POLITECNICO DI TORINO
Repository ISTITUZIONALE

Analysis of the weighted shifted boundary method for the Poisson and Stokes problems

Original
Analysis of the weighted shifted boundary method for the Poisson and Stokes problems / Atallah, N.M., Canuto, C., Scovazzi, G.. - In: COMPUTERS & MATHEMATICS WITH APPLICATIONS. - ISSN 0898-1221. - 205:(2026), pp. 63-85. [10.1016/j.camwa.2025.12.011]

Availability:
This version is available at: 11583/3018361 since: 2026-11-24T14:24:59Z

Publisher:
Elsevier

Published
DOI:10.1016/j.camwa.2025.12.011

Terms of use:

This article is made available under terms and conditions as specified in the corresponding bibliographic description in the repository

Publisher copyright

(Article begins on next page)

28 November 2026

Computers and Mathematics with Applications 205 (2026) 63–85

Contents lists available at ScienceDirect

Computers and Mathematics with Applications

journal homepage: www.elsevier.com/locate/camwa

Analysis of the weighted shifted boundary method for the Poisson and Stokes problems

Nabil M. Atallah [a], Claudio Canuto [b,*], Guglielmo Scovazzi [c]

[a] Lawrence Livermore National Laboratory, 94550, Livermore, California, USA
[b] Dipartimento di Scienze Matematiche, Politecnico di Torino, Corso Duca degli Abruzzi 24, I-10129, Torino, Italy
[c] Department of Civil and Environmental Engineering, Duke University, 27708, Durham, North Carolina, USA

ARTICLE INFO

AMS subject classifications:
Primary 65N30
Secondary 65N12
76D07

Keywords:
Weighted shifted boundary method
Immersed boundary method
Small cut-cell problem
Approximate domain boundaries
Weak boundary conditions
Unfitted finite element methods

ABSTRACT

The Shifted Boundary Method (SBM) belongs to the class of unfitted (or immersed, or embedded) finite element methods, and relies on reformulating the original boundary value problem over a surrogate (approximate) computational domain. Accuracy is maintained by properly *shifting* the *location* and *values* of the boundary conditions. This avoids integration over cut cells and the associated implementation issues. Recently, the Weighted SBM (WSBM) was proposed for the Navier-Stokes equations with free surfaces and the Stokes flow with moving boundaries. The attribute "weighted" in the name WSBM stems from the fact that its variational form is weighted with the elemental volume fraction of active fluid. The motivation for the development of the WSBM was the preservation of the volume of active fluid to a higher degree of accuracy, which in turn resulted in improved stability and robustness characteristics in moving-boundary, time-dependent simulations. In this article, we present the numerical analysis of the WSBM formulations for the Poisson and Stokes problems. We give mathematical conditions under which the bilinear forms defining the discrete variational formulations are uniformly coercive (Poisson problem) or inf-sup stable (Stokes problem). By these results, stability and optimal convergence is proven in the natural norm; L^2-error estimates can also be derived.

1. Introduction

In this article, we provide proofs for well-posedness, numerical stability and convergence of the *Weighted Shifted Boundary Method* (WSBM) for the Poisson and Stokes problems under assumptions analogous to those in [1].

We briefly recall the scope and motivation for the Shifted Boundary Method (SBM), which falls in the broader category of unfitted (or embedded) finite element methods [2–20]. Many of these methods require the geometric construction of the partial elements cut by the embedded boundary, which can be both algorithmically complicated and computationally intensive, due to data structures that are considerably more complex with respect to corresponding fitted finite element methods. Furthermore, integrating the variational forms on the characteristically irregular cut cells may also be difficult and advanced quadrature formulas might need to be employed [21,22].

The SBM approach is instead aimed at avoiding integration over cut cells and all the problematic issues just mentioned, and belongs to the more specific class of approximate domain methods (see [23–31] for some examples). The SBM is built for minimal computational complexity, in that the location where boundary conditions are applied is *shifted* from the true to an approximate

* Corresponding author.
E-mail addresses: atallah1@llnl.gov (N.M. Atallah), claudio.canuto@polito.it (C. Canuto), guglielmo.scovazzi@duke.edu (G. Scovazzi).

https://doi.org/10.1016/j.camwa.2025.12.011
Received 7 February 2025; Received in revised form 8 October 2025; Accepted 18 December 2025
Available online 27 December 2025
0898-1221/© 2025 The Author(s). Published by Elsevier Ltd. This is an open access article under the CC BY-NC-ND license (http://creativecommons.org/licenses/by-nc-nd/4.0/).

(surrogate) boundary, and, at the same time, modified (*shifted*) boundary conditions are applied in order to avoid a reduction in the convergence rates of the overall formulation. In fact, if the boundary conditions associated to the true domain are not appropriately modified on the surrogate domain, only first-order convergence is to be expected. The shifted boundary conditions are appropriately modified by means of Taylor expansions and are applied weakly, using a Nitsche strategy. This process yields a method which is simple, robust, accurate and efficient.

The SBM was proposed in [32] for the Poisson and Stokes flow problems and generalized in [33] to the advection-diffusion and Navier-Stokes equations, and in [34] to hyperbolic conservation laws. In [32] and [33], an analysis of the stability and accuracy of the SBM for the Poisson and advection-diffusion operators was also included, respectively. Further rigorous mathematical analysis was pursued in [1,35] for the Poisson and the Stokes flow problems, and in [36] for the treatment of general domains with corners. The high-order SBM was also presented with its mathematical analysis for the Poisson and Stokes flow problems in [37] and its penalty-free version for Poisson and linear elasticity problems in [38].

More recently, a new version of the SBM, named WSBM, was proposed for the Stokes flow problem with rigid moving boundaries [39] and the Navier-Stokes equations with free-surfaces [40]. The WSBM variational form is weighted with the elemental volume fraction of active fluid, with the goal of preserving with a higher degree of accuracy the total volume of active fluid in the simulations.

The primary motivation for the WSBM was robustness in moving boundary computations, since the standard SBM suffers (like most immersed/embedded boundary methods) from spurious oscillations in time of the average flow pressure, whenever an incompressibility constraint is present. The WSBM was shown in [39,40] to dramatically reduce such oscillations, because it produces much smaller errors, if compared to the standard SBM, in both (a) the total volume of active fluid from time step to time step, and (b) the global mass conservation statement. Furthermore, such errors where found to converge quadratically as the grid is refined, for piecewise-linear finite element interpolations.

Motivated by the improvements that the WSBM introduced, in this work we pursue the study of its mathematical properties, in two simplified, steady-state situations: the Poisson problem and the Stokes problem. From our analysis, an important finding emerged on the choice of edge-averaging operators present in its variational form, an aspect that was overlooked in [40]. Specifically, the stability of the WSBM formulation hinges on a specific choice of edge averages, constructed using a linear combination of the volume fraction on either side of an element edge/face in two/three dimensions, respectively.

The proofs of stability and convergence proposed in this work provide a clear explanation of why the WSBM can be very effective in the robust treatment of complex geometry problems especially when moving boundaries are involved. In addition, we prove optimal convergence rates in natural norms for both the Poisson and Stokes operators. Finally, for the Poisson problem, we prove an enhanced convergence rate in the L^2-norm, similar to that for SBM and other non-fitted methods. An analogous result may be established for the Stokes problem. We also like to note that a preliminary higher-order implementation of the WSBM, in the vein of what was done for SBM in [37], is feasible and was found to produce optimal convergence rates, provided the exact solution is sufficiently smooth. Due to the preliminary nature of these results, additional work is required and will be documented in subsequent publications.

This article is organized as follows: Section 2 introduces the general WSBM notation and its ingredients; the analysis of the WSBM discretization of the Poisson problem is discussed in Section 3, whereas the one of the Stokes problem is presented in Section 4; finally, conclusions are summarized in Section 6.

Notation. Throughout the paper, we will denote by $\|\cdot\|_{m,A}$, $m \geq 0$, the norm of the Sobolev space $H^m(A)$ over the domain A. The seminorm of order $k \leq m$ will be denoted by $|\cdot|_{k,A}$.

2. Surrogate domains and mappings

Let Ω be a bounded domain in $\mathbb{R}^{n_d}$ with Lipschitz boundary. We consider a larger domain D such that $\mathrm{clos}(\Omega) := \Omega \cup \partial\Omega \subseteq D$ and we introduce a family $\mathcal{T}_h(D)$ of admissible and shape-regular partitions of $\mathrm{clos}(D)$, made of triangles ($n_d = 2$) or tetrahedra ($n_d = 3$). Then, we restrict each triangulation by selecting those elements that are contained in $\mathrm{clos}(\Omega)$, i.e., we form

$$\tilde{\mathcal{T}}_h := \{T \in \mathcal{T}_h(D) : T \subset \mathrm{clos}(\Omega)\}.$$

This identifies the *surrogate domain*

$$\tilde{\Omega}_h := \mathrm{int}\Big(\bigcup_{T\in\tilde{\mathcal{T}}_h} T\Big) \subseteq \Omega,$$

with *surrogate boundary* $\tilde{\Gamma}_h := \partial\tilde{\Omega}_h$ and outward-oriented unit normal vector $\tilde{\boldsymbol{n}}$ to $\tilde{\Gamma}_h$. Obviously, $\tilde{\mathcal{T}}_h$ is an admissible and shape-regular triangulation of $\tilde{\Omega}_h$ (see Fig. 1a). We also define the subset of elements that are cut by Γ, namely

$$\mathcal{T}_h^c := \{T \in \mathcal{T}_h(D) : \mathrm{int}(T) \cap \Gamma \neq \emptyset\}, \tag{2.1}$$

and the corresponding *cut domain*

$$\Omega_h^c := \mathrm{int} \bigcup_{T\in\mathcal{T}_h^c} T. \tag{2.2}$$

Consequently, we define

$$\mathcal{T}_h := \tilde{\mathcal{T}}_h \cup \mathcal{T}_h^c, \qquad \Omega_h := \mathrm{int} \bigcup_{T\in\mathcal{T}_h} T, \qquad \hat{\Gamma}_h := \partial\Omega_h. \tag{2.3}$$

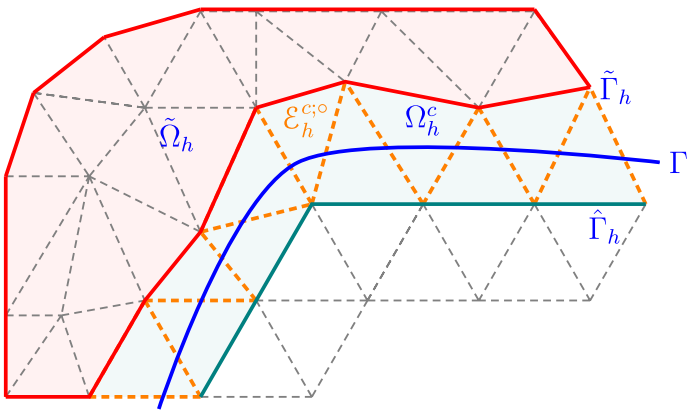

(a) The true domain Ω, the surrogate domain $\tilde{\Omega}_h \subset \Omega$ and their boundaries $\tilde{\Gamma}_h$ and Γ.

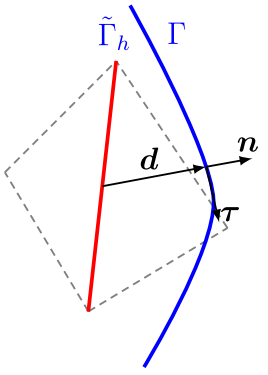

(b) The distance vector $\boldsymbol{d}$, the true normal $\boldsymbol{n}$ and the true tangent $\boldsymbol{\tau}$.

Fig. 1. The surrogate domain, its boundary, and the distance vector $\boldsymbol{d}$.

We also introduce the set of all edges/faces of the triangulations $\tilde{\mathcal{T}}_h$, $\mathcal{T}_h^c$ and $\mathcal{T}_h$, which will be indicated as $\tilde{\mathcal{E}}_h$, $\mathcal{E}_h^c$ and $\mathcal{E}_h$, respectively. We denote the set of edges/faces on $\tilde{\Gamma}_h$ and $\hat{\Gamma}_h$ by $\mathcal{E}_{\tilde{\Gamma}_h} := \{E \in \mathcal{E}_h : E \subset \tilde{\Gamma}_h\}$ and $\mathcal{E}_{\hat{\Gamma}_h} := \{E \in \mathcal{E}_h : E \subset \hat{\Gamma}_h\}$, respectively. The set of interior edges/faces of $\tilde{\mathcal{E}}_h$, $\mathcal{E}_h^c$ and $\mathcal{E}_h$ will be denoted by $\tilde{\mathcal{E}}_h^\circ := \tilde{\mathcal{E}}_h \setminus \mathcal{E}_{\tilde{\Gamma}_h}$, $\mathcal{E}_h^{c;\circ} := \mathcal{E}_h^c \setminus (\mathcal{E}_{\tilde{\Gamma}_h} \cup \mathcal{E}_{\hat{\Gamma}_h})$, and $\mathcal{E}_h^\circ := \mathcal{E}_h \setminus \mathcal{E}_{\hat{\Gamma}_h}$, respectively. Finally, we define $\mathcal{E}_h^a := \mathcal{E}_h^{c;\circ} \cup \mathcal{E}_{\tilde{\Gamma}_h} = \mathcal{E}_h^c \setminus \mathcal{E}_{\hat{\Gamma}_h}$. We also set $\Gamma_h^c := \cup\{E : E \in \mathcal{E}_h^c\}$ and $\Gamma_h^{c;o} := \cup\{E : E \in \mathcal{E}_h^{c;\circ}\}$.

Furthermore, we indicate by h_T (h_T^i, resp.) the circumscribed diameter (inscribed diameter, resp.) of an element $T \in \mathcal{T}_h$ and by h the piecewise constant function in Ω_h such that $h_{|T} = h_T$ for all $T \in \mathcal{T}_h$. Thus, we can introduce the mesh parameters $h_{\Omega_h} := \max_{T \in \mathcal{T}_h} h_T$,

$$h_{\mathcal{E}_h^c} := \max_{T \in \mathcal{T}_h : T \cap \Gamma_h^c \neq \emptyset} h_T, \quad h_\perp := \frac{\text{meas}_{n_d}(T)}{\text{meas}_{n_d-1}(E)} \; \forall E \in \mathcal{E}_h^c, T \cap E \neq \emptyset, T \in \mathcal{T}_h, \quad h_\tau = (h_T \, h_T^i)^{1/2}.$$

2.1. Maps from the surrogate boundaries to the true boundary

We now define the map

$$\tilde{\boldsymbol{M}}_h : \tilde{\Gamma}_h \to \Gamma, \qquad \tilde{\boldsymbol{x}} \mapsto \boldsymbol{x}, \tag{2.4}$$

which associates to any point $\tilde{\boldsymbol{x}} \in \tilde{\Gamma}_h$ on the inner surrogate boundary a point $\boldsymbol{x} = \tilde{\boldsymbol{M}}_h(\tilde{\boldsymbol{x}})$ on the physical boundary Γ. Whenever uniquely defined, the closest-point projection of $\tilde{\boldsymbol{x}}$ upon Γ is a natural choice for $\boldsymbol{x}$, as shown e.g. in Fig. 1b. But more sophisticated choices may be locally preferable; we refer to [36] for more details. Through $\tilde{\boldsymbol{M}}_h$, a distance vector function $\boldsymbol{d}_{\tilde{\boldsymbol{M}}_h}$ can be defined as

$$\boldsymbol{d}_{\tilde{\boldsymbol{M}}_h}(\tilde{\boldsymbol{x}}) := \boldsymbol{x} - \tilde{\boldsymbol{x}} = (\tilde{\boldsymbol{M}}_h - \boldsymbol{I})(\tilde{\boldsymbol{x}}). \tag{2.5}$$

Similarly, we can define maps $\hat{\boldsymbol{M}}_h : \hat{\Gamma}_h \to \Gamma$ and $\boldsymbol{M}_h^c : \Gamma_h^{c;o} \to \Gamma$, which induce corresponding distances $\boldsymbol{d}_{\hat{\boldsymbol{M}}_h}$ and $\boldsymbol{d}_{\boldsymbol{M}_h^c}$. For the sake of simplicity and whenever there is no chance of confusion, we will denote any such map and distance by $\boldsymbol{M}_h$ and $\boldsymbol{d}$, respectively; we may represent a distance as $\boldsymbol{d} = \|\boldsymbol{d}\| \, \boldsymbol{\nu}$, where $\boldsymbol{\nu}$ is a unit vector.

Remark 1. In spite of the segmented/faceted nature of $\tilde{\Gamma}_h$, $\hat{\Gamma}_h$ and $\Gamma_h^{c;o}$, the closest-point projections are typically well defined if the boundary Γ is Lipschitz. For a portion of the boundary where Γ is smooth and only one type of boundary condition is applied, the closest-point projection algorithm will pick $\boldsymbol{d}$ in the direction of the true normal $\boldsymbol{n}$, that is $\boldsymbol{d} = \|\boldsymbol{d}\| \, \boldsymbol{n}$. We refer the reader to the recent analysis in [36], for the general case of general domains with corners and edges. Other strategies in the definition of $\boldsymbol{M}_h$ are possible, among which a level set description of the true boundary, in which $\boldsymbol{d}$ is defined by means of a distance function and its gradient. In our case, we calculate $\boldsymbol{M}_h$ and $\boldsymbol{d}$ using tools developed in [41] and references therein. Most importantly, the methods that we are about to introduce do not depend on how $\boldsymbol{M}_h$ is constructed.

2.2. Extensions of fields from surrogate to true boundary, and Taylor expansions

Through the map $\boldsymbol{M}_h$, it is possible to define the extension $\mathbb{E}_h\psi$ on $\tilde{\Gamma}_h$ of a function ψ initially defined only on Γ, as

$$\mathbb{E}_h\psi(\tilde{\boldsymbol{x}}) := \psi(\boldsymbol{M}_h(\tilde{\boldsymbol{x}})). \tag{2.6}$$

For example, the unit normal vector $\boldsymbol{n}$ and unit tangential vectors $\boldsymbol{\tau}_i$ ($1 < i < n_d - 1$) to the true boundary Γ can be extended to the surrogate boundary $\tilde{\Gamma}_h$ as follows:

$$\mathbb{E}_h\boldsymbol{n}(\tilde{\boldsymbol{x}}) := \boldsymbol{n}(\boldsymbol{M}_h(\tilde{\boldsymbol{x}})), \qquad \mathbb{E}_h\boldsymbol{\tau}_i(\tilde{\boldsymbol{x}}) := \boldsymbol{\tau}_i(\boldsymbol{M}_h(\tilde{\boldsymbol{x}})). \tag{2.7}$$

In what follows, with the purpose of simplifying the notation, we will omit the symbol $\mathbb{E}_h$ in front of $\boldsymbol{n}$ and $\boldsymbol{\tau}_i$, whenever this does not cause confusion. Therefore when we write $\boldsymbol{n}(\tilde{\boldsymbol{x}})$ we actually mean $\mathbb{E}_h\boldsymbol{n}(\tilde{\boldsymbol{x}})$, and similarly for $\boldsymbol{\tau}_i(\tilde{\boldsymbol{x}})$ and $\mathbb{E}_h\boldsymbol{\tau}_i(\tilde{\boldsymbol{x}})$. Analogous extensions can be defined on $\hat{\Gamma}_h$ or $\Gamma_h^{c;o}$. These constructions are particularly useful if we consider the solution u to a partial differential equation and, for example, we desire to define an extension of a boundary condition from the true boundary Γ to a surrogate boundary $\tilde{\Gamma}_h$ (or $\hat{\Gamma}_h$, or $\Gamma_h^{c;o}$). Let us focus on a Dirichlet condition $u = u_D$ on Γ.

To this end, let us introduce a shifting operator S_h from the surrogate boundaries to the physical boundary, as follows. Let $E \in \mathcal{E}_h^c$ be an edge/face sitting on one of the surrogate boundaries, and let $T \in \mathcal{T}_h$ be an element such that $\partial T \supset E$. If v is a continuous function in T which admits a canonical continuous extension $\tilde{v}$ in a neighborhood of T that includes $\boldsymbol{M}_h(E) \subset \Gamma$, then we set

$$(S_h v)(\tilde{\boldsymbol{x}}, T) = \tilde{v}(\boldsymbol{M}_h(\tilde{\boldsymbol{x}})), \qquad \forall \tilde{\boldsymbol{x}} \in E. \tag{2.8}$$

We will apply such operator either to piecewise linear functions $v = v_h$ on the mesh $\mathcal{T}_h$, or to the exact solution $v = u$ of the boundary value problem at hand. In the former case, $v_{h|T}$ is a first-degree polynomial $\tilde{v}_h$, which is obviously defined everywhere in $\mathbb{R}^{n_d}$, hence in particular on Γ, so definition (2.8) makes sense. Note that if E is shared by two elements T_1 and T_2, then in general $(S_h v_h)(\boldsymbol{x}, T_1) \neq (S_h v_h)(\boldsymbol{x}, T_2)$, which justifies the indication of the element among the arguments of $S_h v_h$. In the latter case $v = u$, then u is uniquely defined in $\Omega \cup \Gamma$, hence the indication of the element is not necessary in (2.8). We will actually drop the indication of the element in all cases in which no confusion is possible.

Another important observation for the sequel concerns again piecewise polynomial functions on $\mathcal{T}_h$. Since the remainder in the first-order Taylor expansion of a $\mathbb{P}_1$ function is zero, we can write

$$(S_h v_h)(\tilde{\boldsymbol{x}}, T) = v_h(\tilde{\boldsymbol{x}}) + (\nabla v_h)_{|T} \cdot \boldsymbol{d}(\tilde{\boldsymbol{x}}), \qquad \forall \tilde{\boldsymbol{x}} \in E. \tag{2.9}$$

In general, such a formula would not be true for the exact solution u, due to the presence of a non-vanishing remainder $R(u, \boldsymbol{d})$ in the first-order Taylor expansion of u around $\tilde{\boldsymbol{x}}$.

With the above definitions of $\mathbb{E}_h$ and S_h at hand, we can express the exact Dirichlet condition in the *shifted* form

$$S_h u = \mathbb{E}_h u_D \qquad \text{on any edge/face } E \subset \tilde{\Gamma}_h \cup \hat{\Gamma}_h \cup \Gamma_h^{c;o}, \tag{2.10}$$

which suggests enforcing weakly the *shifted* condition

$$S_h u_h = \mathbb{E}_h u_D \tag{2.11}$$

for the discrete solution u_h we are going to define.

The previous definitions (2.6) and (2.8) extend in a trivial manner to the case of vector-valued functions. In this case, the *shifted* Dirichlet boundary condition reads as follows:

$$\boldsymbol{S}_h \boldsymbol{u} = \mathbb{E}_h \boldsymbol{u}_D \qquad \text{on any edge/face } E \subset \tilde{\Gamma}_h \cup \hat{\Gamma}_h \cup \Gamma_h^{c;o}.$$

3. The WSBM for the Poisson problem

Consider the Poisson problem with non-homogeneous Dirichlet boundary conditions:

$$-\Delta u = f \qquad \text{in } \Omega, \tag{3.1a}$$

$$u = u_D \qquad \text{on } \Gamma = \partial\Omega, \tag{3.1b}$$

where u is the primary variable, u_D its value on the boundary Γ and f a body force.

As a point of departure in the development of the SBM discretization, we just assume Γ to be Lipschitz-continuous, $f \in L^2(\Omega)$ and $u_D \in H^{1/2}(\Gamma)$. Later on, we will make stronger assumptions.

Let us introduce the weighted SBM discretization of this problem. To this end, for an element $T \in \mathcal{T}_h(D)$, let the volume fraction of the active region be defined as

$$\alpha_T = \frac{\text{meas}(T \cap \Omega)}{\text{meas}(T)}. \tag{3.2}$$

Clearly $\alpha_T \in [0, 1]$ and more precisely: $\alpha_T = 1$ if $T \subset \tilde{\Omega}_h$; $0 < \alpha_T < 1$ if $T \subseteq \Omega_h^c$ and $\alpha_T = 0$ if $T \subseteq D \setminus \Omega_h$. We also construct the function $\alpha : D \to \mathbb{R}$ such that $\alpha|_T = \alpha_T$, thus $\alpha \in \mathbb{P}_0(\mathcal{T}_h(D))$ where $\mathbb{P}_0(\mathcal{T}_h(D))$ is the set of piecewise constant functions over $\mathcal{T}_h(D)$.

To motivate our discrete formulation, suppose that u admits an extension $\bar{u}$ in some domain Ω_{ext} containing Ω_h, such that $\bar{u} \in H^2(\Omega_{\text{ext}})$. Then, $\bar{f} := -\Delta\bar{u} \in L^2(\Omega_{\text{ext}})$ turns out to be an extension of f in Ω_{ext}. For simplicity, we will drop the "bar" symbol from now on, still denoting by u and f the extended functions. But it is important to keep into account that these functions satisfy the following extended problem:

$$-\Delta u = f \qquad \text{in } \Omega_{\text{ext}}, \tag{3.3a}$$

$$S_h u = \mathbb{E}_h u_D \quad \text{on } \mathcal{E}_h^c. \tag{3.3b}$$

Next, consider the space $V_h(\Omega_h) = \left\{ v_h \in C^0(\Omega_h) \mid v_{h|T} \in \mathbb{P}_1(T), \forall T \in \mathcal{T}_h \right\}$ of all continuous, piecewise linear functions on the triangulation $\mathcal{T}_h$. Testing (3.3a) against $\alpha\, w_h$, where $w_h \in V_h(\Omega_h)$, and integrating by parts over a generic element $T \in \mathcal{T}_h$ yields

$$(\nabla u, \alpha \nabla w_h)_T - \langle \nabla u \cdot \boldsymbol{n}, \alpha\, w_h \rangle_{\partial T} = (f, \alpha\, w_h)_T. \tag{3.4}$$

Summing over all the elements, we get

$$(\nabla u\,,\,\alpha\,\nabla w_h)_{\Omega_h} - \sum_{T\in\mathcal{T}_h}\langle \nabla u\cdot\boldsymbol{n}\,,\,\alpha\,w_h\rangle_{\partial T} = (f\,,\,\alpha\,w_h)_{\Omega_h}\,. \tag{3.5}$$

To proceed, let us introduce the average operator $\{\,\cdot\,\}_\gamma$ and the jump operator $[\![\,\cdot\,]\!]$ for discontinuous scalars and vector fields across element edge/faces in $\mathcal{E}_h^\circ$:

$$\{p\}_\gamma := \gamma\,p^+ + (1-\gamma)\,p^-\,, \qquad \{\boldsymbol{\beta}\}_\gamma := \gamma\,\boldsymbol{\beta}^+ + (1-\gamma)\,\boldsymbol{\beta}^-\,, \tag{3.6a}$$

$$[\![p]\!] := p^+\boldsymbol{n}^+ + p^-\boldsymbol{n}^-\,, \qquad [\![\boldsymbol{\beta}]\!] := \boldsymbol{\beta}^+\cdot\boldsymbol{n}^+ + \boldsymbol{\beta}^-\cdot\boldsymbol{n}^-, \tag{3.6b}$$

where $\boldsymbol{n}^+$ and $\boldsymbol{n}^-$ indicate opposite normals to an edge or face and, with the purpose of numerical stability, $\gamma\in[0,1]$ is chosen as

$$\gamma := \frac{\alpha^+}{\alpha^+ + \alpha^-}\,, \qquad \text{which implies} \quad 1-\gamma = \frac{\alpha^-}{\alpha^+ + \alpha^-}\,. \tag{3.7}$$

In order to obtain a compact expression of the discrete variational form, it will turn useful to define the above jumps and averages also for the set of edges/faces in $\hat{\Gamma}_h$:

$$\{p\}_\gamma := p\,, \qquad \{\boldsymbol{\beta}\}_\gamma := \boldsymbol{\beta}\,, \tag{3.8a}$$

$$[\![p]\!] := p\,\boldsymbol{n}\,, \qquad [\![\boldsymbol{\beta}]\!] := \boldsymbol{\beta}\cdot\boldsymbol{n}\,. \tag{3.8b}$$

Observe that, by a reordering argument, the following identity holds:

$$\sum_{T\in\mathcal{T}_h}\langle w\,,\,\boldsymbol{v}\cdot\boldsymbol{n}\rangle_{\partial T} = \langle\{w\}_{1-\gamma}\,,\,[\![\boldsymbol{v}]\!]\rangle_{\mathcal{E}_h^\circ} + \langle[\![w]\!]\,,\,\{\boldsymbol{v}\}_\gamma\rangle_{\mathcal{E}_h^\circ} + \langle w\,,\,\boldsymbol{v}\cdot\boldsymbol{n}\rangle_{\hat{\Gamma}_h}\,. \tag{3.9}$$

Using the definitions (3.6) and (3.8) of jump and average operators and inserting identity (3.9) into (3.5), we obtain

$$(\nabla u, \alpha\,\nabla w_h)_{\Omega_h} - \langle\{\alpha\,w_h\}_{1-\gamma}, [\![\nabla u]\!]\rangle_{\mathcal{E}_h^\circ} - \langle[\![\alpha\,w_h]\!], \{\nabla u\}_\gamma\rangle_{\mathcal{E}_h^\circ} - \langle\alpha\,w_h, \nabla u\cdot\boldsymbol{n}\rangle_{\hat{\Gamma}_h} = (f\,,\,\alpha\,w_h)_{\Omega_h}.$$

Enforcing the weak continuity of the normal gradient across $\mathcal{E}_h^\circ$, that is $[\![\nabla u]\!]=0$, (or the conservation of the heat flux) and noting that $w_h\in C^0(\Omega_h)$ and $[\![\alpha]\!]=0$ on $\tilde{\mathcal{E}}_h^\circ$ yield

$$(\nabla u, \alpha\,\nabla w_h)_{\Omega_h} - \langle w_h, \{\nabla u\}_\gamma\cdot[\![\alpha]\!]\rangle_{\mathcal{E}_h^a} - \langle\alpha\,w_h, \nabla u\cdot\boldsymbol{n}\rangle_{\hat{\Gamma}_h} = (f\,,\,\alpha\,w_h)_{\Omega_h}. \tag{3.10}$$

Finally, using the modified definitions of jump and averages in (3.8), we can rewrite (3.10) as

$$(\nabla u, \alpha\,\nabla w_h)_{\Omega_h} - \langle w_h, \{\nabla u\}_\gamma\cdot[\![\alpha]\!]\rangle_{\mathcal{E}_h^c} = (f\,,\,\alpha\,w_h)_{\Omega_h}\,. \tag{3.11}$$

Our discretization method is defined by replacing u by $u_h\in V_h(\Omega_h)$ in the latter expression, and by enforcing the Dirichlet condition (3.1b) on $\mathcal{E}_h^c$ in its *shifted* form (2.10) via Nitsche's method. This yields

$$\begin{aligned}&(\nabla u_h\,,\,\alpha\,\nabla w_h)_{\Omega_h} - \langle w_h\,,\,\{\nabla u_h\}_\gamma\cdot[\![\alpha]\!]\rangle_{\mathcal{E}_h^c} - \langle\{\nabla w_h\}_\gamma\cdot[\![\alpha]\!]\,,\,\{S_h u_h\}_\gamma\rangle_{\mathcal{E}_h^c}\\ &\qquad + \kappa_1\,\langle\{1/h\}_\gamma\,|[\![\alpha]\!]|\,\{S_h u_h\}_\gamma\,,\,\{S_h w_h\}_\gamma\rangle_{\mathcal{E}_h^c} + \kappa_2\,\langle h_{aa}\,[\![\nabla u_h]\!]\,,\,[\![\nabla w_h]\!]\rangle_{\mathcal{E}_h^a}\\ &= (f\,,\,\alpha\,w_h)_{\Omega_h} - \langle\{\nabla w_h\}_\gamma\cdot[\![\alpha]\!]\,,\,\mathbb{E}_h u_D\rangle_{\mathcal{E}_h^c} + \kappa_1\,\langle\{1/h_\perp\}_\gamma\,|[\![\alpha]\!]|\,\mathbb{E}_h u_D\,,\,\{S_h w_h\}_\gamma\rangle_{\mathcal{E}_h^c}\,,\end{aligned} \tag{3.12}$$

where, again with the purpose of achieving numerical stability, we added a *ghost penalty* term $\kappa_2\,\langle h_{aa}\,[\![\nabla u_h]\!]\,,\,[\![\nabla w_h]\!]\rangle_{\mathcal{E}_h^a}$, with $h_{aa} = \frac{2\,h^+h^-}{h^++h^-}$. For the sake of completeness, we rewrite the weighted SBM discretization (3.12) using linear and bilinear forms. *Find* $u_h\in V_h(\Omega_h)$ *such that*

$$a_h(u_h\,,\,w_h) = l_h(w_h) \qquad \forall w_h\in V_h(\Omega_h)\,, \tag{3.13a}$$

where

$$\begin{aligned}a_h(u_h\,,\,w_h) := {}& (\nabla u_h\,,\,\alpha\,\nabla w_h)_{\Omega_h} - \langle w_h\,,\,\{\nabla u_h\}_\gamma\cdot[\![\alpha]\!]\rangle_{\mathcal{E}_h^c} - \langle\{\nabla w_h\}_\gamma\cdot[\![\alpha]\!]\,,\,\{S_h u_h\}_\gamma\rangle_{\mathcal{E}_h^c}\\ &+ \kappa_1\,\langle\{1/h\}_\gamma\,|[\![\alpha]\!]|\,\{S_h u_h\}_\gamma\,,\,\{S_h w_h\}_\gamma\rangle_{\mathcal{E}_h^c} + \kappa_2\,\langle h_{aa}\,[\![\nabla u_h]\!]\,,\,[\![\nabla w_h]\!]\rangle_{\mathcal{E}_h^a}\,,\end{aligned} \tag{3.13b}$$

$$l_h(w_h) := (f\,,\,\alpha\,w_h)_{\Omega_h} - \langle\{\nabla w_h\}_\gamma\cdot[\![\alpha]\!]\,,\,\mathbb{E}_h u_D\rangle_{\mathcal{E}_h^c} + \kappa_1\,\langle\{1/h\}_\gamma\,|[\![\alpha]\!]|\,\mathbb{E}_h u_D\,,\,\{S_h w_h\}_\gamma\rangle_{\mathcal{E}_h^c}\,. \tag{3.13c}$$

3.1. Well-posedness and stability

The first step in our analysis of the SBM is to prove that the form $a_h(u_h\,,\,w_h)$ is uniformly coercive, provided a suitable condition on the mesh $\mathcal{T}_h$ around Γ is fulfilled. This will immediately imply the existence and uniqueness of the solution of the discrete SBM problem. Later on, this coercivity result will be used to prove optimal error convergence in the natural norm.

Assumption 1. The distance function $\boldsymbol{d}$ satisfies the condition

$$\|\boldsymbol{d}/h^*\|_{L^\infty(\mathcal{E}_h^c)} \le \chi\,\zeta\,, \tag{3.14}$$

where $h^* := \min(h^-\,,\,h^+)$ on $\mathcal{E}_h^a$ and $h^* := h$ on $\mathcal{E}_{\hat{\Gamma}_h}$, the constant $\chi\in(0,1)$ is fixed, and $\zeta := 1/(2\,C_I)$, where C_I is the constant in the scaled trace inequality

$$\|h_T^{1/2}w\|_{0,\partial T}^2 \le C_I\,\|w\|_{0,T}^2 \qquad \forall w\in\mathbb{P}_1(T), \quad T\in\mathcal{T}_h\,. \tag{3.15}$$

Remark 2. The condition required by the Assumption can be satisfied by first generating a mesh $\mathcal{T}_h^0$ whose elements, in a neighborhood of Γ, are sufficiently squeezed in the direction perpendicular to the boundary; then, any refinement $\mathcal{T}_h$ of $\mathcal{T}_h^0$ by e.g. newest-vertex bisection will preserve shape regularity and the validity of the condition.

We point out that (3.14) is just a sufficient condition in the proof of coercivity of the form $a_h(u_h\,,\,w_h)$. Practical computations indicate that WSBM works well also when this condition is not satisfied.

To proceed, we need the following technical result.

Lemma 1 (Role of the ghost penalty). *There exist positive constants C_e and γ_{aa}, independent of the mesh size, such that*

$$C_e \| \nabla u_h \|^2_{0,\Omega_h} \le \| \alpha^{1/2} \nabla u_h \|^2_{0,\Omega_h} + \gamma_{aa} \| h_{aa}^{1/2} [\![\nabla u_h]\!] \|^2_{\mathcal{E}_h^a}, \qquad \forall u_h \in V_h(\Omega_h). \tag{3.16}$$

Proof. If $T \subset \tilde{\Omega}_h$, then $\alpha_T = 1$ and there is nothing to prove. If $T = T^+ \subset \Omega^c$ shares an edge E with T^-, then we use the decomposition $\nabla u_h^+ = (\nabla u_h^+ \cdot \boldsymbol{n}^+)\boldsymbol{n}^+ + (\nabla u_h^+ \cdot \boldsymbol{\tau}_i)\boldsymbol{\tau}_i$, where $\boldsymbol{\tau}_i$ are tangent vectors on E, and observe that $\nabla u_h^+ \cdot \boldsymbol{n}^+ = -\nabla u_h^- \cdot \boldsymbol{n}^- + [\![\nabla u_h]\!]$, whereas $\nabla u_h^+ \cdot \boldsymbol{\tau}_i = \nabla u_h^- \cdot \boldsymbol{\tau}_i$; this yields $\|\nabla u_h^+\|^2_{0,T^+} \le C(\|\nabla u_h^-\|^2_{0,T^-} + h_E \|[\![\nabla u_h]\!]\|^2_{0,E})$.

Now, if $T^- \subset \mathrm{clos}(\tilde{\Omega}_h)$, then

$$\begin{aligned}
\|\nabla u_h^+\|^2_{0,T^+} &= \alpha_{T^+} \|\nabla u_h^+\|^2_{0,T^+} + (1-\alpha_{T^+}) \|\nabla u_h^+\|^2_{0,T^+} \\
&\le \alpha_{T^+} \|\nabla u_h^+\|^2_{0,T^+} + C(\|\nabla u_h^-\|^2_{0,T^-} + h_E \|[\![\nabla u_h]\!]\|^2_{0,E}) \\
&= \|\alpha_{T^+}^{1/2} \nabla u_h^+\|^2_{0,T^+} + C(\|\alpha_{T^-}^{1/2} \nabla u_h^-\|^2_{0,T^-} + \|h_E^{1/2} [\![\nabla u_h]\!]\|^2_{0,E}),
\end{aligned}$$

where the last equality follows from $\alpha_{T^-} = 1$. If $T^- \subset \mathrm{clos}(\Omega_h) \setminus \tilde{\Omega}_h$, then one applies a recursion to the minimal chain $T_0, T_1, \dots, T_N$ such that $T_0 = T^+$, $T_1 = T^-$ and $T_N \subset \mathrm{clos}(\tilde{\Omega}_h)$, with N is bounded independently of the mesh size due to the shape regularity of the triangulation. □

Theorem 1 (Coercivity). *Consider the bilinear form $a_h(u_h,\, w_h)$ defined in (3.13b). If the parameters κ_1 and κ_2 are sufficiently large and if Assumption 1 is valid, then there exists a constant $C_a > 0$ independent of the mesh size, such that*

$$a_h(u_h\,,\,u_h) \ge C_a \| u_h \|_a^2 \qquad \forall u_h \in V_h(\Omega_h)\,, \tag{3.17}$$

where $\| u_h \|_a^2 := \| \nabla u_h \|^2_{0,\Omega_h} + \| \{1/h\}_\gamma^{1/2} |[\![\alpha]\!]|^{1/2} \{S_h u_h\}_\gamma \|^2_{0,\mathcal{E}_h^c}$.

Proof. By substitution, recalling the equivalent expression for $S_h u_h$ given in (2.9), we have

$$\begin{aligned}
a_h(u_h\,,\,u_h) = {} & \| \alpha^{1/2} \nabla u_h \|^2_{0,\Omega_h} + \kappa_1 \| \{1/h\}_\gamma^{1/2} |[\![\alpha]\!]|^{1/2} S_h u_h \|^2_{0,\mathcal{E}_h^c} \\
& - 2\langle \{\nabla u_h\}_\gamma \cdot [\![\alpha]\!]\,,\, \{S_h u_h\}_\gamma \rangle_{\mathcal{E}_h^c} + \langle \{\nabla u_h\}_\gamma \cdot [\![\alpha]\!]\,,\, \{\nabla u_h \cdot \boldsymbol{d}\}_\gamma \rangle_{\mathcal{E}_h^c} + \kappa_2 \| h_{aa}^{1/2} [\![\nabla u_h]\!] \|^2_{\mathcal{E}_h^a}\,.
\end{aligned} \tag{3.18}$$

Using Young's ϵ-inequality and inequality (3.15), and noting that $|\alpha^+ - \alpha^-| \le \alpha^+ + \alpha^-$, $4\,\alpha^+\alpha^- \le (\alpha^+ + \alpha^-)^2$ and $|\alpha^+ - \alpha^-| \le 1$, the last two terms above can be bounded as

$$\begin{aligned}
& 2\,|\langle \{\nabla u_h\}_\gamma \cdot [\![\alpha]\!]\,,\, \{S_h u_h\}_\gamma \rangle_{\mathcal{E}_h^c}| \qquad (3.19a) \\
& \quad \le 2 \left| \langle \frac{\alpha^+(\alpha^+ - \alpha^-)}{\alpha^+ + \alpha^-} \nabla u_h^+ \cdot \boldsymbol{n}^+ - \frac{\alpha^-(\alpha^+ - \alpha^-)}{\alpha^+ + \alpha^-} \nabla u_h^- \cdot \boldsymbol{n}^-\,,\, \{S_h u_h\}_\gamma \rangle_{\mathcal{E}_h^c} \right| \\
& \quad \le \epsilon_1 \left(\left\| \sqrt{\frac{\alpha^+ h^+ |\alpha^+ - \alpha^-|}{\alpha^+ + \alpha^-}} \nabla u_h^+ \right\|^2_{0,\mathcal{E}_h^c} + \left\| \sqrt{\frac{\alpha^- h^- |\alpha^+ - \alpha^-|}{\alpha^+ + \alpha^-}} \nabla u_h^- \right\|^2_{0,\mathcal{E}_h^c} \right) \\
& \qquad + \frac{1}{\epsilon_1} \left\| \sqrt{|\alpha^+ - \alpha^-|} \{1/h\}_\gamma^{1/2} \{S_h u_h\}_\gamma \right\|^2_{0,\mathcal{E}_h^c} \\
& \quad \le \epsilon_1 \sum_{T \in \mathcal{T}_h} \| \sqrt{\alpha\, h}\, \nabla u_h \|^2_{0,\partial T} + \frac{1}{\epsilon_1} \| \{1/h\}_\gamma^{1/2} |[\![\alpha]\!]|^{1/2} \{S_h u_h\}_\gamma \|^2_{0,\mathcal{E}_h^c} \\
& \quad \le C_I\, \epsilon_1 \| \alpha^{1/2} \nabla u_h \|^2_{0,\Omega_h} + \frac{1}{\epsilon_1} \| \{1/h\}_\gamma^{1/2} |[\![\alpha]\!]|^{1/2} \{S_h u_h\}_\gamma \|^2_{0,\mathcal{E}_h^c}\,, \qquad (3.19b)
\end{aligned}$$

$$\begin{aligned}
|\langle \{\nabla u_h\}_\gamma \cdot [\![\alpha]\!]\,,\, \{\nabla u_h \cdot \boldsymbol{d}\}_\gamma \rangle_{\mathcal{E}_h^c}| \le {} & \left\| \sqrt{\frac{|\alpha^+ - \alpha^-|}{\alpha^+ + \alpha^-} \frac{\alpha^+}{\alpha^+ + \alpha^-} \alpha^+ h^+}\, \nabla u_h^+ \right\|^2_{0,\mathcal{E}_h^c} \|\boldsymbol{d}/h^+\|_{L^\infty(\mathcal{E}_h^c)} \\
& + \left\| \sqrt{\frac{|\alpha^+ - \alpha^-|}{\alpha^+ + \alpha^-} \frac{\alpha^-}{\alpha^+ + \alpha^-} \alpha^- h^-}\, \nabla u_h^- \right\|^2_{0,\mathcal{E}_h^c} \|\boldsymbol{d}/h^-\|_{L^\infty(\mathcal{E}_h^c)} \\
& + 2 \left\| \frac{\boldsymbol{d}}{\sqrt{h^+ h^-}} \right\|_{L^\infty(\mathcal{E}_h^c)} \left\| \sqrt{\frac{\alpha^- |\alpha^+ - \alpha^-| \alpha^+ h^+}{(\alpha^+ + \alpha^-)^2}}\, \nabla u_h^+ \right\|_{0,\mathcal{E}_h^c} \left\| \sqrt{\frac{\alpha^+ |\alpha^+ - \alpha^-| \alpha^- h^-}{(\alpha^+ + \alpha^-)^2}}\, \nabla u_h^- \right\|_{0,\mathcal{E}_h^c} \\
\le {} & 2 \|\boldsymbol{d}/h^*\|_{L^\infty(\mathcal{E}_h^c)} \left(\| \sqrt{\alpha^+ h^+}\, \nabla u_h^+ \|^2_{0,\mathcal{E}_h^c} + \| \sqrt{\alpha^- h^-}\, \nabla u_h^- \|^2_{0,\mathcal{E}_h^c} \right)
\end{aligned}$$

$$\leq\ 2\,C_I\,\|\boldsymbol{d}/h^*\|_{L^\infty(\mathcal{E}_h^c)}\,\|\alpha^{1/2}\,\nabla u_h\|^2_{0,\Omega_h}\,. \tag{3.19c}$$

Using Assumption 1, we have

$$\begin{aligned}a_h(u_h\,,\,u_h) \geq\ & (1-C_I\,\epsilon_1-\chi)\,\|\,\alpha^{1/2}\,\nabla u_h\,\|^2_{0,\Omega_h}\\ &+(\kappa_1-1/\epsilon_1)\,\|\{1/h\}_\gamma^{1/2}|[\![\alpha]\!]|^{1/2}\{S_h u_h\}_\gamma\,\|^2_{0,\mathcal{E}_h^c}+\kappa_2\,\|\,h_{aa}^{1/2}\,[\![\nabla u_h]\!]\|^2_{\mathcal{E}_h^a}\,.\end{aligned}$$

Choosing $\epsilon_1=(1-\chi)/(2\,C_I)$ and $\kappa_2\geq\gamma_{aa}/2$, from Lemma 1 we obtain

$$a_h(u_h\,,\,u_h)\geq\ \frac{1}{2}\,\|\,C_e^{1/2}\,\nabla u_h\,\|^2_{0,\Omega_h}+\big(\kappa_1-2C_I/(1-\chi)\big)\|\,\{1/h\}_\gamma^{1/2}\,|[\![\alpha]\!]|^{1/2}\,\{S_h u_h\}_\gamma\,\|^2_{0,\mathcal{E}_h^c}\,. \tag{3.20}$$

Picking $\kappa_1\geq 2C_I/(1-\chi)$ yields (3.17) with $C_a=\ \min\big(C_e/2\,,\,\kappa_1-2C_I/(1-\chi)\big)\,.$ □

3.2. Consistency and convergence analysis

In view of the convergence analysis, we first enlarge the space on which the bilinear form $a_h(\cdot,\cdot)$ is defined, and prove its continuity on such larger space. To this end, we introduce the infinite dimensional space

$$V(\Omega_h;\mathcal{T}_h)\ :=V_h(\Omega_h)+H^2(\Omega_h)\ \subset H^2(\Omega_h;\mathcal{T}_h)\ , \tag{3.21}$$

which contains the finite dimensional space $V_h(\Omega_h)$. Here $H^2(\Omega_h;\mathcal{T}_h):=\prod_{T\in\mathcal{T}_h}H^2(T)$ with broken (squared) norm $\|\cdot\|^2_{2,\Omega_h,\mathcal{T}_h}:=\sum_{T\in\mathcal{T}_h}\|\cdot\|^2_{2,T}$. It is easily checked that the form $a_h(\cdot,\cdot)$ is well-defined also on the space $V(\Omega_h;\mathcal{T}_h)\times V(\Omega_h;\mathcal{T}_h)$. We associate to $V(\Omega_h;\mathcal{T}_h)$ the norm

$$\|\,v\,\|_{V(\Omega_h;\mathcal{T}_h)}\ :=\|\,v\,\|_a+|\,h\,v\,|_{2,\Omega_h,\mathcal{T}_h}\,, \tag{3.22}$$

and we note that if $v_h\in V_h(\Omega_h)$, then $\|\,v_h\,\|_{V(\Omega_h;\mathcal{T}_h)}=\|\,v\,\|_a$.

Proposition 1 (Boundedness). *There exists a constant $C_{\mathcal{A}}>0$, independent of the mesh size, such that*

$$|a_h(v,w)|\leq C_{\mathcal{A}}\,\|\,v\,\|_{V(\Omega_h;\mathcal{T}_h)}\,\|\,w\,\|_{V(\Omega_h;\mathcal{T}_h)}\,,\qquad\forall v,w\in V(\Omega_h;\mathcal{T}_h)\,. \tag{3.23}$$

Proof. Adding and subtracting $\langle\{S_h w\}_\gamma\,,\,\{\nabla v\}_\gamma\cdot[\![\alpha]\!]\rangle_{\mathcal{E}_h^c}$, we get

$$\begin{aligned}a_h(v\,,\,w)=\ & (\nabla v\,,\,\alpha\,\nabla w)_{\Omega_h}+\langle\{S_h w-w\}_\gamma\,,\,\{\nabla v\}_\gamma\cdot[\![\alpha]\!]\rangle_{\mathcal{E}_h^c}-\langle\{S_h w\}_\gamma\,,\,\{\nabla v\}_\gamma\cdot[\![\alpha]\!]\rangle_{\mathcal{E}_h^c}\\ &-\langle\{\nabla w\}_\gamma\cdot[\![\alpha]\!],\{S_h v\}_\gamma\rangle_{\mathcal{E}_h^c}+\kappa_1\,\langle\{1/h\}_\gamma|[\![\alpha]\!]|\{S_h v\}_\gamma,\{S_h w\}_\gamma\rangle_{\mathcal{E}_h^c}+\kappa_2\,\langle h_{aa}\,[\![\nabla v]\!]\,,\,[\![\nabla w]\!]\rangle_{\mathcal{E}_h^a}\,.\end{aligned}$$

By Taylor expansion, we write $S_h w-w=\nabla w\cdot\boldsymbol{d}+R_h w$, where $R_h w$ is the remainder. Applying Proposition 3 in [36], one can prove that there exists a constant $C_{rem}>0$ independent of the meshsize such that

$$\|h^{-1/2}\,\{R_h w\}_\gamma\|_{0,\mathcal{E}_h^c}\leq C_{rem}\,|\,h\,w\,|_{2,\Omega_h,\mathcal{T}_h}\,. \tag{3.24}$$

Thus, using the Cauchy-Schwartz inequality, the generalized scaled trace inequality

$$\|h_T^{1/2}v\|^2_{0,\partial T}\leq C_I\big(\|v\|^2_{0,T}+|h_T\nabla v|^2_{0,T}\big)\qquad\forall v\in H^1(T),\quad T\in\mathcal{T}_h\,, \tag{3.25}$$

and recalling that $\alpha\in[0,1]$, we obtain:

$$\begin{aligned}|a_h(v\,,\,w_h)|\leq\ & \|\,\alpha^{1/2}\,\nabla v\,\|_{0,\Omega_h}\,\|\,\alpha^{1/2}\,\nabla w\,\|_{0,\Omega_h}\\ &+2\,C_I^{1/2}\Big(\|\,\nabla v\,\|_{0,\Omega_h}+|\,h\,v\,|_{2,\Omega_h,\mathcal{T}_h}\Big)\,(2\,C_I^{1/2}\|\,\nabla w\,\|_{0,\Omega_h}+C_{rem}\,|\,h\,w\,|_{2,\Omega_h,\mathcal{T}_h})\\ &+2\,C_I^{1/2}\Big(\|\,\nabla v\,\|_{0,\Omega_h}+|\,h\,v\,|_{2,\Omega_h,\mathcal{T}_h}\Big)\,\|\,\{1/h\}_\gamma^{1/2}|[\![\alpha]\!]|^{1/2}\{S_h w\}_\gamma\|_{0,\mathcal{E}_h^c}\\ &+2\,C_I^{1/2}\,\|\,\{1/h\}_\gamma^{1/2}|[\![\alpha]\!]|^{1/2}\{S_h v\}_\gamma\|_{0,\mathcal{E}_h^c}\,\|\,\nabla w\,\|_{0,\Omega_h}\\ &+\kappa_1\|\,\{1/h\}_\gamma^{1/2}|[\![\alpha]\!]|^{1/2}\{S_h v\}_\gamma\|_{0,\mathcal{E}_h^c}\,\|\,\{1/h\}_\gamma^{1/2}|[\![\alpha]\!]|^{1/2}\{S_h w\}_\gamma\|_{0,\mathcal{E}_h^c}\\ &+4\,\kappa_2\,C_I\Big(\|\,\nabla v\,\|_{0,\Omega_h}+|\,h\,v\,|_{2,\Omega_h,\mathcal{T}_h}\Big)\Big(\|\,\nabla w\,\|_{0,\Omega_h}+|\,h\,w\,|_{2,\Omega_h,\mathcal{T}_h}\Big)\\ \leq\ & C_{\mathcal{A}}\,\|\,v\,\|_{V(\Omega_h;\mathcal{T}_h)}\,\|\,w\,\|_{V(\Omega_h;\mathcal{T}_h)}\,,\end{aligned} \tag{3.26}$$

with $C_{\mathcal{A}}=1+2C_I^{1/2}(2C_I^{1/2}+C_{rem})+4C_I^{1/2}+\kappa_1+4\,\kappa_2\,C_I$. □

At this point, it is convenient to introduce an enclosing extended domain Ω_{ext}, such that $\text{clos}(\Omega_h)\subset\Omega_{\text{ext}}$. This is important in the study of convergence of our method, whenever $\Omega_h\not\subseteq\Omega$. To this end, we recall the following extension result.

Proposition 2 (Existence of extensions). *There exist an extension $\bar{u}$ of u in Ω_{ext} and an extension $\bar{f}$ of f in Ω_{ext}, such that:*

i) $-\Delta\bar{u}=\bar{f}$ *in* Ω_{ext}*; and*
ii) if $u\in H^2(\Omega)$*, then* $\bar{u}\in H^2(\Omega_{\text{ext}})$*, with* $\|\bar{u}\|_{2,\Omega_{\text{ext}}}\leq C\,\|u\|_{2,\Omega}$.

Proof. Thanks to the assumption of Lipschitz continuity of $\partial\Omega$, the existence of a continuous extension operator from $H^2(\Omega)$ to $H^2(\Omega_{\text{ext}})$ follows from classical results on Sobolev spaces (see, e.g. [42]). The extension of f is obtained by setting $\bar{f} := -\Delta\bar{u}$. □

This results suggests us to pose the following regularity assumption on the exact solution u of our Dirichlet problem:

Assumption 2. The solution of the Poisson problem (3.1) satisfies $u \in H^2(\Omega)$.

The assumption, which is fulfilled provided Γ is of class C^2 or Ω is convex, $f \in L^2(\Omega)$ and $u_D \in H^{3/2}(\Gamma)$, allows us to keep technicalities at a minimum in the subsequent consistency and convergence analysis. However, we mention that it can be weakened to include domains with a finite number of corners and/or edges [36], at the expense of more cumbersome mathematical arguments.

The following consistency result, first pointed out by [38] for SBM methods, is the key tool to establish convergence and error estimates.

Lemma 2 (Galerkin orthogonality). *Assume that the right-hand side (3.13c) uses the extension $\bar{f}$ from Proposition 2. Then, the corresponding extended solution $\bar{u}$ satisfies*

$$a_h(\bar{u} - u_h, w_h) = 0\,, \qquad \forall w_h \in V_h(\Omega_h). \tag{3.27}$$

Proof. By Proposition 2 *i)*, the functions $\bar{u}$ and $\bar{f}$ satisfy eq. (3.11), i.e.,

$$(\nabla\bar{u}, \alpha\,\nabla w_h)_{\Omega_h} - \langle w_h, \{\nabla u\}_\gamma \cdot [\![\alpha]\!]\rangle_{\mathcal{E}_h^c} = (\bar{f}\,,\, \alpha\, w_h)_{\Omega_h}\,.$$

In addition, by (2.11) $\bar{u}$ satisfies the shifted boundary condition $S_h\bar{u} = \mathbb{E}_h u_D$ on $\mathcal{E}_h^c$, whereas by Assumption 2 and Proposition 2 *ii)* the gradient jumps of $\bar{u}$ vanish, implying the vanishing of the ghost penalty term $\kappa_2\,\langle h_{aa}\,[\![\nabla\bar{u}]\!]\,,\,[\![\nabla w_h]\!]\rangle_{\mathcal{E}_h^a}$. Hence, $\bar{u}$ satisfies

$$a_h(\bar{u}, w_h) = l_h(w_h)\,, \qquad \forall w_h \in V_h(\Omega_h).$$

Subtracting (3.13), we get the result. □

Galerkin orthogonality, together with the coercivity of the form $a_h(\cdot,\cdot)$ in $V_h(\Omega_h)$ and its continuity in $V(\Omega_h;\mathcal{T}_h)$, yields the following well-known Céa-type error estimate.

Proposition 3 (Abstract error bound). *Under the previous assumptions, it holds*

$$\|\bar{u} - u_h\|_{V(\Omega_h;\mathcal{T}_h)} \le \left(1 + \frac{C_{\mathcal{A}}}{C_a}\right) \inf_{w_h \in V_h(\Omega_h)} \|\bar{u} - w_h\|_{V(\Omega_h;\mathcal{T}_h)}\,. \tag{3.28}$$

The right-hand side in (3.28) can be estimated as follows.

Proposition 4 (Approximability). *There exists a constant $C_{\text{APP}} > 0$, independent of the mesh size, such that*

$$\inf_{w_h \in V_h(\Omega_h)} \|\bar{u} - w_h\|_{V(\Omega_h;\mathcal{T}_h)} \le C_{\text{APP}}\, h_{\Omega_h}\, |\bar{u}|_{2,\Omega_h}\,. \tag{3.29}$$

Proof. Let us choose $w_h = \mathcal{I}_h\bar{u}$, where $\mathcal{I}_h\bar{u}$ is the piecewise-linear Scott-Zhang quasi-interpolant ([43]) of $\bar{u}$ on the triangulation $\mathcal{T}_h$. Consequently, setting $\bar{e} := \bar{u} - \mathcal{I}_h\bar{u}$, the goal is to estimate

$$\|\,\bar{e}\,\|_{V(\Omega_h;\mathcal{T}_h)} = \|\,\nabla\bar{e}\,\|_{0,\Omega_h} + \|\,\{1/h\}_\gamma^{1/2}\,|[\![\alpha]\!]|^{1/2}\,\{S_h\bar{e}\}_\gamma\,\|_{0,\mathcal{E}_h^c} + |\,h\,\bar{e}\,|_{2,\Omega_h,\mathcal{T}_h}\,. \tag{3.30}$$

The first norm can be bounded by the classical Scott-Zhang error estimates [43], whereas the third one coincides with $|\,h\,\bar{u}\,|_{2,\Omega_h}$, so we get $\|\,\nabla\bar{e}\,\|_{0,\Omega_h} + |\,h\,\bar{e}\,|_{2,\Omega_h,\mathcal{T}_h} \le C_1\, h_{\Omega_h}\,|\bar{u}|_{2,\Omega_h}$. Focussing now on the second norm, we observe that its square is a sum of integrals over the edges/faces $E \in \mathcal{E}_h^c$. In turn, each of them may be bounded (up to constants related to the local equivalence of mesh-sizes) by the quantity $\|h_E^{-1/2} S_h\bar{e}\|_{0,E}^2$, since h scales as h_E by the shape regularity of the mesh. Let T_E be an element containing E as an edge/face, and let $\Gamma_E = \boldsymbol{M}_h(E) \subseteq \Gamma$ be the image of E under the mapping $\boldsymbol{M}_h$. Then,

$$\int_E h_E^{-1}\,|S_h\bar{e}|^2 \le h_E^{-1}\,|E|\,\|\bar{e}\|^2_{L^\infty(\Gamma_E)} \le c_1 h_E^{n_d-2}\|\bar{e}\|^2_{L^\infty(T_E)}\,.$$

Now, one has $\|\bar{e}\|_{L^\infty(T_E)} \le c_2 h_{T_E}^{2-n_d/2}|\bar{u}|_{2,\omega(T_E)}$ by the approximation results of the Scott-Zhang operator, where $\omega(T_E)$ is the patch of elements intersecting T_E (see, e.g., [44, Proposition 3.5]). Thus,

$$\int_E h_E^{-1}\,|S_h\bar{e}|^2 \le c_3 h_{T_E}^2\,|\bar{u}|^2_{2,\omega(T_E)}\,.$$

Summing-up over $E \in \mathcal{E}_h^c$, we arrive at $\|\{1/h\}_\gamma^{1/2}|[\![\alpha]\!]|^{1/2}\,\{S_h\bar{e}\}_\gamma\,\|_{0,\mathcal{E}_h^c} \le C h_{\Omega_h}\,|\bar{u}|_{2,\Omega_h}$, which completes the proof. □

Concatenating Propositions 2–4 and using the triangle inequality, we arrive at the final error estimate in the natural norm.

Theorem 2 (Convergence in the natural norm). *Under Assumptions 1 and 2, the numerical solution u_h of the SBM (3.13a) satisfies the following error estimate:*

$$\|\,\bar{u} - u_h\,\|_{V(\Omega_h;\mathcal{T}_h)} \le C\, h_{\Omega_h}\,\|u\|_{2,\Omega}\,, \tag{3.31}$$

where $C > 0$ is a constant independent of the mesh size and the solution.

3.3. L^2-error estimate by a duality argument

In this section, we provide an estimate of a weighted L^2-norm of the discretization error $\bar{u} - u_h$, by adapting the classical Aubin-Nitsche argument to the present situation. We start with the following preliminary result, which quantifies the symmetry discrepancy in the bilinear form $a_h(\cdot\,,\cdot)$. It follows by substitution in (3.13b).

Lemma 3 (Non-symmetry of a_h). *For any $v, w \in V(\Omega_h; \mathcal{T}_h)$, it holds*

$$a_h(w\,,\,v) - a_h(v\,,\,w) = \langle \{\nabla w\}_\gamma \cdot [\![\alpha]\!]\,, \{S_h v\}_\gamma - v\rangle_{\mathcal{E}_h^c} + \langle \{\nabla v\}_\gamma \cdot [\![\alpha]\!]\,, w - \{S_h w\}_\gamma\rangle_{\mathcal{E}_h^c}\,. \tag{3.32}$$

The main result of this section is as follows.

Theorem 3 (Enhanced L^2-error estimate). *Assume the hypotheses of Theorem 2 to hold. Then, the solution u_h of (3.13) satisfies the following error estimate:*

$$\|\,\alpha\,(\bar{u} - u_h)\,\|_{0,\Omega_h} \le C\, h_{\Omega_h}^{3/2} \|u\|_{2,\Omega}\,, \tag{3.33}$$

where C is a positive constant independent of mesh size.

Proof. Let us fix an auxiliary domain Ω_{aux} with the following properties: $\Omega_h \subseteq \Omega_{\text{aux}}$, Ω_{aux} is either convex or has a C^2 boundary Γ_{aux}, and there exists a constant $C_{\text{aux}} > 0$ independent of the meshsize such that $\text{dist}(\hat{\Gamma}_h, \Gamma_{\text{aux}}) \le C_{\text{aux}} h_{\Omega_h}$. Note that there exists a constant $c > 0$ independent of the meshsize such that $\text{meas}(\Omega_{\text{aux}}) \le c\,\text{meas}(\Omega_h)$.

Let us set $e_{\bar{u}} := \bar{u} - u_h$, which is defined in Ω_h, and let us denote by z the function $\alpha\, e_{\bar{u}}$ extended by zero outside Ω_h. Let ψ be the solution to the following homogeneous Dirichlet problem on Ω_{aux}:

$$-\Delta\psi = z \qquad \text{in } \Omega_{\text{aux}}\,, \tag{3.34a}$$

$$\psi = 0 \qquad \text{on } \Gamma_{\text{aux}}\,. \tag{3.34b}$$

The assumptions on Ω_{aux} together with the fact that $z \in L^2(\Omega_{\text{aux}})$ imply the regularity result $\psi \in H^2(\Omega_{\text{aux}}) \cap H_0^1(\Omega_{\text{aux}})$, and the existence of a constant $Q > 0$ independent of z and the mesh size such that

$$\|\,\psi\,\|_{2,\Omega_h} \le \|\,\psi\,\|_{2,\Omega_{\text{aux}}} \le Q \|\,z\,\|_{0,\Omega_{\text{aux}}} = Q \|\,\alpha\, e_{\bar{u}}\,\|_{0,\Omega_h}\,. \tag{3.35}$$

Next, consider any $q \in V(\Omega_h; \mathcal{T}_h)$ and note that ψ satisfies the following variational equation

$$(z\,,\,\alpha\, q)_{\Omega_h} = -(\Delta\psi\,,\,\alpha\, q)_{\Omega_h} = (\nabla\psi\,,\,\alpha\,\nabla q)_{\Omega_h} - \langle q\,,\,\{\nabla\psi\}_\gamma \cdot [\![\alpha]\!]\rangle_{\mathcal{E}_h^c}\,, \tag{3.36}$$

which, by adding and subtracting suitable terms and observing that the ghost penalty term $\kappa_2 \langle h_{aa} [\![\nabla\psi]\!]\,, [\![\nabla q]\!]\rangle_{\mathcal{E}_h^a} = 0$ by the H^2-regularity of ψ, can be written as

$$(z\,,\,\alpha\, q)_{\Omega_h} = a_h(\psi, q) + \langle \{\nabla q\}_\gamma \cdot [\![\alpha]\!]\,, \{S_h\psi\}_\gamma\rangle_{\mathcal{E}_h^c} - \kappa_1 \langle \{1/h\}_\gamma\, |[\![\alpha]\!]|\, \{S_h\psi\}_\gamma\,, \{S_h q\}_\gamma\rangle_{\mathcal{E}_h^c}\,.$$

Applying Lemma 3 with $w = \psi$ and $v = q$ yields

$$\begin{aligned}(z\,,\,\alpha\, q)_{\Omega_h} = a_h(q, \psi) &+ \langle \{\nabla q\}_\gamma \cdot [\![\alpha]\!]\,, \psi\rangle_{\mathcal{E}_h^c} + \langle \{\nabla\psi\}_\gamma \cdot [\![\alpha]\!]\,, \{S_h q\}_\gamma - q\rangle_{\mathcal{E}_h^c} \\ &+ \kappa_1 \langle \{1/h\}_\gamma\, |[\![\alpha]\!]|\, \{S_h\psi\}_\gamma\,, \{S_h q\}_\gamma\rangle_{\mathcal{E}_h^c}\,.\end{aligned}$$

Now we choose $q = e_{\bar{u}}$, and we exploit the Galerkin orthogonality property (3.27) to write $a_h(e_{\bar{u}}, \psi) = a_h(e_{\bar{u}}, \psi - \psi^I)$, where $\psi^I \in V_h(\Omega_h)$ is the Lagrange interpolant of ψ. We thus have

$$\begin{aligned}\|\,\alpha\, e_{\bar{u}}\,\|_{0,\Omega_h}^2 = a_h(e_{\bar{u}}, \psi - \psi^I) &+ \langle \{\nabla e_{\bar{u}}\}_\gamma \cdot [\![\alpha]\!]\,, \psi\rangle_{\mathcal{E}_h^c} + \langle \{\nabla\psi\}_\gamma \cdot [\![\alpha]\!]\,, \{S_h e_{\bar{u}} - e_{\bar{u}}\}_\gamma\rangle_{\mathcal{E}_h^c} \\ &+ \kappa_1 \langle \{1/h\}_\gamma\, |[\![\alpha]\!]|\, \{S_h\psi\}_\gamma\,, \{S_h e_{\bar{u}}\}_\gamma\rangle_{\mathcal{E}_h^c}\,.\end{aligned} \tag{3.37}$$

We proceed bounding each addend on the right-hand side. To treat the first term, we use Proposition 1, the interpolation inequality $\|\psi - \psi^I\|_{V(\Omega_h;\mathcal{T}_h)} \le C_{APP}\, h_{\Omega_h} |\psi|_{2,\Omega_h}$, which can be derived as in the proof of Proposition 4, and the bound (3.35). This yields

$$|a_h(e_{\bar{u}}, \psi - \psi^I)| \le C_{\mathcal{A}}\, \|\,e_{\bar{u}}\,\|_{V(\Omega_h;\mathcal{T}_h)}\, \|\,\psi - \psi^I\,\|_{V(\Omega_h;\mathcal{T}_h)} \le C_1\, h_{\Omega_h} \|\,e_{\bar{u}}\,\|_{V(\Omega_h;\mathcal{T}_h)} \|\,\alpha\, e_{\bar{u}}\,\|_{0,\Omega_h}\,. \tag{3.38}$$

To handle the second term, we recall that ψ vanishes on Γ_{aux}. Denoting by $S_h^\sharp$ an auxiliary shift operator from $\mathcal{E}_h^c$ to Γ_{aux} (associated with a mapping $\boldsymbol{x} \in \mathcal{E}_h^c \mapsto \boldsymbol{M}_h^\sharp(\boldsymbol{x}) \in \Gamma_{\text{aux}}$, such as e.g. the closest point projection), we thus have $S_h^\sharp \psi = 0$, i.e., by Taylor expansion $\psi + \nabla\psi \cdot \boldsymbol{d}^\sharp + R_h^\sharp \psi = 0$, where $\boldsymbol{d}^\sharp = \boldsymbol{M}_h^\sharp(\boldsymbol{x}) - \boldsymbol{x}$ is the shift distance vector, and $R_h^\sharp \psi$ is the remainder. Thus,

$$\begin{aligned}&\langle \{\nabla e_{\bar{u}}\}_\gamma \cdot [\![\alpha]\!]\,, \psi\rangle_{\mathcal{E}_h^c} = -\langle \{\nabla e_{\bar{u}}\}_\gamma \cdot [\![\alpha]\!]\,, \{\nabla\psi \cdot \boldsymbol{d}^\sharp\}_\gamma\rangle_{\mathcal{E}_h^c} - \langle \{\nabla e_{\bar{u}}\}_\gamma \cdot [\![\alpha]\!]\,, \{R_h^\sharp\psi\}_\gamma\rangle_{\mathcal{E}_h^c} \\ &= -\langle h^{1/2} \{\nabla e_{\bar{u}}\}_\gamma \cdot [\![\alpha]\!]\,, h^{-1/2} \{\nabla\psi \cdot \boldsymbol{d}^\sharp\}_\gamma\rangle_{\mathcal{E}_h^c} - \langle h^{1/2} \{\nabla e_{\bar{u}}\}_\gamma \cdot [\![\alpha]\!]\,, h^{-1/2} \{R_h^\sharp\psi\}_\gamma\rangle_{\mathcal{E}_h^c} \\ &= -\sum_{a,b\in\{-,+\}} \gamma^a\gamma^b \langle h^{1/2} \nabla e_{\bar{u}}^a \cdot [\![\alpha]\!]\,, h^{-1/2} \nabla\psi^b \cdot \boldsymbol{d}^\sharp\rangle_{\mathcal{E}_h^c} - \sum_{a,b\in\{-,+\}} \gamma^a\gamma^b \langle h^{1/2} \nabla e_{\bar{u}}^a \cdot [\![\alpha]\!]\,, h^{-1/2} R_h^\sharp \psi^b\rangle_{\mathcal{E}_h^c} \\ &=: I_{21} + I_{22}\,.\end{aligned}$$

Now, by the scaled trace inequality (3.25) and the property $\|\boldsymbol{d}^\sharp\| \le C_{\text{aux}} h_{\Omega_h}$, one has

$$|I_{21}| \le C_{21} \|e_{\bar{u}}\|_{V(\Omega_h;\mathcal{T}_h)} \, h_{\Omega_h}^{1/2} \, \|\nabla\psi\|_{0,\mathcal{E}_h^c} \le C_{22} \, h_{\Omega_h}^{1/2} \, \|e_{\bar{u}}\|_{V(\Omega_h;\mathcal{T}_h)} \, \|\psi\|_{2,\Omega_h} \, ;$$

the last inequality follows from the generalized trace inequality $\|\nabla\psi\|_{0,\mathcal{E}_h^c} \le C\|\psi\|_{2,\Omega_h}$ with $C > 0$ independent of the meshsize, which can be proven by observing that the edges/faces of $\mathcal{E}_h^c$ can be collected into a finite number (independent of the meshsize) of subsets, each one sitting on the boundary ∂A of a Lipschitz subdomain A satisfying $\tilde{\Omega}_h \subseteq A \subseteq \Omega_h$. On the other hand, it holds

$$|I_{22}| \le C_{23} \|e_{\bar{u}}\|_{V(\Omega_h;\mathcal{T}_h)} \, \|h^{-1/2} \, \{ R_h^\sharp \psi \}_\gamma \|_{0,\mathcal{E}_h^c} \le C_{24} \, h_{\Omega_h} \, \|e_{\bar{u}}\|_{V(\Omega_h;\mathcal{T}_h)} \, |\psi|_{2,\Omega_{\text{aux}}} \, ,$$

where the last inequality can be proven as in Proposition 3 in [36]. Summarizing, we have proven that

$$|\langle \{\nabla e_{\bar{u}}\}_\gamma \cdot [\![\alpha]\!] \, , \psi \rangle_{\mathcal{E}_h^c}| \le C_2 \, h_{\Omega_h}^{1/2} \, \|e_{\bar{u}}\|_{V(\Omega_h;\mathcal{T}_h)} \| \, \alpha \, e_{\bar{u}} \, \|_{0,\Omega_h} \, . \tag{3.39}$$

Let us now focus on the third addend on the right-hand side of (3.37). Using the Taylor expansions $S_h\bar{u} = \bar{u} + \nabla\bar{u} \cdot \boldsymbol{d} + R_h\bar{u}$ and $S_h u_h = u_h + \nabla u_h \cdot \boldsymbol{d}$, we get $S_h e_{\bar{u}} - e_{\bar{u}} = \nabla e_{\bar{u}} \cdot \boldsymbol{d} + R_h\bar{u}$, whence

$$\langle \{\nabla\psi\}_\gamma \cdot [\![\alpha]\!] \, , \{ S_h e_{\bar{u}} - e_{\bar{u}} \}_\gamma \rangle_{\mathcal{E}_h^c} = \langle \{\nabla\psi\}_\gamma \cdot [\![\alpha]\!] \, , \{ \nabla e_{\bar{u}} \cdot \boldsymbol{d} \}_\gamma \rangle_{\mathcal{E}_h^c} + \langle \{\nabla\psi\}_\gamma \cdot [\![\alpha]\!] \, , \{ R_h\bar{u} \}_\gamma \rangle_{\mathcal{E}_h^c} .$$

This expression is similar to the second term in eq. (3.3), except that now the shift operates between $\mathcal{E}_h^c$ and Γ. Proceeding in a similar way as above, one gets

$$|\langle \{\nabla\psi\}_\gamma \cdot [\![\alpha]\!] \, , \{ S_h e_{\bar{u}} - e_{\bar{u}} \}_\gamma \rangle_{\mathcal{E}_h^c}| \le C_{31} \, h_{\Omega_h}^{1/2} \, \|\psi\|_{2,\Omega_h} \|e_{\bar{u}}\|_{V(\Omega_h;\mathcal{T}_h)} + C_{32} \, h_{\Omega_h}^{3/2} \, \|\psi\|_{2,\Omega_h} |\bar{u}|_{2,\Omega_h} \, ,$$

whence

$$|\langle \{\nabla\psi\}_\gamma \cdot [\![\alpha]\!] \, , \{ S_h e_{\bar{u}} - e_{\bar{u}} \}_\gamma \rangle_{\mathcal{E}_h^c}| \le C_3 \Big(h_{\Omega_h}^{1/2} \|e_{\bar{u}}\|_{V(\Omega_h;\mathcal{T}_h)} + h_{\Omega_h}^{3/2} \, |\bar{u}|_{2,\Omega_h} \Big) \| \, \alpha \, e_{\bar{u}} \, \|_{0,\Omega_h} \, . \tag{3.40}$$

The last addend on the right-hand side of (3.37) can be bounded as follows:

$$|\langle \{1/h\}_\gamma \, |[\![\alpha]\!]| \, \{ S_h\psi \}_\gamma \, , \{ S_h e_{\bar{u}} \}_\gamma \rangle_{\mathcal{E}_h^c}| \le \| \{1/h\}_\gamma^{1/2} \, |[\![\alpha]\!]|^{1/2} \, \{ S_h\psi \}_\gamma \|_{0,\mathcal{E}_h^c} \, \|e_{\bar{u}}\|_{V(\Omega_h;\mathcal{T}_h)} \, .$$

Writing $S_h\psi = \psi + \nabla\psi \cdot \boldsymbol{d} + R_h\psi$ and using the triangle inequality, one gets

$$\begin{aligned} \| \{1/h\}_\gamma^{1/2} |[\![\alpha]\!]|^{1/2} \{ S_h\psi \}_\gamma \|_{0,\mathcal{E}_h^c} &\le C_{41} \big(\|h^{-1/2}\psi\|_{0,\mathcal{E}_h^c} + \|h^{-1/2}\nabla\psi \cdot \boldsymbol{d}\|_{0,\mathcal{E}_h^c} + \|h^{-1/2} R_h\psi\|_{0,\mathcal{E}_h^c} \big) \\ &\le C_{41} \Big(\|h^{-1/2}\nabla\psi \cdot \boldsymbol{d}^\sharp\|_{0,\mathcal{E}_h^c} + \|h^{-1/2} R_h^\sharp\psi\|_{0,\mathcal{E}_h^c} + \|h^{-1/2}\nabla\psi \cdot \boldsymbol{d}\|_{0,\mathcal{E}_h^c} + \|h^{-1/2} R_h\psi\|_{0,\mathcal{E}_h^c} \Big) . \end{aligned}$$

These norms have been estimated in the previous steps of the proof, resulting in the bound

$$\| \{1/h\}_\gamma^{1/2} \, |[\![\alpha]\!]|^{1/2} \, \{ S_h\psi \}_\gamma \|_{0,\mathcal{E}_h^c} \le C_4 \, h_{\Omega_h}^{1/2} \, \| \, e_{\bar{u}} \, \|_{V(\Omega_h;\mathcal{T}_h)} \| \, \alpha \, e_{\bar{u}} \, \|_{0,\Omega_h} \, . \tag{3.41}$$

In conclusion, using estimates (3.38), (3.39), (3.40), and (3.41) to bound the right-hand side of (3.37), and recalling the energy estimate (3.31), we arrive at the claimed error bound (3.33). □

Remark 3. By definition of α, (3.33) implies

$$\| \, u - u_h \, \|_{0,\tilde{\Omega}_h} \le C \, h_{\Omega_h}^{3/2} \|u\|_{2,\Omega} \, . \tag{3.42}$$

Remark 4. The bound obtained in Theorem 3 is suboptimal, since for a body-fitted Nitsche discretization one would obtain quadratic convergence in the L^2-norm of the error, and in computations we always observe optimal, second-order convergence rates (see Section 5). Filling this gap between theoretical prediction and numerical behaviour, which is common to SBM and other non-fitted methods, remains an open problem.

4. The SBM for the Stokes flow equations

The strong form of the Stokes flow equations with non-homogeneous Dirichlet and Neumann boundary conditions read

$$-\nabla \cdot (2\mu \, \boldsymbol{\varepsilon}(\boldsymbol{u}) - p\boldsymbol{I}) = \boldsymbol{f} \qquad \text{in } \Omega \, , \tag{4.1a}$$

$$\nabla \cdot \boldsymbol{u} = 0 \qquad \text{in } \Omega \, , \tag{4.1b}$$

$$\boldsymbol{u} = \boldsymbol{u}_D \qquad \text{on } \Gamma_D \, , \tag{4.1c}$$

$$(2\mu \, \boldsymbol{\varepsilon}(\boldsymbol{u}) - p\boldsymbol{I}) \cdot \boldsymbol{n} = \boldsymbol{t}_N \qquad \text{on } \Gamma_N \, , \tag{4.1d}$$

where $\boldsymbol{\varepsilon}(\boldsymbol{u}) := 1/2(\nabla\boldsymbol{u} + \nabla\boldsymbol{u}^T)$ is the velocity strain tensor, $\mu > 0$ is the dynamic viscosity, p is the pressure, $\boldsymbol{f}$ is a body force, $\boldsymbol{u}_D$ is the value of the velocity on the Dirichlet boundary $\Gamma_D \neq \emptyset$ and $\boldsymbol{t}_N$ is the vector-valued normal stress on the Neumann boundary Γ_N (where $\partial\Omega =: \Gamma = \overline{\Gamma_D \cup \Gamma_N}$ with $\Gamma_D \cap \Gamma_N = \emptyset$). The Stokes flow represents a prototype for the application of the SBM to systems of differential equations in mixed form.

4.1. Weak discrete formulation

We build our discretization on the same unfitted triangulation $\mathcal{T}_h$, surrogate domain Ω_h, mapping $\boldsymbol{M}_h$ and extension operator $\mathbb{E}_h$ as introduced in Sect. 2. Furthermore, we make the following

Assumption 3. The Neumann boundary is body-fitted, i.e., $\tilde{\Gamma}_{h,N} = \Gamma_N$ and $\hat{\Gamma}_{h,N} = \mathcal{E}_h^{c;\circ} = \emptyset$.

This assumption is actually most frequently verified in applications involving the Stokes and Navier-Stokes equations. Indeed, Neumann conditions are simply inflow and outflow conditions, and are typically applied on a portion of the boundary that can be easily meshed using a body-fitted grid.

We propose a discretization based on the stabilized formulation of the Stokes problem by Hughes et al. [45], which uses equal-order approximations for velocities and pressures. To be precise, we consider the subspaces

$$\boldsymbol{V}_h(\Omega_h) = \left\{ \boldsymbol{v}_h \in C^0(\Omega_h)^{n_d} \mid \boldsymbol{v}_{h|T} \in \mathbb{P}_1(T)^{n_d}\,,\ \forall T \in \mathcal{T}_h \right\} \subset H^1(\Omega_h)^{n_d}\,, \tag{4.2a}$$

$$Q_h(\Omega_h) = \left\{ q_h \in C^0(\Omega_h) \mid q_{h|T} \in \mathbb{P}_1(T)\,,\ \forall T \in \mathcal{T}_h \right\} \subset L^2(\Omega_h)\,, \tag{4.2b}$$

and we conveniently introduce the product space $\boldsymbol{W}_h(\Omega_h) = \boldsymbol{V}_h(\Omega_h) \times Q_h(\Omega_h)$.

To derive the weak discrete formulation of the problem, we multiply the governing Eqs. (4.1a)-(4.1b) by $[\alpha\,\boldsymbol{w}_h\,,\ \alpha\,q_h]$ over a generic element T, and integrate the term $(-\nabla\cdot(2\mu\,\boldsymbol{\varepsilon}(\boldsymbol{u}) - p\boldsymbol{I}\,,\ \alpha\,\boldsymbol{w}_h))_T$ by parts, getting

$$\begin{aligned}(2\mu\,\boldsymbol{\varepsilon}(\boldsymbol{u})\,,\ \alpha\,\boldsymbol{\varepsilon}(\boldsymbol{w}_h))_T - (p\,,\ \alpha\,\nabla\cdot\boldsymbol{w}_h)_T - \langle 2\mu\,\boldsymbol{\varepsilon}(\boldsymbol{u}) - p\boldsymbol{I}\,,\ \alpha\,\boldsymbol{w}_h\otimes\tilde{\boldsymbol{n}}\rangle_{\partial T} \\ +(\nabla\cdot\boldsymbol{u}\,,\ \alpha\,q_h)_T = (\boldsymbol{f}\,,\ \alpha\,\boldsymbol{w}_h)_T\,.\end{aligned}$$

We now sum over all elements and use eq. (3.9) component-wise, recalling the definitions (3.6) and (3.8) of averages and jumps. This yields

$$\begin{aligned}&(2\mu\,\boldsymbol{\varepsilon}(\boldsymbol{u}),\alpha\,\boldsymbol{\varepsilon}(\boldsymbol{w}_h))_{\Omega_h} - (p,\alpha\,\nabla\cdot\boldsymbol{w}_h)_{\Omega_h} + (\nabla\cdot\boldsymbol{u},\alpha\,q_h)_{\Omega_h} - \langle\{\alpha\,\boldsymbol{w}_h\}_{1-\gamma},[\![2\mu\,\boldsymbol{\varepsilon}(\boldsymbol{u}) - p\boldsymbol{I}]\!]\rangle_{\mathcal{E}_h^\circ} \\ &- \langle[\![\alpha\,\boldsymbol{w}_h]\!]\,,\ \{2\mu\,\boldsymbol{\varepsilon}(\boldsymbol{u}) - p\boldsymbol{I}\}_\gamma\rangle_{\mathcal{E}_h^\circ} + \langle\alpha\,\boldsymbol{w}_h\otimes\tilde{\boldsymbol{n}}\,,\ 2\mu\,\boldsymbol{\varepsilon}(\boldsymbol{u}) - p\boldsymbol{I}\rangle_{\hat{\Gamma}_h\cup\Gamma_N} = (\boldsymbol{f}\,,\ \alpha\,\boldsymbol{w}_h)_{\Omega_h}\,.\end{aligned} \tag{4.3}$$

Enforcing continuity of the normal stresses across $\mathcal{E}_h^\circ$, i.e., $[\![2\mu\,\boldsymbol{\varepsilon}(\boldsymbol{u}) - p\boldsymbol{I}]\!] = \boldsymbol{0}$, the traction condition $\boldsymbol{t}_N$ on Γ_N, and noting that $\boldsymbol{w}_h \in C^0(\Omega_h)$ and $[\![\alpha]\!] = 0$ on $\tilde{\mathcal{E}}_h^\circ$, gives

$$\begin{aligned}&(2\mu\,\boldsymbol{\varepsilon}(\boldsymbol{u})\,,\ \alpha\,\boldsymbol{\varepsilon}(\boldsymbol{w}_h))_{\Omega_h} - (p\,,\ \alpha\,\nabla\cdot\boldsymbol{w}_h)_{\Omega_h} + (\nabla\cdot\boldsymbol{u}\,,\ \alpha\,q_h)_{\Omega_h} - \langle\boldsymbol{w}_h\otimes[\![\alpha]\!]\,,\ \{2\mu\,\boldsymbol{\varepsilon}(\boldsymbol{u}) - p\boldsymbol{I}\}_\gamma\rangle_{\mathcal{E}_h^c} \\ &\qquad = (\boldsymbol{f}\,,\ \alpha\,\boldsymbol{w}_h)_{\Omega_h} + \langle\boldsymbol{t}_N\,,\ \boldsymbol{w}_h\rangle_{\Gamma_N}\,.\end{aligned} \tag{4.4}$$

Utilizing an unsymmetric form of the velocity strain and pressure gradient to weakly enforce (4.1c) in the shifted form $\boldsymbol{S}_h\boldsymbol{u} = \mathbb{E}_h\boldsymbol{u}_D$ on $\mathcal{E}_h^c$ through a Nitsche's method, and adding a consistent pressure stabilization term required by the equal-order velocity/pressure pairs, yields

$$\begin{aligned}&(2\mu\,\boldsymbol{\varepsilon}(\boldsymbol{u})\,,\ \alpha\,\boldsymbol{\varepsilon}(\boldsymbol{w}_h))_{\Omega_h} - (p\,,\ \alpha\,\nabla\cdot\boldsymbol{w}_h)_{\Omega_h} + (\nabla\cdot\boldsymbol{u}\,,\ \alpha\,q_h)_{\Omega_h} - \langle\boldsymbol{w}_h\otimes[\![\alpha]\!]\,,\ \{2\mu\,\boldsymbol{\varepsilon}(\boldsymbol{u}) - p\boldsymbol{I}\}_\gamma\rangle_{\mathcal{E}_h^c} \\ &\quad - \langle\{\boldsymbol{S}_h\boldsymbol{u}\}_\gamma\otimes[\![\alpha]\!]\,,\ \{2\mu\,\boldsymbol{\varepsilon}(\boldsymbol{w}_h) + q_h\boldsymbol{I}\}_\gamma\rangle_{\mathcal{E}_h^c} + \kappa_1\langle\{2\,\mu/h\}_\gamma|[\![\alpha]\!]|\{\boldsymbol{S}_h\boldsymbol{u}\}_\gamma\,,\ \{\boldsymbol{S}_h\boldsymbol{w}_h\}_\gamma\rangle_{\mathcal{E}_h^c} \\ &\quad + \delta\sum_{T\in\mathcal{T}_h}\left(h_\tau^2\,(2\mu)^{-1}\,(-\nabla\cdot(2\mu\,\boldsymbol{\varepsilon}(\boldsymbol{u})) + \nabla p)\,,\ \alpha\,\nabla q_h\right)_T \\ &= (\boldsymbol{f}\,,\ \alpha\,\boldsymbol{w}_h)_{\Omega_h} + \langle\boldsymbol{t}_N\,,\ \boldsymbol{w}_h\rangle_{\Gamma_N} + \langle\mathbb{E}_h\boldsymbol{u}_D\otimes[\![\alpha]\!]\,,\ \{2\mu\,\boldsymbol{\varepsilon}(\boldsymbol{w}_h) + q_h\boldsymbol{I}\}_\gamma\rangle_{\mathcal{E}_h^c} \\ &\quad + \kappa_1\langle\{2\,\mu/h\}_\gamma|[\![\alpha]\!]|\,\mathbb{E}_h\boldsymbol{u}_D\,,\ \{\boldsymbol{S}_h\boldsymbol{w}_h\}_\gamma\rangle_{\mathcal{E}_h^c} + \delta\sum_{T\in\mathcal{T}_h}\left(h_\tau^2\,(2\mu)^{-1}\boldsymbol{f}\,,\ \alpha\,\nabla q_h\right)_T\,,\end{aligned} \tag{4.5}$$

where $\delta > 0$. Finally, we add to the left-hand side of (4.5) ghost penalties of the form

$$\kappa_2\,\langle 2\,\mu\,h_{aa}\,[\![\boldsymbol{\varepsilon}(\boldsymbol{u})]\!]\,,\ [\![\boldsymbol{\varepsilon}(\boldsymbol{w}_h)]\!]\rangle_{\mathcal{E}_h^a} \qquad \text{and} \qquad \kappa_3\,\langle(2\,\mu)^{-1}h_{aa}^3\,[\![\nabla p]\!]\,,\ [\![\nabla q_h)]\!]\rangle_{\mathcal{E}_h^a}\,. \tag{4.6}$$

In conclusion, our weak discrete formulation of the Stokes problem reads as follows:
Find $[\boldsymbol{u}_h\,,\ p_h] \in \boldsymbol{W}_h(\Omega_h)$ *such that*

$$\mathcal{B}_h([\boldsymbol{u}_h\,,\ p_h];[\boldsymbol{w}_h\,,\ q_h]) = \mathcal{L}_h([\boldsymbol{w}_h\,,\ q_h])\,, \qquad \forall[\boldsymbol{w}_h\,,\ q_h] \in \boldsymbol{W}_h(\Omega_h)\,, \tag{4.7a}$$

where

$$\mathcal{B}_h([\boldsymbol{u}_h\,,\ p_h];[\boldsymbol{w}_h\,,\ q_h]) := a(\boldsymbol{u}_h\,,\ \boldsymbol{w}_h) + b(p_h\,,\ \boldsymbol{w}_h) + \bar{b}(\boldsymbol{u}_h\,,\ q_h) + c(p_h\,,\ q_h)\,, \tag{4.7b}$$

$$\mathcal{L}_h([\boldsymbol{w}_h\,,\ q_h]) := l_{\boldsymbol{w}}(\boldsymbol{w}_h) + l_q(q_h)\,, \tag{4.7c}$$

with

$$\begin{aligned}a(\boldsymbol{u}_h,\boldsymbol{w}_h) := {}& (2\mu\,\boldsymbol{\varepsilon}(\boldsymbol{u}_h),\alpha\,\boldsymbol{\varepsilon}(\boldsymbol{w}_h))_{\Omega_h} - \langle\boldsymbol{w}_h\otimes[\![\alpha]\!],\{2\mu\,\boldsymbol{\varepsilon}(\boldsymbol{u}_h)\}_\gamma\rangle_{\mathcal{E}_h^c} \\ &- \langle\{\boldsymbol{S}_h\boldsymbol{u}_h\}_\gamma\otimes[\![\alpha]\!],\{2\mu\,\boldsymbol{\varepsilon}(\boldsymbol{w}_h)\}_\gamma\rangle_{\mathcal{E}_h^c} + \kappa_1\langle\{2\,\mu/h\}_\gamma|[\![\alpha]\!]|\{\boldsymbol{S}_h\boldsymbol{u}_h\}_\gamma,\{\boldsymbol{S}_h\boldsymbol{w}_h\}_\gamma\rangle_{\mathcal{E}_h^c}\end{aligned} \tag{4.7d}$$

$$+ \kappa_2 \langle 2\,\mu\, h_{aa}\, [\![\boldsymbol{\varepsilon}(\boldsymbol{u}_h)]\!], [\![\boldsymbol{\varepsilon}(\boldsymbol{w}_h)]\!]\rangle_{\mathcal{E}_h^a}\,, \tag{4.7e}$$

$$b(p_h, \boldsymbol{w}_h) := -(p_h, \alpha\,\nabla\cdot\boldsymbol{w}_h)_{\Omega_h} + \langle \boldsymbol{w}_h\cdot[\![\alpha]\!], p_h\rangle_{\mathcal{E}_h^c}\,, \tag{4.7f}$$

$$\bar{b}(\boldsymbol{u}_h, q_h) := (q_h, \alpha\,\nabla\cdot\boldsymbol{u}_h)_{\Omega_h} - \langle \{\boldsymbol{S}_h\boldsymbol{u}_h\}_\gamma\cdot[\![\alpha]\!], q_h\rangle_{\mathcal{E}_h^c} - \delta\sum_{T\in\mathcal{T}_h}\left(h^2\,(2\mu)^{-1}\,\nabla\cdot(2\mu\,\boldsymbol{\varepsilon}(\boldsymbol{u}_h)), \alpha\,\nabla q_h\right)_T, \tag{4.7g}$$

$$c(p_h\,,\,q_h) := \delta\,(h^2\,(2\mu)^{-1}\,\nabla p_h\,,\,\alpha\,\nabla q_h)_{\Omega_h} + \kappa_3\,\langle (2\,\mu)^{-1} h_{aa}^3\,[\![\nabla p_h]\!]\,,\,[\![\nabla q_h]\!]\rangle_{\mathcal{E}_h^a}\,, \tag{4.7h}$$

$$\begin{aligned} l_{\boldsymbol{w}}(\boldsymbol{w}_h) := {} & (\boldsymbol{f}\,,\,\alpha\,\boldsymbol{w}_h)_{\Omega_h} + \langle \boldsymbol{t}_N\,,\,\boldsymbol{w}_h\rangle_{\Gamma_N} - \langle \mathbb{E}_h\boldsymbol{u}_D\otimes[\![\alpha]\!]\,,\,2\mu\{\boldsymbol{\varepsilon}(\boldsymbol{w}_h)\}_\gamma\rangle_{\mathcal{E}_h^c} \\ & + \kappa_1\langle\{2\,\mu/h\}_\gamma\,|[\![\alpha]\!]|\,\mathbb{E}_h\boldsymbol{u}_D\,,\,\{\boldsymbol{S}_h\boldsymbol{w}_h\}_\gamma\rangle_{\mathcal{E}_h^c}\,, \end{aligned} \tag{4.7i}$$

$$l_q(q_h) := -\langle \mathbb{E}_h\boldsymbol{u}_D\cdot[\![\alpha]\!]\,,\,q_h\rangle_{\mathcal{E}_h^c} + \delta\sum_{T\in\mathcal{T}_h}\left(h_\tau^2\,(2\mu)^{-1}\boldsymbol{f}\,,\,\alpha\,\nabla q_h\right)_T\,. \tag{4.7j}$$

4.2. Well-posedness and stability

The first step in our analysis is to formulate an assumption, similar to Assumption 1, which guarantees that the bilinear form $\mathcal{B}(\cdot,\cdot)$ satisfies a uniform inf-sup condition.

Assumption 4. The distance function $\boldsymbol{d}$ satisfies the condition

$$\|\boldsymbol{d}/h^*\|_{L^\infty(\mathcal{E}_h^c)} \le \chi\,\zeta\,, \tag{4.8}$$

where, for some fixed $\chi\in(0,1)$, we set $\zeta := \frac{1}{2}(C_I\,C_K)^{-1/2}\min\left(1,(1-\chi^2)^{1/2}C_I^{-1/2}\right)$, with C_I satisfying (3.15) and C_K satisfying Korn's inequality

$$\|\boldsymbol{v}\|_{1,\Omega_h}^2 \le C_K\left(\|\,\boldsymbol{v}\,\|_{0,\hat{\Gamma}_h}^2 + \|\,\boldsymbol{\varepsilon}(\boldsymbol{v})\,\|_{0,\Omega_h}^2\right), \qquad \forall\boldsymbol{v}\in H^1(\Omega_h)^{n_d}\,. \tag{4.9}$$

Comments similar to those reported in Remark 2 apply to this assumption as well.

Lemma 4. *If h_{Ω_h} is small enough, then for any $\boldsymbol{u}_h\in\boldsymbol{V}_h(\Omega_h)$ one has*

$$2\|\boldsymbol{u}_h\|_{0,\Omega_h}^2 + \left(1-\chi^2\right)\|\nabla\boldsymbol{u}_h\|_{0,\Omega_h}^2 \le 4\,C_K\|\{1/h\}_\gamma^{1/2}|[\![\alpha]\!]|^{1/2}\{\boldsymbol{S}_h\boldsymbol{u}_h\}_\gamma\|_{\mathcal{E}_h^c}^2 + 2C_K\|\boldsymbol{\varepsilon}(\boldsymbol{u}_h)\|_{0,\Omega_h}^2\,. \tag{4.10}$$

Proof.

Let us first prove the existence of two constants $C_1, C_2 > 0$ independent of $\boldsymbol{u}_h$ and the meshsize such that

$$\|\boldsymbol{u}_h\|_{0,\hat{\Gamma}_h}^2 \le C_1\|\,|[\![\alpha]\!]|\,\boldsymbol{u}_h\|_{0,\mathcal{E}_h^c}^2 + C_2\,h_{\Omega_h}\,\|\nabla\boldsymbol{u}_h\|_{0,\Omega_h}^2 \qquad \forall\boldsymbol{u}_h\in\boldsymbol{V}_h(\Omega_h)\,. \tag{4.11}$$

To this end, consider an edge/face $E\subset\hat{\Gamma}_h$ and let $T_E\in\mathcal{T}_h$ be such that $E\subset\partial T_E$. Assume at first that there exists $T_G\in\mathcal{T}_h$ with edges/faces F and G, such that $F = T_E\cap T_G$ and $G\subset\tilde{\Gamma}_h$. Then, $|[\![\alpha]\!]_G| = 1-\alpha_G$, $|[\![\alpha]\!]_F| = |\alpha_E-\alpha_G|$, and $|[\![\alpha]\!]_E| = \alpha_E$. Let $0<\eta\le 1/4$ be fixed. If $\alpha_G\le 1-\eta$, then $1-\alpha_G\ge\eta$. On the contrary, if $\alpha_G > 1-\eta$, then either $\alpha_E\ge\eta$, or $\alpha_E<\eta$, in which case $|\alpha_E-\alpha_G| = \alpha_G-\alpha_E\ge 1-2\eta>\eta$. In all cases, there exists $H\in\{E,F,G\}$ such that $|[\![\alpha]\!]_H|\ge\eta$. Furthermore, we can prove the existence of constants $c_0, c_1, c_2 > 0$ independent of $\boldsymbol{u}_h$ and the meshsize such that

$$\|\boldsymbol{u}_h\|_{0,E}^2 \le c_0\|\boldsymbol{u}_h\|_{0,H}^2 + c_2\,h\,\|\nabla\boldsymbol{u}_h\|_{0,T_E\cup T_G}^2 \le c_1\|\,|[\![\alpha]\!]_H|\,\boldsymbol{u}_h\|_{0,H}^2 + c_2\,h\,\|\nabla\boldsymbol{u}_h\|_{0,T_E\cup T_G}^2\,.$$

Indeed, the inequality is trivial if $H=E$. If $H=F$, observing that $\nabla\boldsymbol{u}_h$ is constant on T_E, we can write

$$\|\boldsymbol{u}_h(\boldsymbol{x}_E)-\boldsymbol{u}_h(\boldsymbol{x}_F)\| \le \|\nabla\boldsymbol{u}_h|_{T_E}\|\,\|\boldsymbol{x}_E-\boldsymbol{x}_F\| \le h_E\|\nabla\boldsymbol{u}_h|_{T_E}\|$$

for any $\boldsymbol{x}_E\in E$ and $\boldsymbol{x}_F\in F$. Adopting a compatible parametrization on both E and F gives

$$\int_E\|\boldsymbol{u}_h\|^2 \le 2\frac{|E|}{|F|}\int_F\|\boldsymbol{u}_h\|^2 + 2h_E^2|E|\,\|\nabla\boldsymbol{u}_h|_{T_E}\|^2\,,$$

which implies the desired inequality, thanks to the non-degeneracy of the mesh. If $H=G$, it is sufficient to concatenate this inequality with the similar one relating F to G.

Next, observe that if T_E does not share an edge/face with an element T_G having an edge/face on $\tilde{\Gamma}_h$, there is certainly such an element within distance $O(h)$ from T_E. In other words, for any $E\subset\hat{\Gamma}_h$, there exists $H_E\subset\mathcal{E}_h^c$ with $\mathrm{dist}\,(E,H_E) = O(h)$, such that

$$\|\boldsymbol{u}_h\|_{0,E}^2 \le c_1\|\,|[\![\alpha]\!]_H|\,\boldsymbol{u}_h\|_{0,H_E}^2 + c_2\,h\,\|\nabla\boldsymbol{u}_h\|_{0,\mathcal{N}(T_E)}^2\,,$$

where $\mathcal{N}(T_E)$ is a patch of elements around T_E. Summing-up over all edges/faces of $\hat{\Gamma}_h$, we obtain (4.11).

We substitute this expression in Korn's inequality (4.9) with $\boldsymbol{v}=\boldsymbol{u}_h$, and assume h_{Ω_h} to be sufficiently small so that $C_KC_2h_{\Omega_h}\le 1/2$ and $C_1\le h_{\Omega_h}^{-1}$, the latter inequality implying $C_1\le\{1/h\}_\gamma$ for any value of h in the mesh. In this way, we get

$$2\|\boldsymbol{u}_h\|_{\Omega_h}^2 + \|\,\nabla\boldsymbol{u}_h\,\|_{0,\Omega_h}^2 \le 2\,C_K\left(\|\,\{1/h\}_\gamma^{1/2}\,|[\![\alpha]\!]|^{1/2}\,\boldsymbol{u}_h\,\|_{0,\mathcal{E}_h^c}^2 + \|\,\boldsymbol{\varepsilon}(\boldsymbol{u}_h)\,\|_{0,\Omega_h}^2\right). \tag{4.12}$$

Next, using the triangle inequality, we have

$$\|\{1/h\}_\gamma^{1/2}|[\![\alpha]\!]|^{1/2}\boldsymbol{u}_h\|_{\mathcal{E}_h^c} \le \|\{1/h\}_\gamma^{1/2}|[\![\alpha]\!]|^{1/2}\{\boldsymbol{S}_h\boldsymbol{u}_h\}_\gamma\|_{\mathcal{E}_h^c} + \|\{1/h\}_\gamma^{1/2}|[\![\alpha]\!]|^{1/2}\{\nabla\boldsymbol{u}_h\boldsymbol{d}\}_\gamma\|_{\mathcal{E}_h^c}\,. \tag{4.13}$$

Noticing that $\{1/h\}_\gamma \le 1/h^*$ and using Assumption 4, the last term can be bounded as

$$\begin{aligned}
\|\{1/h\}_\gamma^{1/2}|[\![\alpha]\!]|^{1/2}\{\nabla\boldsymbol{u}_h\boldsymbol{d}\}_\gamma\|_{0,\mathcal{E}_h^c} \le\ & \|\sqrt{\frac{\alpha^+}{\alpha^+ + \alpha^-}}\sqrt{\frac{|\alpha^+ - \alpha^-|}{\alpha^+ + \alpha^-}}\sqrt{\frac{1}{h^*}}\sqrt{\alpha^+ h^+}\,\nabla\boldsymbol{u}_h^+\|_{\mathcal{E}_h^c}\times \\
&\times \|\boldsymbol{d}/\sqrt{h^+}\|_{L^\infty(\mathcal{E}_h^c)} + \|\sqrt{\frac{\alpha^-}{\alpha^+ + \alpha^-}}\sqrt{\frac{|\alpha^+ - \alpha^-|}{\alpha^+ + \alpha^-}}\sqrt{\frac{1}{h^*}}\sqrt{\alpha^- h^-}\,\nabla\boldsymbol{u}_h^-\|_{\mathcal{E}_h^c}\|\boldsymbol{d}/\sqrt{h^-}\|_{L^\infty(\mathcal{E}_h^c)} \\
\le\ & \Big(\|\sqrt{\alpha^+ h^+}\,\nabla\boldsymbol{u}_h^+\|_{\mathcal{E}_h^c} + \|\sqrt{\alpha^- h^-}\,\nabla\boldsymbol{u}_h^-\|_{\mathcal{E}_h^c}\Big)\|\boldsymbol{d}/h^*\|_{L^\infty(\mathcal{E}_h^c)} \\
\le\ & \chi\,\zeta\,C_I^{1/2}\,\|\alpha^{1/2}\,\nabla\boldsymbol{u}_h\|_{0,\Omega_h}\,.
\end{aligned} \tag{4.14}$$

Substituting into (4.13) yields

$$\|\{1/h\}_\gamma^{1/2}|[\![\alpha]\!]|^{1/2}\boldsymbol{u}_h\|_{\mathcal{E}_h^c} \le \|\{1/h\}_\gamma^{1/2}|[\![\alpha]\!]|^{1/2}\{\boldsymbol{S}_h\boldsymbol{u}_h\}_\gamma\|_{\mathcal{E}_h^c} + \chi\,\zeta\,C_I^{1/2}\|\alpha^{1/2}\,\nabla\boldsymbol{u}_h\|_{0,\Omega_h}\,,$$

whence

$$\|\{1/h\}_\gamma^{1/2}|[\![\alpha]\!]|^{1/2}\boldsymbol{u}_h\|_{\mathcal{E}_h^c}^2 \le 2\Big(\|\{1/h\}_\gamma^{1/2}|[\![\alpha]\!]|^{1/2}\{\boldsymbol{S}_h\boldsymbol{u}_h\}_\gamma\|_{\mathcal{E}_h^c}^2 + (\chi\,\zeta)^2\,C_I\,\|\alpha^{1/2}\,\nabla\boldsymbol{u}_h\|_{0,\Omega_h}^2\Big)\,.$$

Substituting this expression into (4.12) yields

$$\|\boldsymbol{u}_h\|_{\Omega_h}^2 + \big(1 - 4(\chi\,\zeta)^2 C_K\,C_I\big)\|\nabla\boldsymbol{u}_h\|_{\Omega_h}^2 \le 4C_K\|\{1/h\}_\gamma^{1/2}|[\![\alpha]\!]|^{1/2}\{\boldsymbol{S}_h\boldsymbol{u}_h\}_\gamma\|_{\mathcal{E}_h^c}^2 + 2C_K\|\boldsymbol{\varepsilon}(\boldsymbol{u}_h)\|_{\Omega_h}^2$$

and we conclude by observing that $\zeta \le \frac{1}{2}\,(C_K\,C_I)^{-1/2}$. □

By adapting the proof of Lemma 1 to the present situation, we obtain the following technical result.

Lemma 5 (Role of ghost penalties in Stokes). *There exist positive constants C_e, C_z, γ_{aa} and γ_z independent of the mesh size, such that $\forall\boldsymbol{u}_h \in \boldsymbol{V}_h(\Omega_h)$ and $\forall p_h \in Q_h(\Omega_h)$*

$$C_e\,\|\,(2\mu)^{1/2}\,\boldsymbol{\varepsilon}(\boldsymbol{u}_h)\,\|_{0,\Omega_h}^2 \le \|\,(2\mu\,\alpha)^{1/2}\,\boldsymbol{\varepsilon}(\boldsymbol{u}_h)\,\|_{0,\Omega_h}^2 + \gamma_{aa}\,\|\,(2\mu\,h_{aa})^{1/2}\,[\![\boldsymbol{\varepsilon}(\boldsymbol{u}_h)]\!]\|_{\mathcal{E}_h^a}^2\,, \tag{4.15a}$$

$$C_z\,\|\,(2\mu)^{-1/2}p_h\,\|_{0,\Omega_h}^2 \le \|\,(2\mu)^{-1/2}p_h\,\|_{0,\tilde{\Omega}_h}^2 + \gamma_z\,\|\,(2\mu)^{-1/2}h_{aa}^{3/2}[\![\nabla p_h]\!]\|_{\mathcal{E}_h^a}^2\,. \tag{4.15b}$$

The main result of this section comes next.

Theorem 4 (LBB inf-sup condition in Stokes). *Let Assumption 4 hold with χ small enough. If the penalization parameters κ_1, κ_2, κ_3 and the pressure stabilization parameter δ are large enough, then there exists a constant $\beta_{LBB} > 0$, independent of the mesh size, such that for any pair $[\boldsymbol{u}_h, p_h] \in \boldsymbol{W}_h(\Omega_h)$ one can find a pair $[\boldsymbol{w}_h, q_h] \in \boldsymbol{W}_h(\Omega_h)$ satisfying*

$$\mathcal{B}_h([\boldsymbol{u}_h, p_h]; [\boldsymbol{w}_h, q_h]) \ge \beta_{LBB}\|[\boldsymbol{u}_h, p_h]\|_{\mathcal{B}}\|[\boldsymbol{w}_h, q_h]\|_{\mathcal{B}}\,, \tag{4.16a}$$

where

$$\|[\boldsymbol{u}_h, p_h]\|_{\mathcal{B}}^2 := \|\boldsymbol{u}_h\|_a^2 + \|\,(2\mu)^{-1/2}p_h\|_{0,\Omega_h}^2 + \|\,(\alpha/2\mu)^{1/2}\,h\,\nabla p_h\|_{0,\Omega_h}^2 + \|\,(2\mu)^{-1/2}h_{aa}^{3/2}[\![\nabla p_h]\!]\|_{\mathcal{E}_h^a}^2 \tag{4.16b}$$

and

$$\|\boldsymbol{u}\|_a^2 := \|(2\,\mu)^{1/2}\boldsymbol{u}_h\|_{0,\Omega_h}^2 + \|(2\,\mu)^{1/2}\nabla\boldsymbol{u}_h\|_{0,\Omega_h}^2 + \|\{2\,\mu/h\}_\gamma^{1/2}|[\![\alpha]\!]|^{1/2}\{\boldsymbol{S}_h\boldsymbol{u}_h\}_\gamma\|_{\mathcal{E}_h^c}^2\,. \tag{4.16c}$$

Proof. We divide the proof into four steps, and we arrive at the desired result by suitably choosing three test functions in (4.7b).

Step 1. *Choice of $[\boldsymbol{w}_h\,,\,q_h] = [\boldsymbol{u}_h\,,\,p_h]$ as a test function in (4.7b).*
One has

$$\begin{aligned}
\mathcal{B}_h([\boldsymbol{u}_h, p_h]; [\boldsymbol{u}_h, p_h]) =\ & \|\,(2\mu\,\alpha)^{1/2}\,\boldsymbol{\varepsilon}(\boldsymbol{u}_h)\,\|_{0,\Omega_h}^2 + \kappa_1\,\|\{2\,\mu/h\}_\gamma^{1/2}|[\![\alpha]\!]|^{1/2}\{\boldsymbol{S}_h\boldsymbol{u}_h\}_\gamma\|_{\mathcal{E}_h^c}^2 \\
&+ \kappa_2\,\|\,(2\mu\,h_{aa})^{1/2}\,[\![\boldsymbol{\varepsilon}(\boldsymbol{u}_h)]\!]\|_{\mathcal{E}_h^a}^2 + \delta\,\|(\alpha/(2\,\mu))^{1/2}\,h\,\nabla p_h\|_{0,\Omega_h}^2 + \kappa_3\,\|\,(2\mu)^{-1/2}h_{aa}^{3/2}\,[\![\nabla p_h]\!]\|_{\mathcal{E}_h^a}^2 \\
&- \langle\{\nabla\boldsymbol{u}_h\boldsymbol{d}\}_\gamma\cdot[\![\alpha]\!], p_h\rangle_{\mathcal{E}_h^c} - 2\,\langle\{\boldsymbol{S}_h\boldsymbol{u}_h\}_\gamma\otimes[\![\alpha]\!], \{2\mu\,\boldsymbol{\varepsilon}(\boldsymbol{u}_h)\}_\gamma\rangle_{\mathcal{E}_h^c} \\
&+ \langle\{\nabla\boldsymbol{u}_h\boldsymbol{d}\}_\gamma\otimes[\![\alpha]\!], \{2\mu\,\boldsymbol{\varepsilon}(\boldsymbol{u}_h)\}_\gamma\rangle_{\mathcal{E}_h^c}\,,
\end{aligned} \tag{4.17}$$

where the term $\langle\{\nabla\boldsymbol{u}_h\boldsymbol{d}\}_\gamma\otimes[\![\alpha]\!]\,,\,\{2\mu\,\boldsymbol{\varepsilon}(\boldsymbol{w}_h)\}_\gamma\rangle_{\mathcal{E}_h^c}$ has been added and subtracted, and we exploited the identity $\nabla\cdot\boldsymbol{\varepsilon}(\boldsymbol{u}_h) = 0$ on each $T \in \mathcal{T}_h$ since $\boldsymbol{u}_h \in \mathbb{P}_1(T)^{n_d}$.

Using Young's ϵ-inequality and recalling the trace inequality (3.15) yields

$$2|\,\langle\{\boldsymbol{S}_h\boldsymbol{u}_h\}_\gamma\otimes[\![\alpha]\!]\,,\,\{2\mu\,\boldsymbol{\varepsilon}(\boldsymbol{u}_h)\}_\gamma\rangle_{\mathcal{E}_h^c}| \le 2\Big(\|\,\{2\,\mu/h\}_\gamma^{-1/2}\,\frac{2\,\mu\,\alpha^+}{\alpha^+ + \alpha^-}|[\![\alpha]\!]|^{1/2}\boldsymbol{\varepsilon}(\boldsymbol{u}_h^+)\|_{0,\mathcal{E}_h^c}$$

$$
\begin{aligned}
&+\|\{2\mu/h\}_\gamma^{-1/2}\frac{2\mu\alpha^-}{\alpha^+ + \alpha^-}|[\![\alpha]\!]|^{1/2}\boldsymbol{\varepsilon}(\boldsymbol{u}_h^-)\|_{0,\mathcal{E}_h^c}\Big)\|\{2\mu/h\}_\gamma^{1/2}|[\![\alpha]\!]|^{1/2}\{\boldsymbol{S}_h\boldsymbol{u}_h\}_\gamma\|_{0,\mathcal{E}_h^c}\\
&\le 2\Big(\|\sqrt{\frac{|\alpha^+-\alpha^-|}{\alpha^+ + \alpha^-}}\sqrt{\frac{\alpha^+ h^-}{\alpha^+ h^- + \alpha^- h^+}}\sqrt{2\mu\alpha^+ h^+}\boldsymbol{\varepsilon}(\boldsymbol{u}_h^+)\|_{0,\mathcal{E}_h^c}\\
&+\|\sqrt{\frac{|\alpha^+-\alpha^-|}{\alpha^+ + \alpha^-}}\sqrt{\frac{\alpha^- h^+}{\alpha^+ h^- + \alpha^- h^+}}\sqrt{2\mu\alpha^- h^-}\boldsymbol{\varepsilon}(\boldsymbol{u}_h^-)\|_{0,\mathcal{E}_h^c}\Big)\|\{2\mu/h\}_\gamma^{1/2}|[\![\alpha]\!]|^{1/2}\{\boldsymbol{S}_h\boldsymbol{u}_h\}_\gamma\|_{0,\mathcal{E}_h^c}\\
&\le 2\Big(\|\sqrt{2\mu\alpha^+ h^+}\boldsymbol{\varepsilon}(\boldsymbol{u}_h^+)\|_{0,\mathcal{E}_h^c}+\|\sqrt{2\mu\alpha^- h^-}\boldsymbol{\varepsilon}(\boldsymbol{u}_h^-)\|_{0,\mathcal{E}_h^c}\Big)\|\{2\mu/h\}_\gamma^{1/2}|[\![\alpha]\!]|^{1/2}\{\boldsymbol{S}_h\boldsymbol{u}_h\}_\gamma\|_{0,\mathcal{E}_h^c}\\
&\le 2C_I^{1/2}\|\sqrt{2\mu\alpha}\,\boldsymbol{\varepsilon}(\boldsymbol{u}_h)\|_{0,\Omega_h}\|\{2\mu/h\}_\gamma^{1/2}|[\![\alpha]\!]|^{1/2}\{\boldsymbol{S}_h\boldsymbol{u}_h\}_\gamma\|_{0,\mathcal{E}_h^c}\\
&\le C_I\,\epsilon_1\|\sqrt{2\mu\alpha}\,\boldsymbol{\varepsilon}(\boldsymbol{u}_h)\|_{0,\Omega_h}^2+\frac{1}{\epsilon_1}\|\{2\mu/h\}_\gamma^{1/2}|[\![\alpha]\!]|^{1/2}\{\boldsymbol{S}_h\boldsymbol{u}_h\}_\gamma\|_{0,\mathcal{E}_h^c}^2, \qquad (4.18a)
\end{aligned}
$$

$$
\begin{aligned}
&|\langle\{\nabla\boldsymbol{u}_h\boldsymbol{d}\}_\gamma\otimes[\![\alpha]\!],\{2\mu\,\boldsymbol{\varepsilon}(\boldsymbol{u}_h)\}_\gamma\rangle_{\mathcal{E}_h^c}|\\
&\quad\le\|\sqrt{2\mu\alpha^+ h^+}\nabla\boldsymbol{u}_h^+\|_{0,\mathcal{E}_h^c}\|\sqrt{2\mu\alpha^+ h^+}\boldsymbol{\varepsilon}(\boldsymbol{u}_h^+)\|_{0,\mathcal{E}_h^c}\|\boldsymbol{d}/h^+\|_{L^\infty(\mathcal{E}_h^c)}\\
&\quad\quad+\|\sqrt{2\mu\alpha^- h^-}\nabla\boldsymbol{u}_h^-\|_{0,\mathcal{E}_h^c}\|\sqrt{2\mu\alpha^- h^-}\boldsymbol{\varepsilon}(\boldsymbol{u}_h^-)\|_{0,\mathcal{E}_h^c}\|\boldsymbol{d}/h^-\|_{L^\infty(\mathcal{E}_h^c)}\\
&\quad\quad+\|\sqrt{2\mu\alpha^+ h^+}\nabla\boldsymbol{u}_h^+\|_{0,\mathcal{E}_h^c}\|\sqrt{2\mu\alpha^- h^-}\boldsymbol{\varepsilon}(\boldsymbol{u}_h^-)\|_{0,\mathcal{E}_h^c}\|\boldsymbol{d}/\sqrt{h^+ h^-}\|_{L^\infty(\mathcal{E}_h^c)}\\
&\quad\quad+\|\sqrt{2\mu\alpha^- h^-}\nabla\boldsymbol{u}_h^-\|_{0,\mathcal{E}_h^c}\|\sqrt{2\mu\alpha^+ h^+}\boldsymbol{\varepsilon}(\boldsymbol{u}_h^+)\|_{0,\mathcal{E}_h^c}\|\boldsymbol{d}/\sqrt{h^+ h^-}\|_{L^\infty(\mathcal{E}_h^c)}\\
&\quad\le\|\boldsymbol{d}/h^*\|_{L^\infty(\mathcal{E}_h^c)}C_I\Big(\frac{1}{\epsilon_2}\|\sqrt{2\mu\alpha}\nabla\boldsymbol{u}_h\|_{0,\Omega_h}^2+\epsilon_2\|\sqrt{2\mu\alpha}\,\boldsymbol{\varepsilon}(\boldsymbol{u}_h)\|_{0,\Omega_h}^2\Big), \qquad (4.18b)
\end{aligned}
$$

$$
\begin{aligned}
&|\langle\{\nabla\boldsymbol{u}_h\boldsymbol{d}\}_\gamma\cdot[\![\alpha]\!],p_h\rangle_{\mathcal{E}_h^c}|\le\|\sqrt{2\mu\alpha^+ h^+}\nabla\boldsymbol{u}_h^+\|_{0,\mathcal{E}_h^c}\|\sqrt{\alpha^+ h^+/(2\mu)}\,p_h\|_{0,\mathcal{E}_h^c}\|\boldsymbol{d}/h^+\|_{L^\infty(\mathcal{E}_h^c)}\\
&\quad+\|\sqrt{2\mu\alpha^- h^-}\nabla\boldsymbol{u}_h^-\|_{0,\mathcal{E}_h^c}\|\sqrt{\alpha^- h^-/(2\mu)}\,p_h\|_{0,\mathcal{E}_h^c}\|\boldsymbol{d}/h^-\|_{L^\infty(\mathcal{E}_h^c)}\\
&\quad\le\|\boldsymbol{d}/h^*\|_{L^\infty(\mathcal{E}_h^c)}C_I\Big(\frac{1}{\epsilon_3}\|\sqrt{2\mu\alpha}\nabla\boldsymbol{u}_h\|_{0,\Omega_h}^2+\epsilon_3\|\sqrt{\alpha/(2\mu)}\,p_h\|_{0,\Omega_h}^2\Big). \qquad (4.18c)
\end{aligned}
$$

Substituting (4.18) into (4.17) and applying Assumption 4, we obtain

$$
\begin{aligned}
\mathcal{B}_h([\boldsymbol{u}_h,p_h];[\boldsymbol{u}_h,p_h])\ge&\ \big(1-\epsilon_1 C_I-\chi\zeta C_I\epsilon_2\big)\|(2\mu\alpha)^{1/2}\boldsymbol{\varepsilon}(\boldsymbol{u}_h)\|_{0,\Omega_h}^2\\
&+\kappa_2\|(2\mu h_{aa})^{1/2}[\![\boldsymbol{\varepsilon}(\boldsymbol{u}_h)]\!]\|_{\mathcal{E}_h^a}^2+\big(\kappa_1-\epsilon_1^{-1}\big)\|\{2\mu/h\}_\gamma^{1/2}|[\![\alpha]\!]|^{1/2}\{\boldsymbol{S}_h\boldsymbol{u}_h\}_\gamma\|_{\mathcal{E}_h^c}^2\\
&+\delta\|h(\alpha/(2\mu))^{1/2}\nabla p_h\|_{0,\Omega_h}^2+\kappa_3\|(2\mu)^{-1/2}h_{aa}^{3/2}[\![\nabla p_h]\!]\|_{\mathcal{E}_h^a}^2-\chi\zeta C_I\epsilon_3\|(\alpha/(2\mu))^{1/2}p_h\|_{0,\Omega_h}^2\\
&-\chi\zeta C_I\big(\epsilon_2^{-1}+\epsilon_3^{-1}\big)\|(2\mu\alpha)^{1/2}\nabla\boldsymbol{u}_h\|_{0,\tilde\Omega_h}^2. \qquad (4.19)
\end{aligned}
$$

To proceed, let us set $\lambda:=(1-\chi^2)^{-1/2}C_I\,C_K^{1/2}$ and note that $\zeta=\min\Big(1,C_I^{1/2}(1-\chi^2)^{-1/2}\Big)/2\lambda$. Choosing $\epsilon_1=2^{-1}C_I^{-1}$ and $\epsilon_2=\epsilon_3=\lambda/C_I$, we have

$$
\begin{aligned}
\mathcal{B}_h([\boldsymbol{u}_h,p_h];[\boldsymbol{u}_h,p_h])\ge&\ 2^{-1}(1-\chi)\|(2\mu\alpha)^{1/2}\boldsymbol{\varepsilon}(\boldsymbol{u}_h)\|_{0,\Omega_h}^2\\
&+\big(\kappa_1-2C_I\big)\|\{2\mu/h\}_\gamma^{1/2}|[\![\alpha]\!]|^{1/2}\{\boldsymbol{S}_h\boldsymbol{u}_h\}_\gamma\|_{\mathcal{E}_h^c}^2+\kappa_2\|(2\mu h_{aa})^{1/2}[\![\boldsymbol{\varepsilon}(\boldsymbol{u}_h)]\!]\|_{\mathcal{E}_h^a}^2\\
&+\kappa_3\|(2\mu)^{-1/2}h_{aa}^{3/2}[\![\nabla p_h]\!]\|_{\mathcal{E}_h^a}^2+\delta\|h(\alpha/(2\mu))^{1/2}\nabla p_h\|_{0,\Omega_h}^2\\
&-2^{-1}\chi\|(\alpha/(2\mu))^{1/2}p_h\|_{0,\Omega_h}^2-\chi\lambda^{-2}C_I^2\|(2\mu\alpha)^{1/2}\nabla\boldsymbol{u}_h\|_{0,\tilde\Omega_h}^2. \qquad (4.20)
\end{aligned}
$$

Choosing $\kappa_2\ge 2^{-1}(1-\chi)\gamma_{aa}$ and using Lemma 5, we get

$$
\begin{aligned}
\mathcal{B}_h([\boldsymbol{u}_h,p_h];[\boldsymbol{u}_h,p_h])\ge&\ 2^{-1}C_e(1-\chi)\|(2\mu)^{1/2}\boldsymbol{\varepsilon}(\boldsymbol{u}_h)\|_{0,\Omega_h}^2\\
&+\big(\kappa_1-2C_I\big)\|\{2\mu/h\}_\gamma^{1/2}|[\![\alpha]\!]|^{1/2}\{\boldsymbol{S}_h\boldsymbol{u}_h\}_\gamma\|_{\mathcal{E}_h^c}^2+\delta\|h(\alpha/(2\mu))^{1/2}\nabla p_h\|_{0,\Omega_h}^2\\
&+\kappa_3\|(2\mu)^{-1/2}h_{aa}^{3/2}[\![\nabla p_h]\!]\|_{\mathcal{E}_h^a}^2-2^{-1}\chi\|(\alpha/(2\mu))^{1/2}p_h\|_{0,\Omega_h}^2-\chi\lambda^{-2}C_I^2\|(2\mu\alpha)^{1/2}\nabla\boldsymbol{u}_h\|_{0,\tilde\Omega_h}^2. \qquad (4.21)
\end{aligned}
$$

Applying Lemma 4 to the first term in (4.21) and recalling the definition of λ, we obtain

$$
\begin{aligned}
\mathcal{B}_h([\boldsymbol{u}_h,p_h];[\boldsymbol{u}_h,p_h])\ge&\ 2^{-1}C_e(1-\chi)C_K^{-1}\|(2\mu)^{1/2}\boldsymbol{u}_h\|_{0,\Omega_h}^2\\
&+C_K^{-1}\big(1-\chi^2\big)\big(4^{-1}C_e(1-\chi)-\chi\big)\|(2\mu)^{1/2}\nabla\boldsymbol{u}_h\|_{0,\Omega_h}^2\\
&+\big(\kappa_1-2C_I-C_e(1-\chi)\big)\|\{2\mu/h\}_\gamma^{1/2}|[\![\alpha]\!]|^{1/2}\{\boldsymbol{S}_h\boldsymbol{u}_h\}_\gamma\|_{\mathcal{E}_h^c}^2\\
&+\delta\|h(\alpha/(2\mu))^{1/2}\nabla p_h\|_{0,\Omega_h}^2+\kappa_3\|(2\mu)^{-1/2}h_{aa}^{3/2}[\![\nabla p_h]\!]\|_{\mathcal{E}_h^a}^2-2^{-1}\chi\|(\alpha/(2\mu))^{1/2}p_h\|_{0,\Omega_h}^2.
\end{aligned}
$$

For $\chi < 4^{-1}C_e\left(1+4^{-1}C_e\right)^{-1} < 1$ and choosing $\kappa_1 > 2C_I + C_e(1-\chi)$, we arrive at the following intermediate result.

Lemma 6. *Under the constraints on the choice of κ_1, κ_2 and χ stated above, one has*

$$\begin{aligned}\mathcal{B}_h([\boldsymbol{u}_h,p_h];[\boldsymbol{u}_h,p_h]) \geq\ & \sigma_{\mathcal{B}}\,\|\boldsymbol{u}_h\|_a^2 + \delta\,\|\,h\,(\alpha/(2\,\mu))^{1/2}\,\nabla p_h\|_{0,\Omega_h}^2 + \kappa_3\,\|\,(2\mu)^{-1/2}h_{aa}^{3/2}\,[\![\nabla p_h]\!]\|_{\mathcal{E}_h^a}^2 \\ & - 2^{-1}\chi\,\|(\alpha/(2\,\mu))^{1/2}\,p_h\|_{0,\Omega_h}^2\,,\end{aligned} \tag{4.22}$$

where $\sigma_{\mathcal{B}} = \min\left(C_K^{-1}\left(1-\chi^2\right)\left(4^{-1}C_e(1-\chi)-\chi\right),\ \kappa_1 - 2C_I - C_e(1-\chi)\right)$.

Step 2. *Use of the exact LBB condition to get extra control on the pressure p_h.*
We follow a strategy similar to the one used in the proof of Theorem 3 in [35]. We start by decomposing p_h as $p_h = p_{h0} + \bar{p}_h$, where p_{h0} has zero average in $\tilde{\Omega}_h$ and $\bar{p}_h$ is constant. By applying the LBB condition to the pair of spaces $H_0^1(\tilde{\Omega}_h)^{n_d}$ and $L_0^2(\tilde{\Omega}_h)$, we can find a constant $C_{LBB}^0 > 0$ independent of the meshsize and p_h, and a function $\hat{\boldsymbol{v}}_0 \in H_0^1(\tilde{\Omega}_h)^{n_d}$ such that $-(p_{h0}, \nabla\cdot\hat{\boldsymbol{v}}_0)_{\tilde{\Omega}_h} \geq C_{LBB}^0\,\|(2\mu)^{-1/2}p_{h0}\|_{0;\tilde{\Omega}_h}^2$, with $\|(2\mu)^{1/2}\,\hat{\boldsymbol{v}}_0\|_{1;\tilde{\Omega}_h} = \|(2\mu)^{-1/2}p_{h0}\|_{0;\tilde{\Omega}_h}$. Let $\hat{\boldsymbol{v}}_{0h} \in \boldsymbol{V}_h(\tilde{\Omega}_h) \cap H_0^1(\tilde{\Omega}_h)^{n_d}$ be the continuous finite element interpolant of $\hat{\boldsymbol{v}}_0$ defined by the Scott-Zhang operator, which satisfies $\|\hat{\boldsymbol{v}}_0 - \hat{\boldsymbol{v}}_{0h}\|_{0,\tilde{\Omega}_h} \leq C_{int}\|h\nabla\hat{\boldsymbol{v}}_0\|_{0,\tilde{\Omega}_h}$ and $\|(2\mu)^{1/2}\hat{\boldsymbol{v}}_{0h}\|_{1,\tilde{\Omega}_h} \leq C_{SZ}\|(2\mu)^{1/2}\hat{\boldsymbol{v}}_0\|_{1,\tilde{\Omega}_h} = C_{SZ}\|(2\mu)^{-1/2}p_{h0}\|_{0;\tilde{\Omega}_h}$, for constants $C_{int} > 0$ and $C_{SZ} > 0$ independent of the meshsize.

On the other hand, it is easy to build an element $\hat{\boldsymbol{w}}_h \in \boldsymbol{V}_h(\tilde{\Omega}_h)$ such that $-\int_{\tilde{\Omega}_h}\nabla\cdot\hat{\boldsymbol{w}}_h = -\int_{\partial\tilde{\Omega}_h}\hat{\boldsymbol{w}}_h\cdot\boldsymbol{n} = 1$ with $\|\hat{\boldsymbol{w}}_h\|_{1,\tilde{\Omega}_h} = O(1)$. Then, a multiple $\boldsymbol{w}_h = \omega\,\hat{\boldsymbol{w}}_h$ for a suitable ω will satisfy $-(\bar{p}_h, \nabla\cdot\boldsymbol{w}_h)_{\tilde{\Omega}_h} \geq \bar{C}_{LBB}\,\|(2\mu)^{-1/2}\bar{p}_h\|_{0;\tilde{\Omega}_h}^2$ for some constant $\bar{C}_{LBB} > 0$ independent of the meshsize and p_h, with $\|(2\mu)^{1/2}\,\boldsymbol{w}_h\|_{1;\tilde{\Omega}_h} = \|(2\mu)^{-1/2}\bar{p}_h\|_{0;\tilde{\Omega}_h}$.

Next, we define $\boldsymbol{v}_h^{p_h} := \rho\,\hat{\boldsymbol{v}}_{0h} + \boldsymbol{w}_h \in \boldsymbol{V}_h(\tilde{\Omega}_h)$, which satisfies

$$-(p_h, \nabla\cdot\boldsymbol{v}_h^{p_h})_{\tilde{\Omega}_h} = -\rho\,(p_{h0}, \nabla\cdot\hat{\boldsymbol{v}}_0)_{\tilde{\Omega}_h} - (\bar{p}_h, \nabla\cdot\boldsymbol{w}_h)_{\tilde{\Omega}_h} - (p_{h0}, \nabla\cdot\boldsymbol{w}_h)_{\tilde{\Omega}_h} + \rho\,(\nabla p_h, \hat{\boldsymbol{v}}_0 - \hat{\boldsymbol{v}}_{0h})_{\tilde{\Omega}_h}\,,$$

where, in the last term, we have performed an integration by parts, using the property that both $\hat{\boldsymbol{v}}_0$ and $\hat{\boldsymbol{v}}_{0h}$ vanish on $\partial\tilde{\Omega}_h$. Choosing $\rho > 0$ large enough, one can easily prove the following intermediate result.

Lemma 7. *There exist constants $C_{LBB} > 0$ and $C_{cont} > 0$ independent of the meshsize and p_h such that the function $\boldsymbol{v}_h^{p_h}$ built above satisfies*

$$-(p_h, \nabla\cdot\boldsymbol{v}_h^{p_h})_{\tilde{\Omega}_h} \geq C_{LBB}\|\,(2\mu)^{-1/2}p_h\|_{0,\tilde{\Omega}_h}^2 - \rho\,C_{int}\|(2\,\mu)^{-1/2}h\,\nabla p_h\|_{0;\tilde{\Omega}_h}\|(2\,\mu)^{-1/2}p_h\|_{0;\tilde{\Omega}_h}, \tag{4.23}$$

with $\|(2\mu)^{1/2}\,\boldsymbol{v}_h^{p_h}\|_{1;\tilde{\Omega}_h} \leq C_{cont}\|(2\mu)^{-1/2}p_h\|_{0;\tilde{\Omega}_h}$. □

Step 3. *Choice of $[\boldsymbol{w}_h, q_h] := [\boldsymbol{v}_h^{p_h}, 0]$ as a new test function in (4.7b).*
We extend $\boldsymbol{v}_h^{p_h}$ by zero in Ω_h^c, so that we can think of $\boldsymbol{v}_h^{p_h}$ as a function of $\boldsymbol{V}_h(\Omega_h)$. Since the trace of $\boldsymbol{v}_h^{p_h}$ on $\tilde{\Gamma}_h$ is zero, we have

$$\begin{aligned}\mathcal{B}_h([\boldsymbol{u}_h,p_h];[\boldsymbol{v}_h^{p_h},0]) &= a(\boldsymbol{u}_h,\boldsymbol{v}_h^{p_h}) + b(p_h,\boldsymbol{v}_h^{p_h}) = (2\mu\,\boldsymbol{\varepsilon}(\boldsymbol{u}_h)\,,\,\boldsymbol{\varepsilon}(\boldsymbol{v}_h^{p_h}))_{\tilde{\Omega}_h} - (\nabla\cdot\boldsymbol{v}_h^{p_h}, p_h)_{\tilde{\Omega}_h} \\ &\underbrace{-\langle\left\{\boldsymbol{S}_h\boldsymbol{u}_h\right\}_\gamma\otimes[\![\alpha]\!]\,,\,2\mu\,\gamma\,\boldsymbol{\varepsilon}(\boldsymbol{v}_h^{p_h})^+\rangle_{0,\tilde{\Gamma}_h}}_{A_1} + \underbrace{\langle\kappa_1\{2\,\mu/h\}_\gamma|[\![\alpha]\!]|\left\{\boldsymbol{S}_h\boldsymbol{u}_h\right\}_\gamma\,,\,\gamma\,(\nabla\boldsymbol{v}_h^{p_h})^+\,\boldsymbol{d}\rangle_{0,\tilde{\Gamma}_h}}_{A_2} \\ &+ \underbrace{\kappa_2\,\langle 2\,\mu\,h_{aa}\,[\![\boldsymbol{\varepsilon}(\boldsymbol{u}_h)]\!]\,,\,\boldsymbol{\varepsilon}(\boldsymbol{v}_h^{p_h})^+\,\tilde{\boldsymbol{n}}^+\rangle_{0,\tilde{\Gamma}_h}}_{A_3}\,.\end{aligned} \tag{4.24}$$

By Lemma 7, the first two terms on the right-hand side satisfy

$$\begin{aligned}&|(\boldsymbol{\varepsilon}(\boldsymbol{v}_h^{p_h}), 2\mu\,\boldsymbol{\varepsilon}(\boldsymbol{u}_h))_{0,\tilde{\Omega}_h}| \leq 2^{-1}\epsilon_4^{-1}\|(2\mu)^{1/2}\,\nabla\boldsymbol{u}_h\|_{0;\tilde{\Omega}_h}^2 + 2^{-1}C_{cont}\,\epsilon_4\|(2\,\mu)^{-1/2}p_h\|_{0;\tilde{\Omega}_h}^2\,, \\ &-(\nabla\cdot\boldsymbol{v}_h^{p_h}, p_h)_{0,\tilde{\Omega}_h} \geq C_{LBB}\|\,(2\mu)^{-1/2}p_h\|_{0,\tilde{\Omega}_h}^2 - 2^{-1}\epsilon_5^{-1}\|(2\,\mu)^{-1/2}h\,\nabla p_h\|_{0;\tilde{\Omega}_h}^2 - 2^{-1}\epsilon_5\,\rho^2C_{int}^2\|(2\,\mu)^{-1/2}p_h\|_{0;\tilde{\Omega}_h}^2\,.\end{aligned}$$

From Assumption 4 and inequality (3.15), choosing $\alpha^+ = 1$ on $\tilde{\Gamma}_h$, we get

$$\begin{aligned}|A_1| \leq&\|\sqrt{\frac{|\alpha^+-\alpha^-|}{\alpha^++\alpha^-}}\sqrt{\frac{\alpha^+h^-}{\alpha^+h^-+\alpha^-h^+}}\sqrt{2\mu\alpha^+h^+}\boldsymbol{\varepsilon}(\boldsymbol{v}_h^{p_h})^+\|_{0,\tilde{\Gamma}_h}\|\{2\mu/h\}_\gamma^{1/2}|[\![\alpha]\!]|^{1/2}\left\{\boldsymbol{S}_h\boldsymbol{u}_h\right\}_\gamma\|_{0,\tilde{\Gamma}_h} \\ \leq&\frac{C_I}{2\,\epsilon_6}\|(2\,\mu)^{1/2}\nabla\boldsymbol{v}_h^{p_h}\|_{0,\tilde{\Omega}_h}^2 + \frac{\epsilon_6}{2}\,\|\{2\,\mu/h\}_\gamma^{1/2}|[\![\alpha]\!]|^{1/2}\left\{\boldsymbol{S}_h\boldsymbol{u}_h\right\}_\gamma\|_{0,\tilde{\Gamma}_h}^2 \\ \leq&\frac{C_I\,C_{cont}}{2\,\epsilon_6}\|(2\,\mu)^{-1/2}p_h\|_{0,\tilde{\Omega}_h}^2 + \frac{\epsilon_6}{2}\,\|\{2\,\mu/h\}_\gamma^{1/2}|[\![\alpha]\!]|^{1/2}\left\{\boldsymbol{S}_h\boldsymbol{u}_h\right\}_\gamma\|_{0,\tilde{\Gamma}_h}^2\,, \\ |A_2| \leq&\,\kappa_1\,\|\{2\,\mu/h\}_\gamma^{1/2}|[\![\alpha]\!]|^{1/2}\left\{\boldsymbol{S}_h\boldsymbol{u}_h\right\}_\gamma\|_{0,\tilde{\Gamma}_h}\times \\ &\times\,\|(2\,\mu/h^*)^{1/2}\sqrt{h^+}\,|[\![\alpha]\!]|^{1/2}(\nabla\boldsymbol{v}_h^{p_h})^+\|_{0,\tilde{\Gamma}_h}\,\|\boldsymbol{d}/\sqrt{h^+}\|_{L^\infty(\tilde{\Gamma}_h)} \\ \leq&\left(\frac{\kappa_1\,C_I}{2\,\epsilon_7}\|\sqrt{2\,\mu}\,\nabla\boldsymbol{v}_h^{p_h}\|_{0,\tilde{\Omega}_h}^2 + \frac{\kappa_1\,\epsilon_7}{2}\,\|\,\{2\,\mu/h\}_\gamma^{1/2}|[\![\alpha]\!]|^{1/2}\left\{\boldsymbol{S}_h\boldsymbol{u}_h\right\}_\gamma\|_{0,\tilde{\Gamma}_h}^2\right)\|\boldsymbol{d}/h^*\|_{L^\infty(\tilde{\Gamma}_h)} \\ \leq&\frac{\kappa_1\,C_I\,C_{cont}\,\chi\,\zeta}{2\,\epsilon_7}\|(2\,\mu)^{-1/2}p_h\|_{0,\tilde{\Omega}_h}^2 + \frac{\kappa_1\,\epsilon_7\,\chi\,\zeta}{2}\,\|\,\{2\,\mu/h\}_\gamma^{1/2}|[\![\alpha]\!]|^{1/2}\left\{\boldsymbol{S}_h\boldsymbol{u}_h\right\}_\gamma\|_{0,\tilde{\Gamma}_h}^2\,,\end{aligned}$$

$$
\begin{aligned}
|A_3| &\le \kappa_2 \,\| \sqrt{\frac{2\,\mu\, h^+ h^-}{h^+ + h^-}}\, \boldsymbol{\varepsilon}(\boldsymbol{v}_h^{p_h})^+ \,\|_{0,\tilde{\Gamma}_h} \times \left(\| \sqrt{\frac{2\,\mu\, h^+ h^-}{h^+ + h^-}}\, \boldsymbol{\varepsilon}(\boldsymbol{u}_h)^+ \,\|_{0,\tilde{\Gamma}_h} + \| \sqrt{\frac{2\,\mu\, h^+ h^-}{h^+ + h^-}}\, \boldsymbol{\varepsilon}(\boldsymbol{u}_h)^- \,\|_{0,\tilde{\Gamma}_h} \right) \\
&\le \frac{\kappa_2\, C_I}{2\,\epsilon_8} \| (2\,\mu)^{1/2}\, \nabla \boldsymbol{v}_h^{p_h} \|^2_{0,\tilde{\Omega}_h} + \frac{\kappa_2\, C_I\, \epsilon_8}{2} \| (2\,\mu)^{1/2}\, \boldsymbol{\varepsilon}(\boldsymbol{u}_h) \|^2_{0,\Omega_h} \\
&\le \frac{\kappa_2\, C_I\, C_{cont}}{2\,\epsilon_8} \| (2\,\mu)^{-1/2} p_h \|^2_{0,\tilde{\Omega}_h} + \frac{\kappa_2\, C_I\, \epsilon_8}{2} \| (2\,\mu)^{1/2}\, \nabla \boldsymbol{u}_h \|^2_{0,\Omega_h} \,.
\end{aligned}
$$

Step 4. *Choice of* $[\boldsymbol{w}_h, q_h] := [\theta\, \boldsymbol{u}_h + \boldsymbol{v}_h^{p_h}, \theta\, p_h]$ *as the final test function in* (4.7b).
Let $\theta > 0$ be a parameter to be chosen later on. We combine the inequality of Lemma 6 with those derived in Step 3 above. Taking $\epsilon_4 = 5^{-1} C_{cont}^{-1} C_{LBB}$, $\epsilon_5 = 5^{-1} \rho^{-2} C_{int}^{-2} C_{LBB}$, $\epsilon_6 = 5\, C_I\, C_{cont}\, C_{LBB}^{-1}$, $\epsilon_7 = 5\, \chi\, \zeta\, \kappa_1\, C_I\, C_{cont} C_{LBB}^{-1}$, and $\epsilon_8 = 5 \kappa_2\, C_I C_{cont} C_{LBB}^{-1}$, gives

$$
\begin{aligned}
\mathcal{B}_h([\boldsymbol{u}_h, p_h]; [\theta\, \boldsymbol{u}_h + \boldsymbol{v}_h^{p_h}, \theta\, p_h]) \ge\ & \theta\, \sigma_{\mathcal{B}} \| (2\mu)^{1/2}\, \boldsymbol{u}_h \|^2_{\Omega_h} \\
& + \left(\theta\, \sigma_{\mathcal{B}} - (5/2)\, C_{cont}\, C_{LBB}^{-1} \left(1 + \kappa_2^2 C_I\right)\right) \| (2\mu)^{1/2}\, \nabla \boldsymbol{u}_h \|^2_{\Omega_h} \\
& + \left(\theta\, \sigma_{\mathcal{B}} - (5/2)\, C_I\, C_{cont}\, C_{LBB}^{-1} \left(1 + \kappa_1^2\, \chi^2\, \zeta^2\right)\right) \| \{2\,\mu/h\}_\gamma^{1/2} |[\![\alpha]\!]|^{1/2} \left\{ \boldsymbol{S}_h \boldsymbol{u}_h \right\}_\gamma \|^2_{\mathcal{E}_h^c} \\
& + \left(\theta\, \delta - (5/2)\, \rho^2 C_{int}^2 C_{LBB}^{-1}\right) \| h\, (\alpha/(2\,\mu))^{1/2}\, \nabla p_h \|^2_{0,\Omega_h} \\
& + \theta\, \kappa_3 \,\| (2\mu)^{-1/2} h_{aa}^{3/2} [\![\nabla p_h]\!] \|^2_{\mathcal{E}_h^a} + 2^{-1} C_{LBB} \| (2\,\mu)^{-1/2}\, p_h \|^2_{0,\tilde{\Omega}_h} \\
& - 2^{-1}\, \chi\, \theta \,\| (\alpha/(2\,\mu))^{1/2}\, p_h \|^2_{0,\Omega_h} \,.
\end{aligned} \tag{4.26}
$$

Let us pick

$$
\theta > (5/2)\, C_{LBB}^{-1}\, \max\left(\sigma_{\mathcal{B}}^{-1} C_{cont} \left(1 + \kappa_2^2 C_I\right), \sigma_{\mathcal{B}}^{-1} C_I\, C_{cont} \left(1 + \kappa_1^2\, \chi^2 \zeta^2\right), \delta^{-1} \rho^2 C_{int}^2\right); \tag{4.27}
$$

in this way, the coefficients of the first four terms in (4.26) are strictly positive, and we denote by ω_z the smallest of them. Choosing κ_3 large enough to satisfy $\theta\, \kappa_3 \ge C_{LBB}\, \gamma_z$, an application of Lemma 5 yields

$$
\begin{aligned}
\mathcal{B}_h([\boldsymbol{u}_h, p_h]; [\theta\, \boldsymbol{u}_h + \boldsymbol{v}_h^{p_h}, \theta\, p_h]) \ge\ & \omega_z \,\| (2\mu)^{1/2}\, \boldsymbol{u}_h \|^2_{\Omega_h} + \omega_z \| (2\mu)^{1/2}\, \nabla \boldsymbol{u}_h \|^2_{\Omega_h} \\
& + \omega_z \| \{2\,\mu/h\}_\gamma^{1/2} |[\![\alpha]\!]|^{1/2} \left\{ \boldsymbol{S}_h \boldsymbol{u}_h \right\}_\gamma \|^2_{\mathcal{E}_h^c} + \omega_z \| h\, (\alpha/(2\,\mu))^{1/2}\, \nabla p_h \|^2_{0,\Omega_h} \\
& + 2^{-1} \theta\, \kappa_3 \,\| (2\mu)^{-1/2} h_{aa}^{3/2} [\![\nabla p_h]\!] \|^2_{\mathcal{E}_h^a} + 2^{-1} \left(C_{LBB}\, C_z - \chi\, \theta\right) \| (2\,\mu)^{-1/2}\, p_h \|^2_{0,\Omega_h} \,.
\end{aligned}
$$

This gives the desired inequality (4.16a) with constant

$$
\beta_{LBB} := \min\left(\omega_z\,,\, 2^{-1} \theta\, \kappa_3\,,\, 2^{-1} \left(C_{LBB}\, C_z - \chi\, \theta\right)\right), \tag{4.28}
$$

provided χ is small enough to guarantee $C_{LBB}\, C_z - \chi\, \theta > 0$. This concludes the proof of Theorem 4. □

4.3. Consistency and convergence analysis

In view of the subsequent analysis, let us introduce the extended spaces $\boldsymbol{V}(\Omega_h; \mathcal{T}_h)$ and $Q(\Omega_h)$, where

$$
\boldsymbol{V}(\Omega_h; \mathcal{T}_h) := \boldsymbol{V}_h(\Omega_h) + H^2(\Omega_h)^{n_d} \ \subset H^2(\Omega_h; \mathcal{T}_h)^{n_d} \,, \tag{4.29a}
$$

$$
Q(\Omega_h; \mathcal{T}_h) := \ Q_h(\Omega_h) + Q(\Omega_h) \,, \tag{4.29b}
$$

with $Q(\Omega_h) := H^1(\Omega_h)$ if $\Gamma_N \neq \emptyset$ or $Q(\Omega_h) := H^1(\Omega_h) \cap L^2_0(\Omega_h)$ if $\Gamma_N = \emptyset$. We define the product space $\boldsymbol{W}(\Omega_h; \mathcal{T}_h) := \boldsymbol{V}(\Omega_h; \mathcal{T}_h) \times Q(\Omega_h)$, equipped by the norm

$$
\| [\boldsymbol{v}, q] \|_{\boldsymbol{W}(\Omega_h; \mathcal{T}_h)} = \| [\boldsymbol{v}, q] \|_{\mathcal{B}} + |(2\mu)^{1/2} h\, \boldsymbol{v}|_{2;\Omega_h;\mathcal{T}_h} + \|(2\mu)^{-1/2} h \nabla q\|_{0,\Omega_h} \,. \tag{4.30}
$$

The bilinear form $\mathcal{B}_h$ can be extended to be defined on the product space $\boldsymbol{W}(\Omega_h; \mathcal{T}_h) \times \boldsymbol{W}_h(\Omega_h)$. The only term which requires attention is the penalty $\kappa_3\, \langle (2\,\mu)^{-1} h_{aa}^3\, [\![\nabla p]\!], [\![\nabla q]\!] \rangle_{\mathcal{E}_h^a}$, since the trace of the gradient on an edge/face $E \in \mathcal{E}_h^a$ may not be meaningful for functions $p \in Q(\Omega_h)$. However, for a function $p \in H^1(T)$ we can define an average gradient on T by setting

$$
\nabla^a p := \frac{1}{|T|} \int_T \nabla p \,; \tag{4.31}
$$

this makes sense, since $\nabla^a p_h = \nabla p_h$ if $p_h \in \mathbb{P}_1(T)$. Thus, we can define the jump $[\![\nabla p]\!]$ across an edge/face E using the average gradients $\nabla^a p^+$ and $\nabla^a p^-$ on both sides of E.

We show next that the bilinear form $\mathcal{B}_h$ so extended is uniformly bounded (hence, continuous) on $\boldsymbol{W}(\Omega_h; \mathcal{T}_h) \times \boldsymbol{W}_h(\Omega_h)$.

Proposition 5 (Boundedness). *There exists a constant* $C_{\mathcal{B}} > 0$*, independent of the mesh size, such that for all* $[\boldsymbol{v}, p] \in \boldsymbol{W}(\Omega_h; \mathcal{T}_h)$ *and all* $[\boldsymbol{w}_h, q_h] \in \boldsymbol{W}_h(\Omega_h)$*, one has*

$$
|\mathcal{B}_h([\boldsymbol{v}, p]; [\boldsymbol{w}_h, q_h])| \le C_{\mathcal{B}} \,\| [\boldsymbol{v}, p] \|_{\boldsymbol{W}(\Omega_h; \mathcal{T}_h)} \,\| [\boldsymbol{w}_h, q_h] \|_{\boldsymbol{W}(\Omega_h)} \,. \tag{4.32}
$$

Proof.
Adding and subtracting $\langle \{ \boldsymbol{S}_h \boldsymbol{w}_h - \boldsymbol{w}_h \}_\gamma \otimes [\![\alpha]\!] , \{ 2\mu\, \boldsymbol{\varepsilon}(\boldsymbol{v}) - p \boldsymbol{I} \}_\gamma \rangle_{\mathcal{E}_h^c}$, we get

$$
\begin{aligned}
\mathcal{B}_h([\boldsymbol{v}, p]; [\boldsymbol{w}_h, p_h]) = \; & (2\mu\, \boldsymbol{\varepsilon}(\boldsymbol{v}) , \alpha\, \boldsymbol{\varepsilon}(\boldsymbol{w}_h))_{\Omega_h} - (p , \alpha \nabla \cdot \boldsymbol{w}_h)_{\Omega_h} + (\nabla \cdot \boldsymbol{v} , \alpha\, q_h)_{\Omega_h} \\
& + \langle \{ \boldsymbol{S}_h \boldsymbol{w}_h - \boldsymbol{w}_h \}_\gamma \otimes [\![\alpha]\!] , \{ 2\mu\, \boldsymbol{\varepsilon}(\boldsymbol{v}) - p \boldsymbol{I} \}_\gamma \rangle_{\mathcal{E}_h^c} \\
& - \langle \{ \boldsymbol{S}_h \boldsymbol{w}_h \}_\gamma \otimes [\![\alpha]\!] , \{ 2\mu\, \boldsymbol{\varepsilon}(\boldsymbol{v}) - p \boldsymbol{I} \}_\gamma \rangle_{\mathcal{E}_h^c} - \langle \{ \boldsymbol{S}_h \boldsymbol{v} \}_\gamma \otimes [\![\alpha]\!] , \{ 2\mu\, \boldsymbol{\varepsilon}(\boldsymbol{w}_h) + q_h \boldsymbol{I} \}_\gamma \rangle_{\mathcal{E}_h^c} \\
& + \langle \kappa_1 \{ 2\mu/h \}_\gamma |[\![\alpha]\!]| \{ \boldsymbol{S}_h \boldsymbol{v} \}_\gamma , \{ \boldsymbol{S}_h \boldsymbol{w}_h \}_\gamma \rangle_{\mathcal{E}_h^c} + \delta \sum_{T \in \mathcal{T}_h} \left(h^2 (2\mu)^{-1} (-\nabla \cdot (2\mu \boldsymbol{\varepsilon}(\boldsymbol{v})) + \nabla p), \alpha \nabla q_h \right)_T \\
& + \kappa_2 \langle 2\mu\, h_{aa} [\![\boldsymbol{\varepsilon}(\boldsymbol{v})]\!] , [\![\boldsymbol{\varepsilon}(\boldsymbol{w}_h)]\!] \rangle_{\mathcal{E}_h^a} + \kappa_3 \langle (2\mu)^{-1} h_{aa}^3 [\![\nabla p]\!] , [\![\nabla q_h]\!] \rangle_{\mathcal{E}_h^a} .
\end{aligned}
$$

We now observe that $\boldsymbol{S}_h \boldsymbol{w}_h - \boldsymbol{w}_h = (\nabla \boldsymbol{w}_h) \boldsymbol{d}$ by (2.9), and that $\alpha \in [0, 1]$. Repeatedly using (3.15) and its extension (3.25), we get

$$
\begin{aligned}
|\mathcal{B}_h([\boldsymbol{v}, p]; [\boldsymbol{w}_h, q_h])| \leq \; & \| (2\mu)^{1/2}\, \boldsymbol{\varepsilon}(\boldsymbol{v}) \|_{0;\Omega_h} \| (2\mu)^{1/2}\, \boldsymbol{\varepsilon}(\boldsymbol{w}_h) \|_{0;\Omega_h} \\
& + \| (2\mu)^{-1/2}\, p \|_{0;\Omega_h} \| (2\mu)^{1/2}\, \nabla \cdot \boldsymbol{w}_h \|_{0;\Omega_h} + \| (2\mu)^{1/2} \nabla \cdot \boldsymbol{v} \|_{0;\Omega_h} \| (2\mu)^{-1/2} q_h \|_{0;\Omega_h} \\
& + C_I\, \chi\, \zeta \Big(\| (2\mu)^{1/2}\, \boldsymbol{\varepsilon}(\boldsymbol{v}) \|_{0;\Omega_h} + \| (2\mu)^{-1/2} p \|_{0;\Omega_h} \Big) \| (2\mu)^{1/2}\, \nabla \boldsymbol{w}_h \|_{0;\Omega_h} \\
& + C_I\, \chi\, \zeta \Big(\| (2\mu)^{1/2}\, h\, \nabla \boldsymbol{\varepsilon}(\boldsymbol{v}) \|_{0;\Omega_h} + \| (2\mu)^{-1/2} h\, \nabla p \|_{0;\Omega_h} \Big) \| (2\mu)^{1/2}\, \nabla \boldsymbol{w}_h \|_{0;\Omega_h} \\
& + 2\, C_I^{1/2} \Big(\| (2\mu)^{1/2}\, \boldsymbol{\varepsilon}(\boldsymbol{v}) \|_{0;\Omega_h} + \| (2\mu)^{-1/2} p \|_{0;\Omega_h} \Big) \| \{ 2\mu/h \}_\gamma^{1/2} |[\![\alpha]\!]|^{1/2} \{ \boldsymbol{S}_h \boldsymbol{w}_h \}_\gamma \|_{0;\mathcal{E}_h^c} \\
& + 2\, C_I^{1/2} \Big(\| (2\mu)^{1/2}\, h\, \nabla \boldsymbol{\varepsilon}(\boldsymbol{v}) \|_{0;\Omega_h} + \| (2\mu)^{-1/2}\, h\, \nabla p \|_{0;\Omega_h} \Big) \| \{ 2\mu/h \}_\gamma^{1/2} |[\![\alpha]\!]|^{1/2} \{ \boldsymbol{S}_h \boldsymbol{w}_h \}_\gamma \|_{0;\mathcal{E}_h^c} \\
& + 2\, C_I^{1/2} \| \{ 2\mu/h \}_\gamma^{1/2} |[\![\alpha]\!]|^{1/2} \{ \boldsymbol{S}_h \boldsymbol{v} \}_\gamma \|_{0;\mathcal{E}_h^c} \Big(\| (2\mu)^{1/2} \boldsymbol{\varepsilon}(\boldsymbol{w}_h) \|_{0;\Omega_h} + \| (2\mu)^{-1/2} q_h \|_{0;\Omega_h} \Big) \\
& + \kappa_1 \| \{ 2\mu/h \}_\gamma^{1/2} |[\![\alpha]\!]|^{1/2} \{ \boldsymbol{S}_h \boldsymbol{v} \}_\gamma \|_{0;\mathcal{E}_h^c} \| \{ 2\mu/h \}_\gamma^{1/2} |[\![\alpha]\!]|^{1/2} \{ \boldsymbol{S}_h \boldsymbol{w}_h \}_\gamma \|_{0;\mathcal{E}_h^c} \\
& + \delta \Big(\| (\alpha/2\mu)^{1/2} h\, \nabla p \|_{0;\Omega_h} + \| (2\mu)^{1/2} h\, \nabla \cdot \boldsymbol{\varepsilon}(\boldsymbol{v}) \|_{0;\Omega_h;\mathcal{T}_h} \Big) \| (\alpha/2\mu)^{1/2} h\, \nabla q_h \|_{0;\Omega_h} \\
& + \kappa_2\, C_I \| (2\mu)^{1/2} \boldsymbol{\varepsilon}(\boldsymbol{v}) \|_{0;\Omega_h} \| (2\mu)^{1/2} \boldsymbol{\varepsilon}(\boldsymbol{w}_h) \|_{0;\Omega_h} \\
& + \kappa_3 \| (2\mu)^{-1} h_{aa}^3 [\![\nabla p]\!] \|_{0;\Omega_h} \| (2\mu)^{-1} h_{aa}^3 [\![\nabla q_h]\!] \|_{0;\Omega_h} ,
\end{aligned}
\tag{4.33}
$$

which gives the result, with a constant $C_{\mathcal{B}}$ depending upon C_I, $\chi\, \zeta$, κ_1, κ_2, κ_3, and δ. □

From now on we pose the following regularity assumption, which is fulfilled if $\boldsymbol{f} \in L^2(\Omega)^{n_d}$ and, e.g., $\partial\Omega$ is C^2, $\Gamma_N = \emptyset$ and $\boldsymbol{u}_D \in H^{3/2}(\partial\Omega)^{n_d}$ with $\boldsymbol{u}_D \cdot \boldsymbol{n} = 0$ on $\partial\Omega$.

Assumption 5. The solution of the Stokes problem (4.1) satisfies $[\boldsymbol{u}, p] \in H^2(\Omega)^{n_d} \times H^1(\Omega)$.

When $\Omega_h \not\subseteq \Omega$, we need to extend the velocity and pressure fields $[\boldsymbol{u}, p]$ to a larger domain Ω_{ext}, such that $\text{clos}(\Omega_h) \subset \Omega_{\text{ext}}$.

Proposition 6 (Existence of extensions). *Assume that $\partial\Omega$ is of class C^2. There exist extensions $(\bar{\boldsymbol{u}}, \bar{p}, \bar{\boldsymbol{f}})$ of $(\boldsymbol{u}, p, \boldsymbol{f})$ to Ω_{ext}, such that:*

i) Equations $-\nabla \cdot (2\mu\, \boldsymbol{\varepsilon}(\bar{\boldsymbol{u}}) - \bar{p} \boldsymbol{I}) = \bar{\boldsymbol{f}}$ and $\nabla \cdot \bar{\boldsymbol{u}} = 0$ hold true in Ω_{ext};
ii) if $[\boldsymbol{u}, p] \in H^2(\Omega)^{n_d} \times H^1(\Omega)$, then $[\bar{\boldsymbol{u}}, \bar{p}] \in H^2(\Omega_{\text{ext}})^{n_d} \times H^1(\Omega_{\text{ext}})$, with $\| \bar{\boldsymbol{u}} \|_{H^2(\Omega_{\text{ext}})^{n_d}} \leq C \| \boldsymbol{u} \|_{H^2(\Omega)^{n_d}}$ and $\| \bar{p} \|_{H^1(\Omega_{\text{ext}})} \leq C \| p \|_{H^1(\Omega)}$.

Proof. Thanks to the assumption on $\partial\Omega$, there exists a continuous extension operator from $H^2(\Omega)^{n_d}$ to $H^2(\Omega_{\text{ext}})^{n_d}$ which preserves solenoidal fields (see [46]). On the other hand, the existence of a continuous extension operator from $H^1(\Omega)$ to $H^1(\Omega_{\text{ext}})$ follows from classical results on Sobolev spaces (see, e.g. [42]). The extension of $\boldsymbol{f}$ is obtained by setting $\bar{\boldsymbol{f}} := -\nabla \cdot (2\mu\, \boldsymbol{\varepsilon}(\bar{\boldsymbol{u}}) - \bar{p} \boldsymbol{I})$. □

The Galerkin orthogonality property holds for our SBM discretization of the Stokes problem.

Lemma 8 (Galerkin orthogonality). *Assume that the right-hand side (4.7) uses the extension $\bar{\boldsymbol{f}}$ from Proposition 6. Then, the corresponding extended solution $[\bar{\boldsymbol{u}}, \bar{p}]$ satisfies*

$$
\mathcal{B}_h([\bar{\boldsymbol{u}}, \bar{p}] - [\boldsymbol{u}_h, p_h], [\boldsymbol{w}_h, q_h]) = 0 , \qquad \forall [\boldsymbol{w}_h, q_h] \in \boldsymbol{W}_h(\Omega_h).
\tag{4.34}
$$

Proof. The extended functions $\bar{\boldsymbol{u}}, \bar{p}$ and $\bar{\boldsymbol{f}}$ satisfy eq. (4.4) for any $[\boldsymbol{w}_h, q_h] \in \boldsymbol{W}_h(\Omega_h)$; in addition, they annihilate the penalization or stabilization terms appearing in the definition of the forms $\mathcal{B}_h$ and $\mathcal{L}_h$. Furthermore, $\bar{\boldsymbol{u}}$ satisfies $\boldsymbol{S}_h \bar{\boldsymbol{u}} = \mathbb{E}_h \boldsymbol{u}_D$ on $\mathcal{E}_h^c$. Hence, $[\bar{\boldsymbol{u}} , \bar{p}]$ satisfies

$$
\mathcal{B}_h([\bar{\boldsymbol{u}} , \bar{p}]; [\boldsymbol{w}_h , q_h]) = \mathcal{L}_h([\boldsymbol{w}_h , q_h]) , \qquad \forall [\boldsymbol{w}_h, q_h] \in \boldsymbol{W}_h(\Omega_h) .
$$

Subtracting (4.7), we get the result. □

In analogy with Proposition 3, Galerkin orthogonality implies the following abstract error estimate.

Proposition 7 (Abstract error bound). *Under the previous assumptions, it holds*

$$\| [\bar{\boldsymbol{u}}, \bar{p}] - [\boldsymbol{u}_h, p_h] \|_{\boldsymbol{W}(\Omega_h;\mathcal{T}_h)} \leq \left(1 + \frac{C_{\mathcal{B}}}{\alpha_{LBB}}\right) \inf_{[\boldsymbol{w}_h, q_h] \in \boldsymbol{W}_h(\Omega_h)} \| [\bar{\boldsymbol{u}}, \bar{p}] - [\boldsymbol{w}_h, q_h] \|_{\boldsymbol{W}(\Omega_h;\mathcal{T}_h)} . \tag{4.35}$$

Proposition 8 (Approximability). *Under Assumptions 4 and 5, there exists a constant $C_{\mathrm{APP}} > 0$ independent of the mesh size such that*

$$\inf_{[\boldsymbol{w}_h, q_h] \in \boldsymbol{W}_h(\Omega_h)} \| [\bar{\boldsymbol{u}}, \bar{p}] - [\boldsymbol{w}_h, q_h] \|_{\boldsymbol{W}(\Omega_h;\mathcal{T}_h)} \leq C_{\mathrm{APP}}\, h_{\Omega_h} \left(| \bar{\boldsymbol{u}} |_{2,\Omega_h} + | \bar{p} |_{1,\Omega_h} \right) \tag{4.36}$$

for any $[\bar{\boldsymbol{u}}, \bar{p}] \in \boldsymbol{W}(\Omega_h; \mathcal{T}_h)$.

Proof. Let $[\boldsymbol{w}_h, q_h] = [\boldsymbol{I}_h^{SZ} \bar{\boldsymbol{u}}, I_h^{SZ} \bar{p}]$, where $\boldsymbol{I}_h^{SZ}$ is the Scott-Zhang piecewise-linear quasi-interpolant on the triangulation $\mathcal{T}_h$, whereas I_h^{SZ} is the Scott-Zhang quasi-interpolant on the same grid, corrected by an additive constant to satisfy the zero-average condition in the pure Dirichlet case. The goal is to estimate

$$\begin{aligned}
\| [\bar{\boldsymbol{u}}, \bar{p}] - [\boldsymbol{w}_h, q_h] \|_{\boldsymbol{W}(\Omega_h;\mathcal{T}_h)} \leq{}& \| (2\,\mu)^{1/2} (\bar{\boldsymbol{u}} - \boldsymbol{w}_h) \|_{0,\Omega_h}^2 + \| (2\,\mu)^{1/2} \nabla (\bar{\boldsymbol{u}} - \boldsymbol{w}_h) \|_{0,\Omega_h}^2 \\
&+ \| \{2\,\mu/h\}_\gamma^{1/2} |[\![\alpha]\!]|^{1/2} \left\{ \boldsymbol{S}_h (\bar{\boldsymbol{u}} - \boldsymbol{w}_h) \right\}_\gamma \|_{\mathcal{E}_h^c}^2 + \| (2\mu)^{1/2} h\, \nabla \boldsymbol{\varepsilon} (\bar{\boldsymbol{u}} - \boldsymbol{w}_h) \|_{0;\Omega_h;\mathcal{T}_h}^2 \\
&+ \| (2\mu)^{-1/2} (\bar{p} - q_h) \|_{0,\Omega_h}^2 + \| (2\mu)^{1/2}\, h\, \nabla (\bar{p} - q_h) \|_{0,\Omega_h}^2 + \| (2\mu)^{-1/2} h_{aa}^{3/2} [\![\nabla (\bar{p} - q)]\!] \|_{0;\Omega_h}^2 .
\end{aligned}$$

For simplicity, let us set $\delta \bar{\boldsymbol{u}} = \bar{\boldsymbol{u}} - \boldsymbol{I}_h^{SZ} \bar{\boldsymbol{u}}$ and $\delta \bar{p} = \bar{p} - I_h^{SZ} \bar{p}$. By classical interpolation results

$$\| (2\mu)^{1/2} h^{-1} \delta \bar{\boldsymbol{u}} \|_{0;\Omega_h} + \| (2\mu)^{1/2} \nabla \delta \bar{\boldsymbol{u}} \|_{0;\Omega_h} \leq C_1 h_{\Omega_h} |(2\mu)^{1/2} \bar{\boldsymbol{u}}|_{2,\Omega_h}$$

and

$$\| (2\mu)^{-1/2} \delta \bar{p} \|_{0;\Omega_h} + \| (2\mu)^{-1/2} h\, \nabla \delta \bar{p} \|_{0;\Omega_h} \leq C_2 h_{\Omega_h} \| \nabla \bar{p} \|_{0,\Omega_h} ,$$

whereas

$$\| (2\mu)^{1/2} h\, \nabla \boldsymbol{\varepsilon} (\delta \bar{\boldsymbol{u}}) \|_{0;\Omega_h;\mathcal{T}_h}^2 = \| (2\mu)^{1/2} h\, \nabla \boldsymbol{\varepsilon} (\bar{\boldsymbol{u}}) \|_{0;\Omega_h;\mathcal{T}_h}^2 \leq C_3 h_{\Omega_h} |(2\mu)^{1/2} \bar{\boldsymbol{u}}|_{2,\Omega_h} .$$

On the other hand, proceeding component-by-component as in the proof of Proposition 4, one gets

$$\| \{2\,\mu/h\}_\gamma^{1/2} |[\![\alpha]\!]|^{1/2} \left\{ \boldsymbol{S}_h \delta \bar{\boldsymbol{u}} \right\}_\gamma \|_{\mathcal{E}_h^c} \leq C_4 h_{\Omega_h} |(2\mu)^{1/2} \bar{\boldsymbol{u}}|_{2,\Omega_h} .$$

Finally, recalling the definition (4.31) of extended gradient of a function $p \in H^1(T)$, we easily estimate its Euclidean norm on T by $| \nabla^a p | \leq C_5\, h_T^{-n_d/2-1} \| h\, \nabla p \|_{0,T}$, whence, if $E = \partial T^+ \cap \partial T^-$,

$$\int_E (2\mu)^{-1}\, h_{aa}^3\, [\![\nabla p]\!]^2 \leq C_6 (\| (2\mu)^{-1/2}\, h^+\, \nabla p^+ \|_{0,T^+}^2 + \| (2\mu)^{-1/2}\, h^-\, \nabla p^- \|_{0,T^-}^2) .$$

This yields

$$\| (2\mu)^{-1/2} h_{aa}^{3/2} [\![\nabla (\delta \bar{p})]\!] \|_{\mathcal{E}_h^a} \leq C_7 \| (2\mu)^{-1/2}\, h\, \nabla (\delta \bar{p}) \|_{0,\Omega_h} \leq C_8\, h_{\Omega_h} \| (2\mu)^{-1/2}\, \nabla \bar{p} \|_{0,\Omega_h} .$$

Collecting all the previous inequalities, we get the desired estimate. □

Combining Propositions 7 and 8, we obtain the following convergence result.

Theorem 5 (Convergence in the natural norm). *Under Assumptions 4–5 and the validity of the conditions stated in Theorem 4, the numerical solution $[\boldsymbol{u}_h, p_h]$ of the SB method satisfies the following error estimate:*

$$\| [\bar{\boldsymbol{u}}, \bar{p}] - [\boldsymbol{u}_h, p_h] \|_{\boldsymbol{W}(\Omega_h;\mathcal{T}_h)} \leq C\, h_{\Omega_h} \left(| \bar{\boldsymbol{u}} |_{2,\Omega_h} + | \bar{p} |_{1,\Omega_h} \right) , \tag{4.37}$$

where $[\bar{\boldsymbol{u}}, \bar{p}] \in H^2(\Omega_{ext})^{n_d} \times H^1(\Omega_{ext})$ is the extended solution of the Stokes problem (4.1) and $C > 0$ is a constant independent of the mesh size and the solution.

Remark 5 (Enhanced L^2 error estimate for velocity). Under the same assumptions of Theorem 5, one can prove the existence of a constant $C > 0$ such that

$$\| \alpha\, (\bar{\boldsymbol{u}} - \boldsymbol{u}_h) \|_{0,\Omega_h} \leq C\, h_{\Omega_h}^{3/2} \left(| \bar{\boldsymbol{u}} |_{2,\Omega_h} + | \bar{p} |_{1,\Omega_h} \right) .$$

We avoid presenting the proof, which is long and technical but just extends to the Stokes setting the Aubin-Nitsche argument given in the proof of the analogous result for the scalar case (see Theorem 3).

Remark 6 (Numerical results). Several numerical experiments, documenting the superior quality of WSBM over standard SBM, can be found in [39,40], to which we refer the reader.

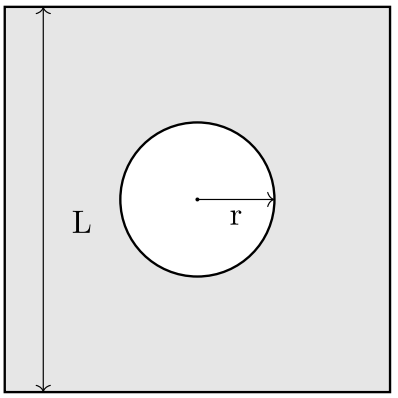

(a) The domain Ω (dark grey).

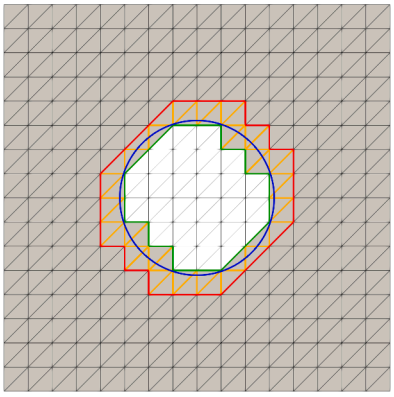

(b) $\tilde{\Omega}_h$ (grey), Γ (blue), $\tilde{\Gamma}_h$ (red), $\hat{\Gamma}_h$ (green) and $\mathcal{E}_h^{c;\circ}$ (orange).

Fig. 2. A square domain with a circular hole centered at (0.5, 0.5) with $L = 1$ and $r = 0.2$.

5. Numerical tests

In this section, we perform convergence tests for the proposed WSBM approach for the Poisson and Stokes flow equations using the geometries shown in Figs. 2a, 3a, 3b, and 3c. Their corresponding surrogate domains, $\tilde{\Omega}_h$, outer surrogate ($\tilde{\Gamma}_h$), inner surrogate ($\hat{\Gamma}_h$) and cut faces ($\mathcal{E}_h^{c;\circ}$) are shown in Figs. 2b, 3d, 3e, 3f respectively. For all tests, the computational grids fit the outer boundary, whereas at the inner boundary, where the WSBM method is used, we enforce the Dirichlet boundary conditions. All calculations were performed based on the MFEM finite element library [47].

Remark 7. In all mesh refinement studies in this section, we do not apply Assumptions 3.14 or 4.8 to the definition of the distance $\boldsymbol{d}$ (for the Poisson and Stokes operators, respectively). Specifically the grids are refined by simply splitting every edge into two sub-edges at each stage of the mesh refinement procedure. While instrumental for the proofs of stability and convergence, Assumptions 3.14 or 4.8 are just sufficient conditions, which may be too restrictive in practical engineering applications. We prefer to forfeit them in the numerical tests, to show the overall robustness of the proposed methods under more general conditions.

5.1. Poisson problem

We study the convergence of the WSBM weak formulation (3.13a) of the Poisson problem for the geometries depicted in Figs. 2a, 3a, 3b, and 3c using the following manufactured solution:

$$u(x, y) = \sin(10\pi x)\cos(10\pi y)\,, \tag{5.1}$$

from which the corresponding forcing f in (3.1) is deduced. We consider the Nitsche penalty parameter $\kappa_1 = 2\,C_I$ and a ghost penalty coefficient $\kappa_2 = 1$. In Fig. 4a and b, we report the convergence histories of the error measured in the L^2-norm (left) and the H^1 semi-norm (right). The L^2-norm and H^1-semi-norm errors decay with optimal rates. In particular, the L^2-norm converges at a rate higher than the theoretical estimate of $3/2$, given in Theorem 3. Also note that all results are essentially insensitive to rotation.

For completeness, we run a comparison test between the standard SBM and the WSBM. As already mentioned in the Introduction, the main motivation for the WSBM is moving boundary problems and we do not expect a significant difference between its results and the ones of the standard SBM in the case of static boundaries. Using the geometric setup depicted in Fig. 2a (i.e., a square domain with a circular hole) and the same manufactured solution described in (5.1), we compare in Fig. 5 the L^2-errors of WSBM and SBM. We also considered two different values of the ghost penalty ($\kappa_2 = 1$ and $\kappa_2 = 0$). Minimal differences are observed between the WSBM and the SBM errors, which both converge optimally.

5.2. Stokes problem

We study the convergence of the WSBM weak formulation (4.7) for the Stokes problem, again on the geometries shown in Figs. 2a, 3a, 3b, and 3c. We use the following manufactured solution:

$$\begin{cases} p(x, y) = \cos(2\pi x)\cos(2\pi y) - 1\,, \\ u_x(x, y) = 2\pi \sin(2\pi x)\sin(2\pi y)\,, \\ u_y(x, y) = 2\pi \cos(2\pi x)\cos(2\pi y)\,, \end{cases} \tag{5.2}$$

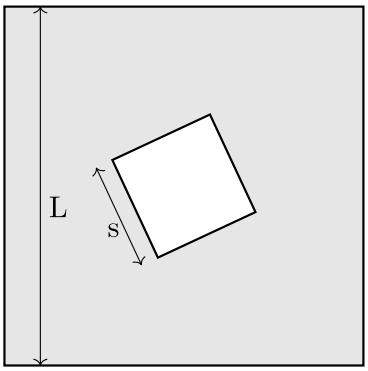

(a) The domain Ω (dark grey). Inner square rotated by 25°

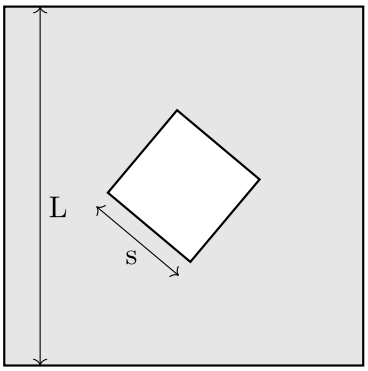

(b) The domain Ω (dark grey). Inner square rotated by 50°

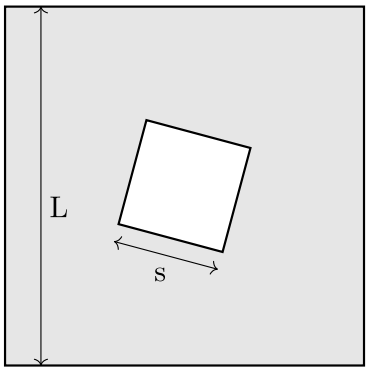

(c) The domain Ω (dark grey). Inner square rotated by 75°.

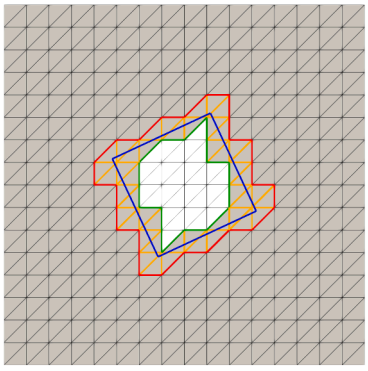

(d) $\tilde{\Omega}_h$ (grey), Γ (blue), $\tilde{\Gamma}_h$ (red), $\hat{\Gamma}_h$ (green) and $\mathcal{E}_h^{c;\circ}$ (orange) corresponding to immersed inner square of Figure 3a.

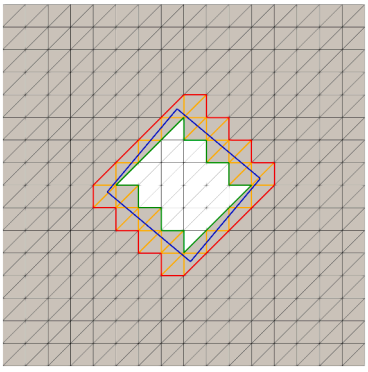

(e) $\tilde{\Omega}_h$ (grey), Γ (blue), $\tilde{\Gamma}_h$ (red), $\hat{\Gamma}_h$ (green) and $\mathcal{E}_h^{c;\circ}$ (orange) corresponding to immersed inner square of Figure 3b.

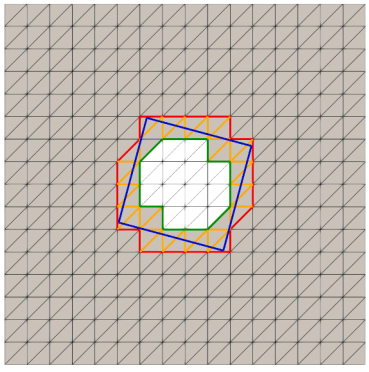

(f) $\tilde{\Omega}_h$ (grey), Γ (blue), $\tilde{\Gamma}_h$ (red), $\hat{\Gamma}_h$ (green) and $\mathcal{E}_h^{c;\circ}$ (orange) corresponding to immersed inner square of Figure 3c.

Fig. 3. A square domain with a square hole centered at $(0.5, 0.5)$ with $L = 1$ and $s = 0.3$. The inner square boundary is rotated at 25° (plot (a)), 50° (plot (b)), and 75° (plot (c)), with corresponding surrogate domains and boundaries (plots (d), (e), (f), resp.).

from which the corresponding forcing $\boldsymbol{f}$ in (4.1a) is deduced. In all the aforementioned geometries, traction conditions are applied on the left and right faces of the square whereby $\boldsymbol{t}_N$ are deduced accordingly from (5.2). A Dirichlet condition on the velocity is imposed instead on the top and bottom faces of the square domain. We consider the Nitsche penalty parameter $\kappa_1 = 2\,C_I$, ghost penalty coefficients $\kappa_2 = \kappa_3 = 1$ and the consistent pressure stabilization coefficient $\delta = 1$. As in the case of the Poisson problem, the WSBM results shown in Fig. 6 indicate the same optimal convergence rates in all norms as for the unweighted SBM formulation (see [1,35]), as well as robustness with respect to geometry variations.

6. Summary

We have provided an enhanced analysis of well-posedness and accuracy for the WSBM in the case of the Poisson and Stokes operators. The key improvement with respect to [40] is the choice of γ-weighting for the terms integrated on the interior edges (2D) or faces (3D) of the elements in $\hat{\Omega}_h$ cut by the physical boundary. This is crucial to ensure stability. In addition, we have shown optimal convergence of the WSBM in the natural norm for both Poisson and Stokes boundary-value problems. Finally, we established an enhanced L^2-error estimate using a duality argument, under the conventional assumption of smoothness or convexity of the true domain Ω. These aspects are important in advancing the understanding and development of the WSBM, in that they increase the flexibility and simplicity of the method, particularly when the geometry of the boundaries is highly complex.

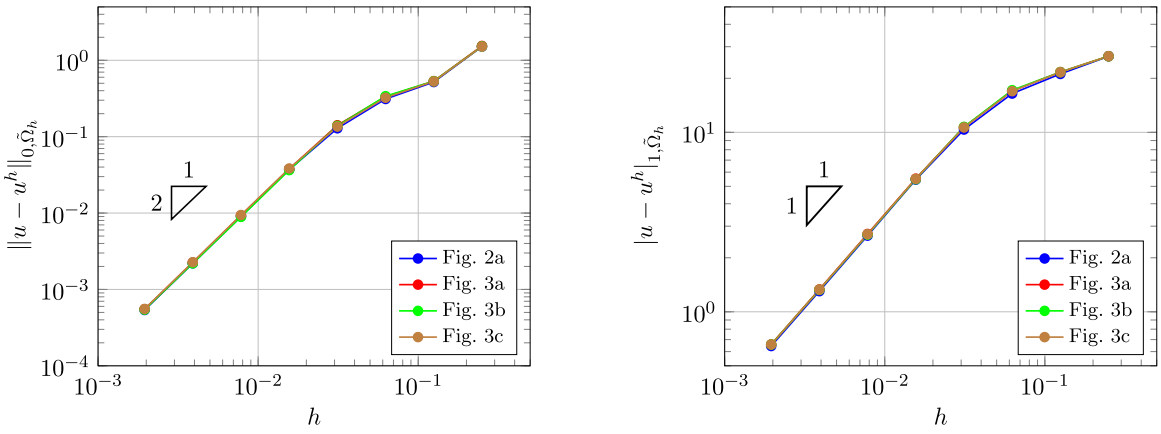

(a) L^2-norm of the error. (b) H^1-seminorm of the error.

Fig. 4. Poisson problem: Convergence of the L^2-norm and the H^1-seminorm of the error, for the domain geometries shown in Figs. 2a, 3a, 3b, and 3c.

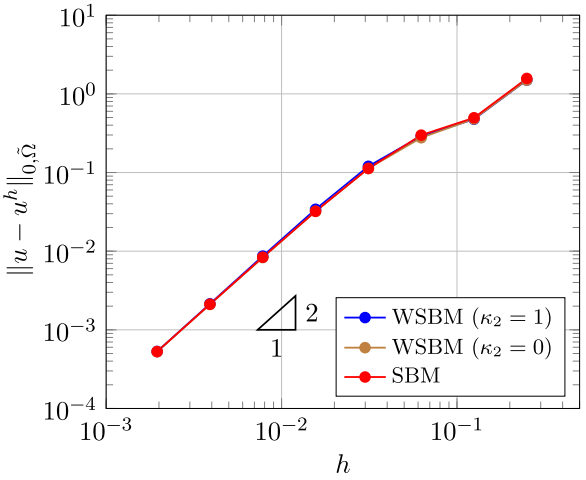

Fig. 5. Poisson problem on the geometric setup of Fig. 2a. Comparison of the convergence rates of the L^2-error of the WSBM (with ghost penalty parameter $\kappa_2 = 1$ and $\kappa_2 = 0$) against the standard SBM.

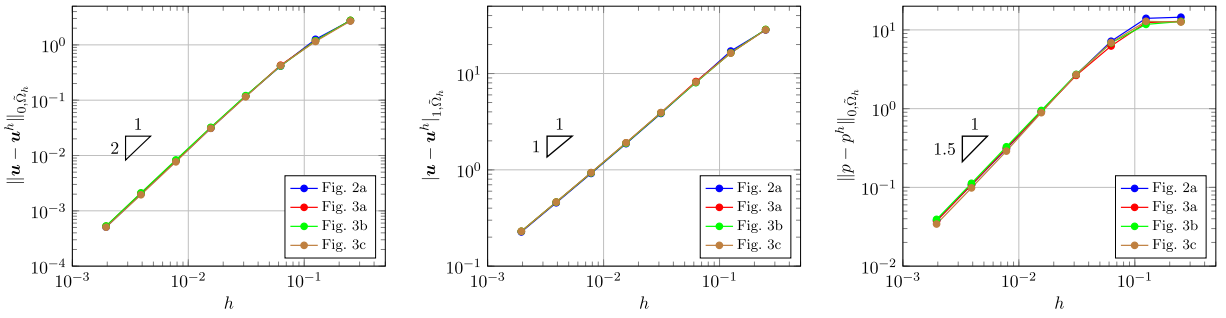

(a) L^2-norm of the velocity error. (b) H^1-seminorm of the velocity error. (c) L^2-norm of the pressure error.

Fig. 6. Stokes flow problem: Convergence of the L^2-norm and H^1-seminorm of the velocity error, and of the L^2-norm of the pressure error, for the domain geometries shown in Figs. 2a, 3a, 3b, and 3c.

Data availability

No data was used for the research described in the article.

Acknowledgment

Nabil M. Atallah performed this work under the auspices of the U.S. Department of Energy by Lawrence Livermore National Laboratory under Contract DE-AC52-07NA27344, LLNL-JRNL-854674. Guglielmo Scovazzi has been supported by the National Science Foundation, Division of Mathematical Sciences (DMS), under Grant 2409919. Claudio Canuto is a member of the Italian INdAM-GNCS research group.

References

[1] N.M. Atallah, C. Canuto, G. Scovazzi, The second-generation shifted boundary method and its numerical analysis, Comput. Methods Appl. Mech. Eng. 372 (2020) 113341.
[2] D. Boffi, L. Gastaldi, A finite element approach for the immersed boundary method, Computers & structures 81 (8) (2003) 491–501.
[3] E. Burman, Ghost penalty, C.R. Math. 348 (21–22) (2010) 1217–1220.
[4] A. Hansbo, P. Hansbo, An unfitted finite element method, based on Nitsche's method, for elliptic interface problems, Comput. Methods Appl. Mech. Eng. 191 (47) (2002) 5537–5552.
[5] K. Höllig, U. Reif, J. Wipper, Weighted extended B-spline approximation of Dirichlet problems, SIAM J. Numer. Anal. 39 (2) (2001) 442–462.
[6] T. Rüberg, F. Cirak, Subdivision-stabilised immersed B-spline finite elements for moving boundary flows, Comput. Methods Appl. Mech. Eng. 209 (2012) 266–283.
[7] T. Rüberg, F. Cirak, A fixed-grid B-spline finite element technique for fluid–structure interaction, Int. J. Numer. Methods Fluids 74 (9) (2014) 623–660.
[8] B. Schott, U. Rasthofer, V. Gravemeier, W.A. Wall, A face-oriented stabilized Nitsche-type extended variational multiscale method for incompressible two-phase flow, Int. J. Numer. Methods Eng. 104 (7) (2015) 721–748.
[9] E. Burman, P. Hansbo, M. Larson, A cut finite element method with boundary value correction, Math. Comput. 87 (310) (2018) 633–657.
[10] E. Burman, P. Hansbo, M.G. Larson, Dirichlet Boundary Value Correction using Lagrange Multipliers, (2019). arXiv:1903.07104
[11] E. Burman, P. Hansbo, M.G. Larson, A cut finite element method with boundary value correction for the incompressible stokes equations, in: European Conference on Numerical Mathematics and Advanced Applications, Springer, 2017, pp. 183–192.
[12] E. Burman, P. Hansbo, Fictitious domain finite element methods using cut elements: I. A stabilized Lagrange multiplier method, Comput. Methods Appl. Mech. Eng. 199 (41–44) (2010) 2680–2686.
[13] E. Burman, P. Hansbo, Fictitious domain finite element methods using cut elements: II. a stabilized Nitsche method, Appl. Numer. Math. 62 (4) (2012) 328–341.
[14] E. Burman, M.A. Fernández, An unfitted Nitsche method for incompressible fluid–structure interaction using overlapping meshes, Comput. Methods Appl. Mech. Eng. 279 (2014) 497–514.
[15] E. Burman, D. Elfverson, P. Hansbo, M.G. Larson, K. Larsson, Shape optimization using the cut finite element method, Comput Methods Appl Mech Eng 328 (2018) 242–261.
[16] A. Massing, M. Larson, A. Logg, M. Rognes, A Nitsche-based cut finite element method for a fluid-structure interaction problem, Comm. App. Math Comp. Sci. 10 (2) (2015) 97–120.
[17] E. Burman, S. Claus, P. Hansbo, M.G. Larson, A. Massing, CutFEM: Discretizing geometry and partial differential equations, Int. J. Numer. Methods Eng. 104 (7) (2015) 472–501.
[18] D. Kamensky, M.-C. Hsu, Y. Yu, J.A. Evans, M.S. Sacks, T.J.R. Hughes, Immersogeometric cardiovascular fluid–structure interaction analysis with divergence-conforming B-splines, Comput. Methods Appl. Mech. Eng. 314 (2017) 408–472.
[19] F. Xu, D. Schillinger, D. Kamensky, V. Varduhn, C. Wang, M.-C. Hsu, The tetrahedral finite cell method for fluids: immersogeometric analysis of turbulent flow around complex geometries, Comput. Fluids 141 (2016) 135–154.
[20] A. Lozinski, A new fictitious domain method: optimal convergence without cut elements, C.R. Math. 354 (7) (2016) 741–746.
[21] J. Parvizian, A. Düster, E. Rank, Finite cell method, Comput. Mech. 41 (1) (2007) 121–133.
[22] A. Düster, J. Parvizian, Z. Yang, E. Rank, The finite cell method for three-dimensional problems of solid mechanics, Comput. Methods Appl. Mech. Eng. 197 (45) (2008) 3768–3782.
[23] J.H. Bramble, T. Dupont, V. Thomée, Projection methods for Dirichlet's problem in approximating polygonal domains with boundary-value corrections, Math. Comput. 26 (120) (1972) 869–879.
[24] J.H. Bramble, J.T. King, A finite element method for interface problems in domains with smooth boundaries and interfaces, Adv. Comput. Math. 6 (1) (1996) 109–138.
[25] J.H. Bramble, J.T. King, A robust finite element method for nonhomogeneous Dirichlet problems in domains with curved boundaries, Math. Comput. 63 (207) (1994) 1–17.
[26] B. Cockburn, M. Solano, Solving Dirichlet boundary-value problems on curved domains by extensions from subdomains, SIAM J. Sci. Comput. 34 (1) (2012) A497–A519.
[27] B. Cockburn, W. Qiu, M. Solano, A priori error analysis for HDG methods using extensions from subdomains to achieve boundary conformity, Math. Comput. 83 (286) (2014) 665–699.
[28] B. Cockburn, D. Gupta, F. Reitich, Boundary-conforming discontinuous Galerkin methods via extensions from subdomains, J. Sci. Comput. 42 (1) (2010) 144.
[29] S. Bertoluzza, M. Ismail, B. Maury, The fat boundary method: semi-discrete scheme and some numerical experiments, in: Domain Decomposition Methods in Science and Engineering, Springer, 2005, pp. 513–520.
[30] S. Bertoluzza, M. Ismail, B. Maury, Analysis of the fully discrete fat boundary method, Numerische Mathematik 118 (1) (2011) 49–77.
[31] R. Glowinski, T.-W. Pan, J. Periaux, A fictitious domain method for Dirichlet problem and applications, Comput. Methods Appl. Mech. Eng. 111 (3–4) (1994) 283–303.
[32] A. Main, G. Scovazzi, The shifted boundary method for embedded domain computations. Part I: poisson and stokes problems, J. Comput. Phys. 372 (2018) 972–995.
[33] A. Main, G. Scovazzi, The shifted boundary method for embedded domain computations. Part II: linear advection–diffusion and incompressible Navier–Stokes equations, J. Comput. Phys. 372 (2018) 996–1026.
[34] T. Song, A. Main, G. Scovazzi, M. Ricchiuto, The shifted boundary method for hyperbolic systems: embedded domain computations of linear waves and shallow water flows, J. Comput. Phys. 369 (2018) 45–79.
[35] N.M. Atallah, C. Canuto, G. Scovazzi, Analysis of the shifted boundary method for the stokes problem, Comput. Methods Appl. Mech. Eng. 358 (2020) 112609.
[36] N.M. Atallah, C. Canuto, G. Scovazzi, Analysis of the shifted boundary method for the poisson problem in general domains, Math. Comput. 90 (2021) 2041–2069.
[37] N.M. Atallah, C. Canuto, G. Scovazzi, The high-order shifted boundary method and its analysis, Comput. Methods Appl. Mech. Eng, 394 (2022) 114885.
[38] J.H. Collins, A. Lozinski, G. Scovazzi, A penalty-free shifted boundary method of arbitrary order, Comput. Methods Appl. Mech. Eng. (2023) 116301.
[39] D. Xu, O. Colomés, A. Main, K. Li, N.M. Atallah, N. Abboud, G. Scovazzi, A weighted shifted boundary method for immersed moving boundary simulations of stokes' flow, J. Comput. Phys. 510 (2024) 113095.
[40] O. Colomés, A. Main, L. Nouveau, G. Scovazzi, A weighted shifted boundary method for free surface flow problems, J. Comput. Phys. 424 (2021) 109837.

[41] K. Wang, J. Grétarsson, A. Main, C. Farhat, Computational algorithms for tracking dynamic fluid–structure interfaces in embedded boundary methods, Int. J. Numer. Methods Fluids 70 (4) (2012) 515–535.
[42] R.A. Adams, J.J.F. Fournier, Sobolev spaces, 140 of *Pure and Applied Mathematics (Amsterdam)*, Elsevier/Academic Press, Amsterdam, second edition, 2003.
[43] S.C. Brenner, L.R. Scott, The mathematical theory of finite element methods, 15 of *Texts in Applied Mathematics*, Springer, New York, third edition, 2008. https://doi.org/10.1007/978-0-387-75934-0
[44] A. Bonito, C. Canuto, R.H. Nochetto, A. Veeser, Adaptive finite element method, Acta Numer. 33 (2024) 1–322. https://doi.org/10.1017/S0962492922000095
[45] T.J.R. Hughes, L.P. Franca, A new finite element formulation for computational fluid dynamics: VII. the stokes problem with various well-posed boundary conditions: symmetric formulations that converge for all velocity/pressure spaces, Comput. Methods Appl. Mech. Eng. 65 (1) (1987) 85–96.
[46] T. Kato, M. Mitrea, G. Ponce, M. Taylor, Extension and representation of divergence-free vector fields on bounded domains, Math. Res. Lett. 7 (5–6) (2000) 643–650. https://doi.org/10.4310/MRL.2000.v7.n5.a10
[47] R. Anderson, J. Andrej, A. Barker, J. Bramwell, J.-S. Camier, J. Cerveny, V. Dobrev, Y. Dudouit, A. Fisher, T. Kolev, W. Pazner, M. Stowell, V. Tomov, I. Akkerman, J. Dahm, D. Medina, S. Zampini, MFEM: A modular finite element methods library, Comput. Math. Appl. 81 (2021) 42–74. https://doi.org/10.1016/j.camwa.2020.06.009