POLITECNICO DI TORINO
Repository ISTITUZIONALE

Development of a Longitudinal Slippage Detection Method for a Pseudo-omnidirectional UGV for Precision Agriculture

Original
Development of a Longitudinal Slippage Detection Method for a Pseudo-omnidirectional UGV for Precision Agriculture / Amodio, F., Danzi, D., Botta, A., Quaglia, G.. - ELETTRONICO. - 9:(2026), pp. 30-37. (The 9th Jc-IFToMM International Symposium (in conjunction with The 32nd Jc-IFToMM Symposium on Theory of Machines and Mechanisms) Tokyo (JP) June 11, 2026 - June 12, 2026) [10.57272/jciftomm.9.0_30].

Availability:
This version is available at: 11583/3016612 since: 2026-10-13T09:09:49Z

Publisher:
Japanese Council of IFToMM

Published
DOI:10.57272/jciftomm.9.0_30

Terms of use:

This article is made available under terms and conditions as specified in the corresponding bibliographic description in the repository

Publisher copyright

(Article begins on next page)

27 October 2026

Proceedings of the 9th Jc-IFToMM International Symposium (2026)
The 32nd Jc-IFToMM Symposium on Theory of Machines and Mechanisms
11-12 June 2026

Development of a Longitudinal Slippage Detection Method for a Pseudo-omnidirectional UGV for Precision Agriculture

Francesco Amodio, Davide Danzi, Andrea Botta, Giuseppe Quaglia
Department of Mechanical and Aerospace Engineering, Politecnico di Torino, Italy,
{francesco.amodio; andrea.botta; giuseppe.quaglia}@polito.it
{davide.danzi}@studenti.polito.it

Abstract
This paper discusses the development of a pseudo-omnidirectional Unmanned Ground Vehicle for Precision Agriculture applications. The UGV hardware development is discussed in terms of design requirements and executive design, with peculiar attention to the swerve-drive unit and the variable track mechanism. The discussion then focuses on the introduction of an Extended Kalman Filter for high precision longitudinal slippage estimation, for future implementation within the UGV traction control.

Keywords: Precision Agriculture, Service Robotics, UGV, Slippage-Detection

1. Introduction

Precision Agriculture (PA) is an emerging approach that aims at optimizing agricultural production through the use of advanced technologies and data-driven methods [1]. In this context, Unmanned Ground Vehicles (UGVs) represent a promising solution to support human labor in farming environments, especially for repetitive and time-demanding tasks such as crop monitoring, mapping, sampling, and targeted interventions . By operating directly within the field, robotic platforms can collect information about crop conditions and support farmers in monitoring and physical processes [2], [3].

Within this research scenario, the AgriMaRo.Q (AGRIcultural MAte RObot) platform, shown in Figure 1, has been developed as a pseudo-omnidirectional three-wheeled UGV tailored for PA applications [4], [5]. The robot features three swerve-drive locomotion units that enable high mobility in semi-structured agricultural environments, together with a a reconfigurable track width gantry structure that allows the platform to work over crops and adapt its footprint to different crop layouts and field conditions. These characteristics make the platform suitable for operation in environments such as greenhouses or relatively small cultivated areas, where maneuverability and adaptability are essential. Indeed, even in these narrow environments the robot can nimbly operate on one or more rows of crops thanks to its gantry structure and track widening mechanism.
This paper presents the current development stage of the AgriMaRo.Q platform, focusing on the prototype implementation and on the hardware and electronic architecture of the robot. In addition to the platform description, the robot is employed as a testbed for the estimation of wheel longitudinal slippage for further implementation within the UGV traction control. To this end, an

(c) 2026 The Authors. This is an open access article under the terms of the Creative Commons Attribution License. (https://creativecommons.org/licenses/by/4.0/)

Extended Kalman Filter (EKF) framework is introduced to estimate the interaction between the robot and the terrain using both proprioceptive and exteroceptive sensing sources. The remainder of this paper is organized as follows. The next section presents the recent hardware development and prototype implementation of the AgriMaRo.Q platform. The final section introduces the EKF-based algorithm for slip detection and discusses its potential role in the future development of UGV traction strategies.

2. Hardware Development

Figure 1 (a) shows the functional drawing of the AgriMaRo.Q robot. Locomotion is provided through three custom-made swerve-drive wheels that make the platform pseudo-omnidirectional, i.e. it can show any planar twist once the three wheels are steered consistently with the desired twist [4]. The design of the custom-made locomotion unit also integrates a non-contact slip ring, that prevents from steering angle physical limits. Shape reconfiguration is enabled by a linear guide mechanism, namely a Scott-Russel mechanism, which is attached to one wheel of the robot. As shown in Figures

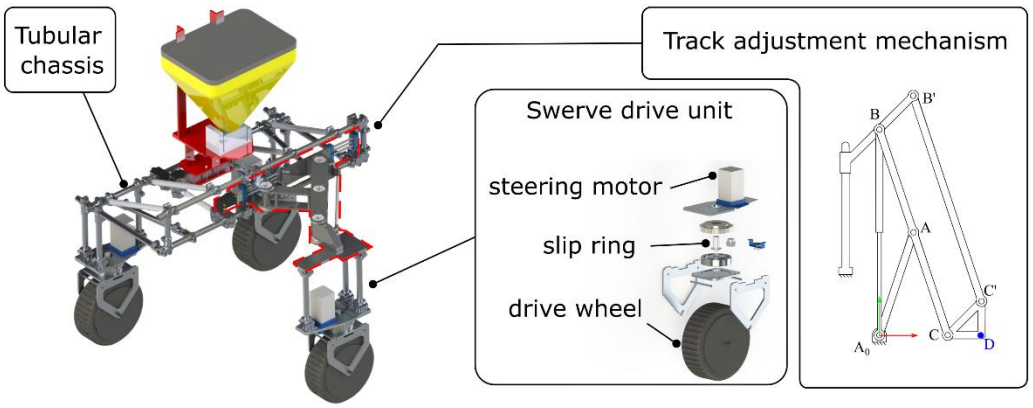

(a)

(b)

(c)

Figure 1 (a) AGRIMARO.Q drawing with main components highlighted. **(b)** Prototype made and pictured in its compact configuration (minimum track width). **(c)** Prototype in extended configuration.

1 (b-c), this UGV architecture results in an isosceles triangular footprint defined by the three wheels, whose dimensions can be varied by modifying the triangle height. This feature is particularly valuable for horticultural applications, where row widths can vary due to the variety of crops grown, making it necessary to change the UGV's track width.

As a result, examples of AgriMaRo.Q locomotion strategies are shown in Figure 2. Pseudo omnidirectionality is exploited when moving between two different rows to allow for easy repositioning even in confined spaces, for example by means of pure horizontal translation (b) or by rotation, by making the centre of rotation coincident with one of the three wheels (c). The minimum inter-row distance is defined by half the UGV pitch, in a locomotion strategy in which two drive wheels are positioned ahead of the chassis along the direction of motion (delta configuration). If Scott Russell's mechanism is used to vary the UGV's shape to adapt to different rows (d-g), the track can be adjusted in between the values $t \in [t_{min}, t_{max}]$ (f).

2.1 Electronics

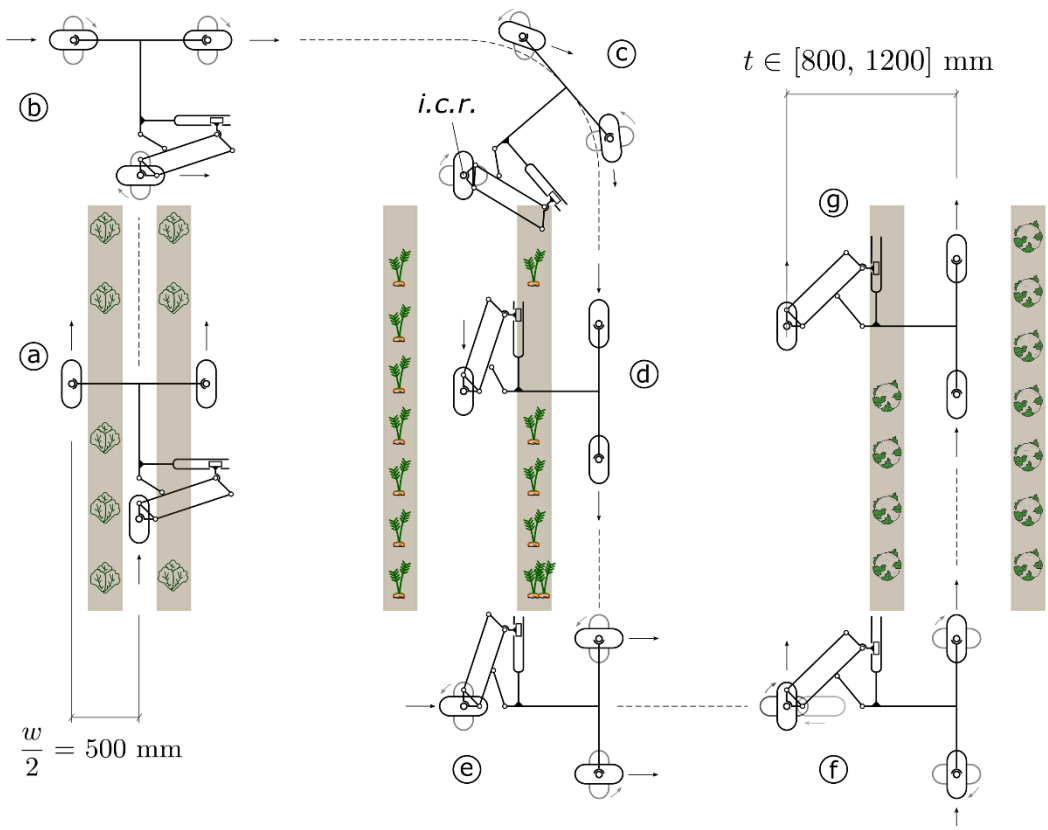

Figure 2 Representation of possible locomotion strategies of the AGRIMARO.Q UGV while navigating crop rows with variable spacing. **(a)** Forward motion in delta configuration, **(b)** wheel steering for transversal motion, **(c)** chassis rotation with one wheel as center of rotation, **(d)** forward motion in triangular configuration, **(e)** transversal motion, **(f)** wheel steering and track adjustment for a bigger crop spacing, **(g)** forward motion.

Figure 3 shows the schematic diagram of the control system, including the low-level control architecture, which manages the platform's motion, and the high-level control system for terrain recognition and traction control.

The low-level control is based on a Teensy 4.1 microcontroller board by PJRC. It receives a velocity twist command via SBUS protocol from a user-managed radio controller and computes the platform's inverse kinematics to define the reference values for the actuators (steering angle, wheel angular velocity, and linear guide position). The microcontroller subsequently performs a closed-loop control using feedback respectively from the steering encoders, the wheel Hall sensors, and limit switches for linear guide homing.

The high-level control system processes instead additional measured and estimated data, in real time via a compact PC Intel NUC with 16 GB RAM and 512 GB SSD, running Ubuntu 21 and the Robot Operating System (ROS2). Specifically, a terrain recognition module employs proprioceptive and exteroceptive data, representing the robot's internal state and the surrounding environment, respectively. The proprioceptive suite includes an Adafruit BNO055 9-axis IMU, which provides linear and angular acceleration as well as the platform's orientation relative to an initial reference frame, and four voltage-current sensors monitoring each wheel and the overall system. The exteroceptive sensors consist of two VL53LCX Time-of-Flight (ToF) sensors, mounted behind each wheel in the direction of travel to measure terrain sinkage, and an Intel RealSense D435i camera, which integrates an internal IMU and depth sensing capabilities.

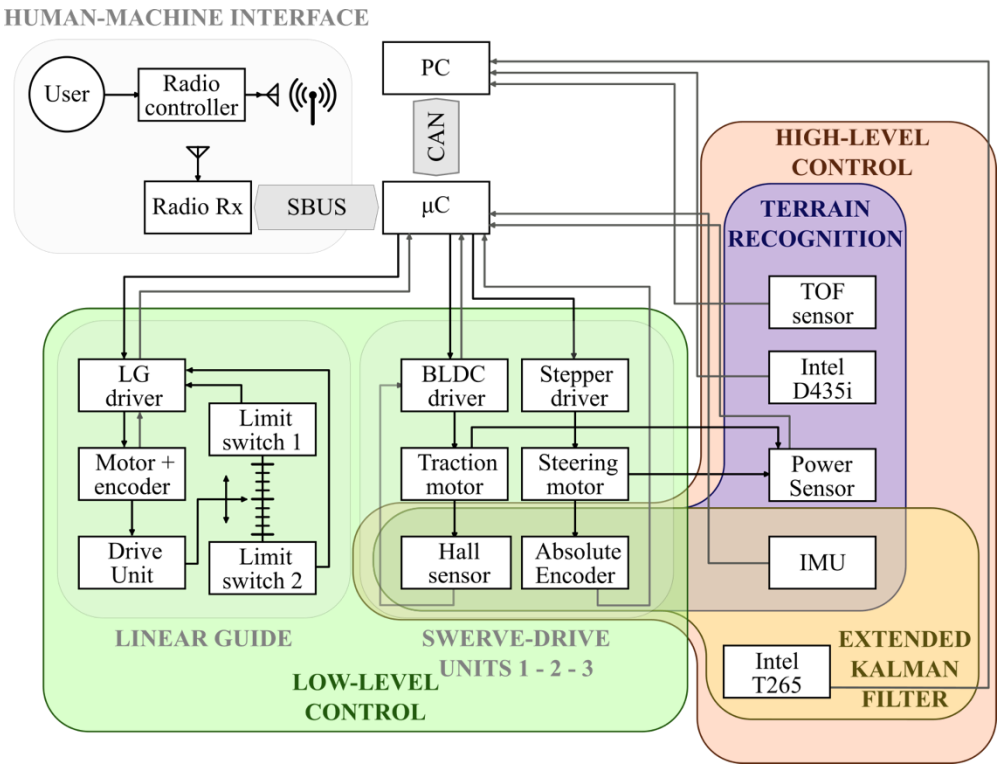

Figure 3 Schematic representation of the electronic control system including low and high-level control.

This setup serves as the primary foundation for the development of a slip-based traction control system. To this aim, the traction control would be devoted to define an optimal slip ratio according to the estimated terrain type and attempts to maintain it via a PID regulator. Since velocity estimation derived from the aforementioned sensors were insufficiently accurate for reliable slip calculation, i.e. the only sensors capable of providing robot velocity were the accelerometers which require numerical integration and are therefore prone to significant drift, an Intel RealSense T265 tracking camera was also integrated to the UGV sensing system. Its output, fused with other sensor data through an Extended Kalman Filter (EKF), ensures precise state estimation.

3. Slippage detection algorithm

An Extended Kalman Filter was implemented to obtain robust estimates of the UGV state variables, whose dynamics are highly variable and affected by sensor noise and measurement errors. The choice of this filter, rather than a standard Kalman Filter, is motivated by the strong non-linearities in the kinematics and dynamics of a pseudo-omnidirectional robot such as AgriMaRo.Q. The EKF allows local linearization of the nonlinear system by using Jacobian matrices of the state and measurement models [6].

Figure 4 shows the schematic diagram of the EKF that operates through a recursive cycle consisting of two main phases: prediction and correction, with the objective of obtaining a sub-optimal state through the use of the Kalman gain. The prediction phase uses mathematical functions called state-space models that represent the dynamics of states, with the aim of estimating the next state from the one predicted in the previous interaction. The correction phase then uses the newly evaluated state to obtain theoretical measurements, thus allowing the extract an error with respect to the variables acquired by the sensors. Using the predicted state, the error and the Kalman gain, based on the covariances calculated by the Jacobians, the subsequent state is estimated.

The final estimate of the EKF, compared to that directly measured by the sensors, allows for the use of more reliable inputs for wheel longitudinal slippage evaluation. The Society of Automotive Engineers (SAE) defined the slippage both in traction and braking condition [7]:

$$s_{\mathrm{t}} = (\omega_i r_i - v_{ix}) \,/\, \omega_i r_i \tag{1}$$

$$s_{\mathrm{b}} = (v_{ix} - \omega_i r_i) \,/\, v_{ix} \tag{2}$$

where ω_i [rad/s] is the angular velocity of each individual wheel, r_i [m] represents the rolling radius (0.723 m in the specific case of AgriMaRo.Q) and v_{ix} [m/s] is the wheel longitudinal velocity. It's worth citing that, since the longitudinal velocity data of the EKF refer to the robot's reference system, it is necessary to perform transpositions in the centre of the wheel hub, with subsequent calculation of the purely longitudinal component of the wheel using the optimized steering angle.

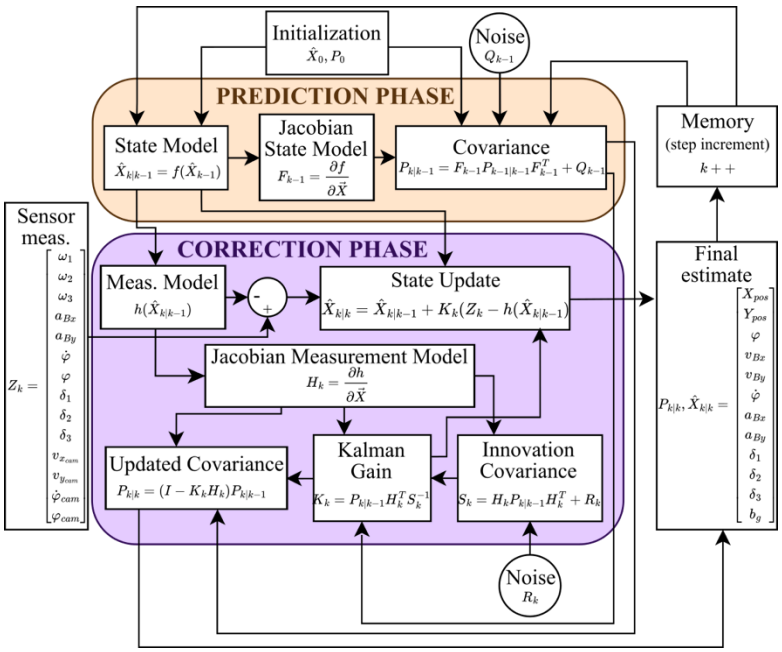

Figure 4 Schematic representation of the Extended Kalman Filter (EKF) developed for AgriMaRo.Q UGV.

3.1 EKF-based slippage estimation tests

Figure 5 shows the slip results obtained from a series of tests carried out on representative greenhouse terrains: tiles, grass, and firm soil with loose gravel. In particular, the test procedure consists of an initial acceleration phase of 1 second, until reaching a velocity of 1 m/s, which is then maintained as a steady-state velocity until the end of the acquisition.

The first plot displays the longitudinal wheel slip trend on a non-deformable surface such as tiles. Peak values of approximately 16% are observed during the acceleration phase, followed by values approaching pure rolling conditions. In contrast, the second and third plot show the longitudinal wheel slip trends on grass and dirt roads with loose gravel. These terrains exhibit significantly higher slip values, which are nevertheless representative of deformable ground conditions. Peaks of up to 39% are observed during the acceleration phases, followed by steady-state phases with slip values slightly above 10%.

These results are consistent with the theoretical behaviour expected for the analysed terrains. On tiles, representing a non-yielding surface, the low slip values derive form the predominant effect of adhesion and elastic deformation at the wheel-ground interface. However, this behaviour changes on deformable terrains. In such conditions, the wheels must first sink into the soil to reach a layer capable of generating traction, dissipating part of its energy in soil deformation, which physically translates into a higher rotational motion relative to the forward velocity, and therefore higher

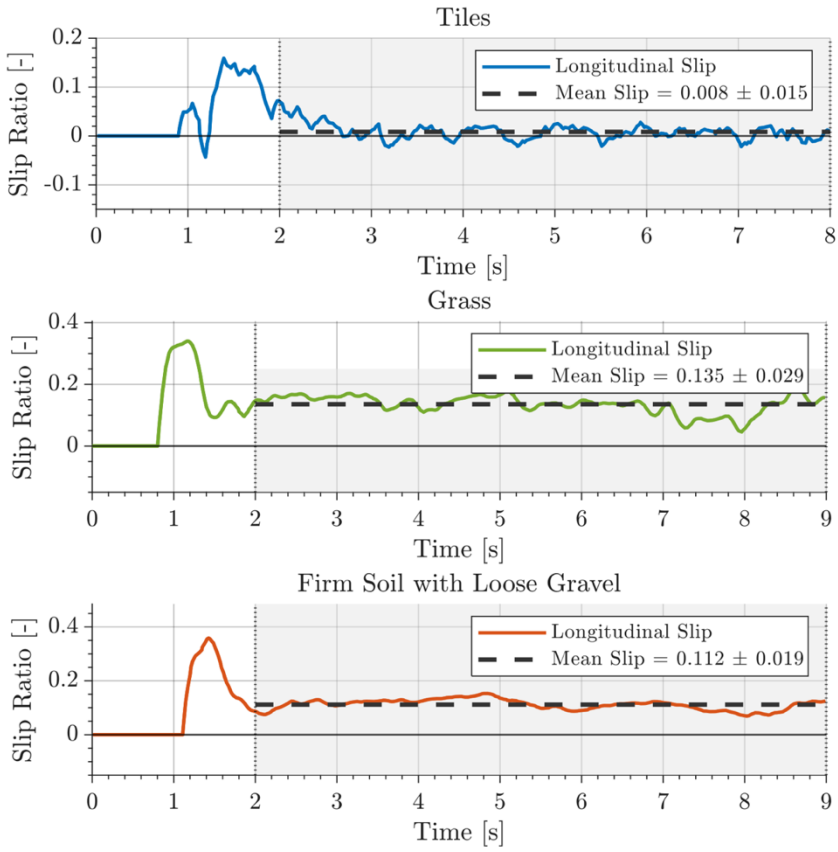

Figure 5 Real-Time Longitudinal Slip estimation on representative types of greenhouse terrains: Tiles, Grass, Firm Soil with Loose Gravel.

longitudinal slip values. Overall, the combination of the EKF and the real-time assessment of the longitudinal slip of each wheel, provides realistic and consistent results. Nevertheless, further studies need to be carried out to have more accurate results in transient phases, as these phases are particularly problematic for sensor accuracy despite the use of the EKF.

4. Conclusion

This paper presented the developments of a novel pseudo-omnidirectional UGV for horticulture and greenhouses. The robot features a triangular gantry structure provided by three swerve-drive custom wheels and track adjustment mechanism. The hardware development section described the current UGV prototype and related sensor suite. By leveraging the implemented exteroceptive and proprioceptive sensors, the preliminary development of a wheel slippage estimation of the pseudo-omnidirectional novel UGV has been discussed. Results showed that the method has promising potential to be further developed and implemented in a UGV high-level traction control algorithm.

Acknowledgement

This work was funded by the European Union NextGenerationEU under the research program "PNRR MUR Missione 4, Componente C2, Investimento 1.1 NextGenerationEU - PRIN 2022" Project title: FArmer robots: safe, sustainable and efficient precision agriculture in highly Challenging Environments (FACE) (Grant N. 2022EA5NT3, CUP D53C24004010006, D53C24004010006).

References

[1] A. Botta, P. Cavallone, L. Baglieri, G. Colucci, L. Tagliavini, and G. Quaglia, "A Review of Robots, Perception, and Tasks in Precision Agriculture," *Appl. Mech.*, vol. 3, no. 3, pp. 830–854, Jul. 2022, doi: 10.3390/applmech3030049.

[2] R. Pathak, R. Barzin, and G. C. Bora, "Data-driven precision agricultural applications using field sensors and Unmanned Aerial Vehicle," *Int. J. Precis. Agric. Aviat.*, vol. 1, no. 1, Art. no. 1, Dec. 2018, Accessed: Oct. 23, 2022. [Online]. Available: http://www.ijpaa.org/index.php/ijpaa/article/view/4

[3] H. Zhou, X. Wang, W. Au, H. Kang, and C. Chen, "Intelligent robots for fruit harvesting: recent developments and future challenges," *Precis. Agric.*, vol. 23, no. 5, pp. 1856–1907, Oct. 2022, doi: 10.1007/s11119-022-09913-3.

[4] G. Colucci, A. Botta, L. Tagliavini, L. Baglieri, S. Duretto, and G. Quaglia, "AGRIMARO.Q, A Service Robot for Precision Agriculture in Greenhouses," in *Advances in Italian Mechanism Science*, vol. 163, G. Quaglia, G. Boschetti, and G. Carbone, Eds., in Mechanisms and Machine Science, vol. 163. , Cham: Springer Nature Switzerland, 2024, pp. 292–299. doi: 10.1007/978-3-031-64553-2_34.

[5] G. Quaglia, G. Colucci, A. Botta, and L. Tagaliavini, "Development of a Novel Reconfigurable Omnidirectional Robot for Precision Agriculture in Greenhouses," in *Robotics and Mechatronics*, vol. 158, L. Romdhane, A. Mlika, S. Zeghloul, A. Chaker, and M. A. Laribi, Eds., in Mechanisms and Machine Science, vol. 158. , Cham: Springer Nature Switzerland, 2024, pp. 77–85. doi: 10.1007/978-3-031-59888-3_8.

[6] G. Welch and G. Bishop, "An Introduction to the Kalman Filter," Technical Report TR 95-041, University of North Carolina at Chapel Hill, 2006.

[7] Vehicle Dynamics Standards Committee, *Vehicle Dynamics Terminology*. doi: 10.4271/J670_202206.