POLITECNICO DI TORINO
Repository ISTITUZIONALE

Integrated Model-Based Systems Engineering methodology for design, analysis and simulation of an Environmental Control and Life Support System for an Analog Habitat

Original
Integrated Model-Based Systems Engineering methodology for design, analysis and simulation of an Environmental Control and Life Support System for an Analog Habitat / Luccisano, G., Giannini, L., Viola, N., Fusaro, R.. - ELETTRONICO. - 69:(2026), pp. 1505-1511. (CEAS – AIDAA Conference 2025 Torino (IT) 1-4 December 2025) [10.21741/9781644904251-264].

Availability:
This version is available at: 11583/3013673 since: 2026-07-28T16:25:31Z

Publisher:
Materials Research Forum LLC.

Published
DOI:10.21741/9781644904251-264

Terms of use:

This article is made available under terms and conditions as specified in the corresponding bibliographic description in the repository

Publisher copyright

(Article begins on next page)

26 November 2026

Materials Research Proceedings 69 (2026) 1505-1511 https://doi.org/10.21741/9781644904251-264

Integrated Model-Based Systems Engineering methodology for design, analysis and simulation of an Environmental Control and Life Support System for an Analog Habitat

Giacomo LUCCISANO[1,a *], Loris GIANNINI[1,b], Nicole VIOLA[2,c] and Roberta FUSARO[1,d]

[1]Department of Mechanical and Aerospace Engineering (DIMEAS), Politecnico di Torino, 10129, Turin, Italy

[2]Department of Management and Production Engineering (DIGEP), Politecnico di Torino, 10129, Turin, Italy

[a]giacomo.luccisano@polito.it, [b]loris.giannini@studenti.polito.it, [c]nicole.viola@polito.it, [d]roberta.fusaro@polito.it

Keywords: Analog Habitat, ARCADIA, Capella, Environmental Control and Life Support System, Human Spaceflight, Model-Based System Engineering

Abstract. In the context of human space exploration, the Environmental Control and Life Support System (ECLSS) plays an essential role in ensuring that space habitats provide and maintain life-sustaining conditions for astronauts. A long-duration human spaceflight mission necessitates the development of a highly reliable and sophisticated ECLSS, for which traditional Systems Engineering (SE) approaches, being primarily document-based, are likely to be inadequate in addressing the intrinsic complexity of developing such systems. To overcome these limitations, this work explores the applicability of Model-Based Systems Engineering (MBSE) models and tools, and discloses an integrated MBSE approach that establishes a link between the system model and analysis and simulation tools to support the iterative evaluation and refinement of the system model throughout the design process. To validate the proposed approach, the methodology is applied to the preliminary design of an ECLSS for an Analog Habitat. The results highlight several advantages, including early validation and verification of concepts, improved detection of design inconsistencies, rapid evaluation of design changes, and enhanced robustness, traceability, and efficiency of the design process.

Introduction

The Environmental Control and Life Support System (ECLSS) is a mission-critical element for human spaceflight: it supplies and regulates atmosphere, water, waste handling and, ultimately, habitability across spacecraft and surface habitats. Decades of research and flight experience have consolidated baseline functions and architectures for ECLSS and clarified their tight coupling with other onboard systems [1]. As exploration shifts from short sorties to longer campaigns, reliability, resource closure and integration constraints become the dominant drivers of systems and subsystems architecture definition and technology selection. Standards and agency practices (e.g., ECSS E-34 [2]) further frame the design space and verification needs.

Traditional Systems Engineering (SE) approach for ECLSS design has been predominantly document-centric: requirements, interfaces and verification artifacts are captured in dispersed specifications whose dependencies are difficult to maintain as complexity grows. The resulting friction (weak traceability, delayed defect discovery, and high maintenance overhead) is well documented in SE literature and practice [3]. Model-Based Systems Engineering (MBSE) addresses these limits by making a coherent model the authoritative source for requirements, design, analysis, verification and validation throughout the life cycle; this is reflected in the

Content from this work may be used under the terms of the Creative Commons Attribution 3.0 license. Any further distribution of this work must maintain attribution to the author(s) and the title of the work, journal citation and DOI. Published under license by Materials Research Forum LLC.

Materials Research Proceedings 69 (2026) 1505-1511 https://doi.org/10.21741/9781644904251-264

INCOSE definition and subsequent studies on MBSE value [4]. Moreover, economic/operational analyses indicate that earlier validation, automated consistency, and faster change propagation provide tangible benefits on complex programs.

This paper adopts the ARCADIA methodology implemented in Capella – a MBSE tool well diffused in both Industry and Academia [5] – to structure an ECLSS architecture and its engineering data, leveraging the method's viewpoints and traceability to manage requirements, functions, interfaces and physical architecture. Capella add-ons are used to parameterize the model and expose data to analysis/simulation. In the proposed approach, an analysis and a simulation paths are complementary to provide quantitative estimations at first and then to validate the concept's performance: (i) a quantitative analysis path computing Equivalent System Mass (ESM) [6] and reliability metrics [7] – standard figures for mass, power, volume, crew-time consolidation and risk assessment – based on NASA and common practice, and (ii) a dynamic simulation path via Virtual Habitat (V-HAB) [8] to capture closed-loop interactions and operational envelopes.

The scientific contribution of this work is threefold: (i) to formalize an MBSE workflow that binds ARCADIA/Capella models to external analysis and simulation artifacts through a parameterized bridge; (ii) to demonstrate on an Analog Habitat ECLSS how ESM/reliability analytics and dynamic simulations can be executed directly from the authoritative model to inform trades, check requirements, and iterate the architecture; and (iii) to discuss the impacts on verification & validation timing and configuration control relative to document-centric baselines (NASA SE handbook framing).

The paper is structured as follows: Section 2 outlines the integration approach and model parametrization; Section 3 applies it to the Analog Habitat use-case; Section 4 synthesizes benefits and limitations and identifies extensions to later design phases.

Proposed Integrated MBSE Approach for ECLSS Design

The proposed integrated MBSE approach, described in this paper, aims to support the development of an ECLSS architecture for an Analog Habitat application throughout the entire design process. Fig. 1 provides a comprehensive overview of the main steps that constitute the proposed framework.

The approach relies on the connection between the system model and analysis & simulation tools, enabling engineers to evaluate system performance and iteratively refine the model in an automated and traceable way. In the integration process detailed in this section, the system model is initially connected to engineering analysis tools, which are particularly relevant in the early ECLSS design phases.

The proposed framework consists of four main steps: (i) model definition and parametrization, (ii) automated data extraction and tools interoperability, (iii) simulation and analysis activities, and (iv) results evaluation and requirements validation. In the proposed approach, the system model is progressively defined throughout the process using the ARCADIA methodology [5], exploiting information on the system coming from the integrated analysis and simulation tools, in an iterative process. The integration method relies on the use of the Capella's add-on Property Values Management Tools (PVMT) [9], which enables the parametrization of the model. This allows designers to generate data that can be addressed to the elements of the model, enriching it with information that support the execution of relevant analyses and definition of the system architecture.

Materials Research Proceedings 69 (2026) 1505-1511 https://doi.org/10.21741/9781644904251-264

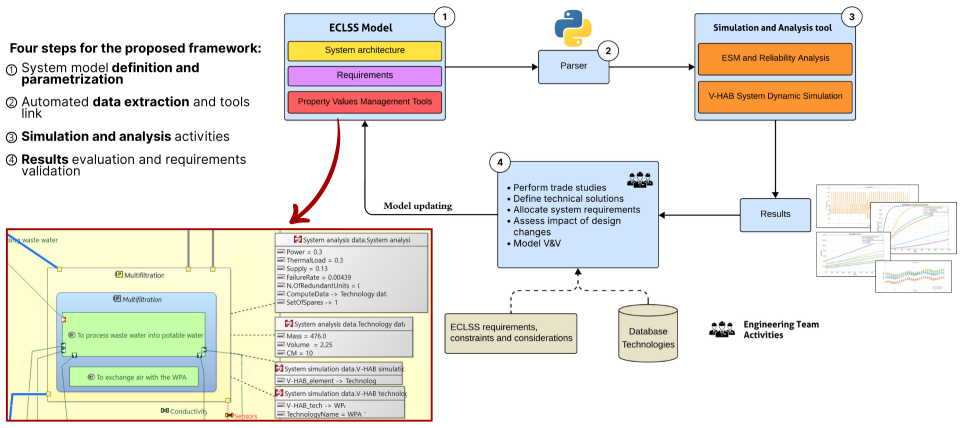

Fig. 1: Integrated MBSE approach.

The integration of the model with the analysis and simulation tools is achieved through a Python-based parser implemented in-house. This library enables the access to model elements and diagrams, as well as the extraction and manipulation of the parameters created through the PVMT. The system data that are extracted are then used to perform analyses or simulations, linking the extracted data with the appropriate external tools. This approach enables the automatic execution of system analysis and simulation, with the objective of obtaining insights into the system's characteristics and behavior. In this work, two different tools are integrated into the model to provide useful information about the system during the early design phases: an Equivalent System Mass (ESM) and reliability analysis tool, as well as the above-mentioned V-HAB simulator. The first tool, based on the parameters extracted from the model, computes two metrics that are fundamental for understanding the characteristics of an ECLSS: the system's ESM and the Probability of Loss of Crew *Pr(LOC)*.

The second tool that is integrated into the model is V-HAB, a simulation tool that simulates the dynamic behavior of an ECLSS for a specified mission scenario. In this work, a Python code is created to convert the system architectural and parametric models from Capella into the corresponding V-HAB ECLSS model. This approach enables the automatic generation of the V-HAB model and the execution of a simulation of the system for the specified mission. Each Python script that enables the extraction of system model information and the subsequent execution of analyses and simulations is imported into Capella using the *Python4Capella* add-on [9]. Once a system configuration is defined, designers can execute the scripts directly from the model, automatically obtaining the results for the system represented in Capella. Designers can exploit these results to perform trade studies, define technical solutions, verify requirements, assess the impact of design changes, and conduct continuous verification and validation of the model. Therefore, the proposed integrated approach supports the iterative evaluation and definition of the system model through the design process.

ECLSS Design for an Analog Habitat

To validate the proposed approach and obtain a more comprehensive understanding of its key advantages, the integrated approach is applied for the preliminary design of the ECLSS for an Analog Habitat. They provide a controlled, Earth-based proxy to test architectures, procedures, and human-system interactions under realistic operational constraints before flight, while offering cost and risk reduction, TRL maturation for ECLSS technologies, and high-fidelity study of human factors. An Analog Habitat campaign therefore constitutes an appropriate proving ground for an MBSE-driven ECLSS design loop: mission durations are shorter, safety can rely on terrestrial contingencies, and rapid iteration is feasible – yet the same drivers (closure vs. logistics, reliability vs. mass, ops complexity vs. robustness) still govern architecture quality [10].

Materials Research Proceedings 69 (2026) 1505-1511 https://doi.org/10.21741/9781644904251-264

The Analog Habitat is modeled with ARCADIA/Capella across its Operational, System, Logical, and Physical layers; mission objectives and requirements derive from stakeholder analysis and drive the ECLSS functions and interfaces used downstream. The Physical Architecture level (of which an example is shown in Fig. 2) serves as the authoritative source for technology choices and links (e.g., Atmosphere Control & Supply (ACS), Water Recovery & Management (WRM), Temperature & Humidity Control (THC) sub-systems), enriched with PVMT properties to capture masses, volumes, power, heat loads, consumables/expendables/spares, failure rates, redundancy/spares counts, set-points, and scenario data.

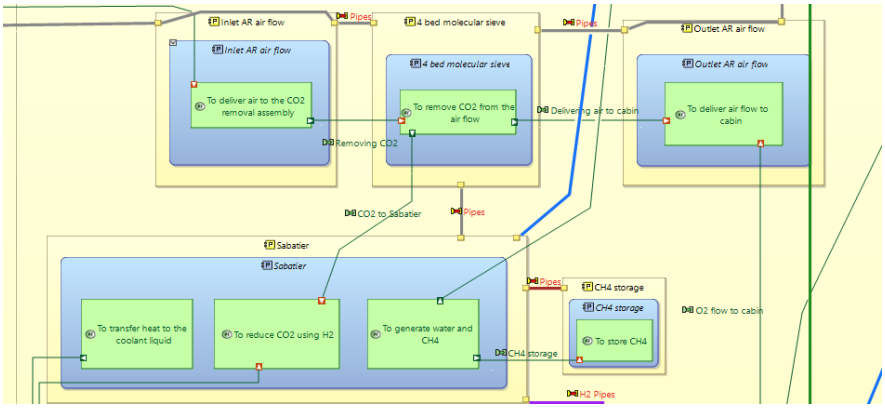

Fig. 2: Portion of the initial ECLSS architecture as represented in the PAB diagram.

A Python bridge (Python4Capella/capellambse) extracts components, links, PVMT properties (i.e., masses, flow-rates, power consumptions, simulation data, etc.), requirement links for the two tools: (i) an ESM & reliability calculator; (ii) a V-HAB model generator/runner. Execution inside Capella keeps analyses coherent with the checked-in model state.

The baseline ECLSS emphasizes the adoption of regenerative P/C technologies appropriate for long duration (eventhough in the analog they are assessed here over shorter analog missions). ESM aggregates mass, power, volume, heat rejection, and crew-time via mission-specific conversion factors per [6]; reliability uses constant-rate components with spares/redundancy treatment to estimate Probability of Loss of Crew *Pr(LOC)* [7].

The initial configuration (no spares/redundancy), results – as per Fig. 3 and Fig. 4 – show approximately linear ESM growth with duration (driven by time-dependent terms) and an unacceptably high Pr(LOC) even at ~10 days – highlighting the classic mass–reliability tension of recycling-heavy systems. The analyses show how storage-heavy architectures tend to be more reliable for short missions but incur higher ESM at longer durations; closing loops reduces ESM at longer durations but increases failure exposure unless mitigated by spares/redundancy.

Materials Research Proceedings 69 (2026) 1505-1511 https://doi.org/10.21741/9781644904251-264

The V-HAB generator creates a model equivalent to the Capella component-level model (at PA level): compartments, storages, technology instances, and controllers, with boundary conditions from PVMT (e.g., phasing, crew planners, initial inventories).

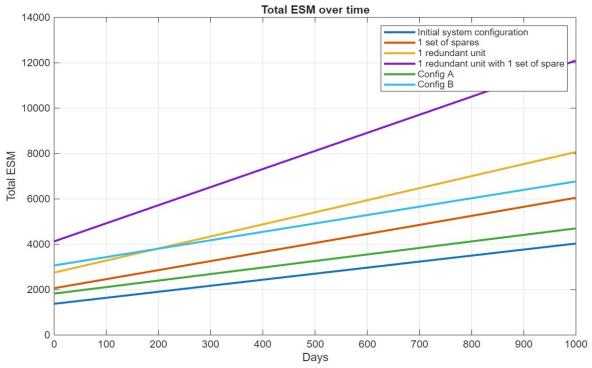

Fig. 3: Pr(LOC) over mission duration.

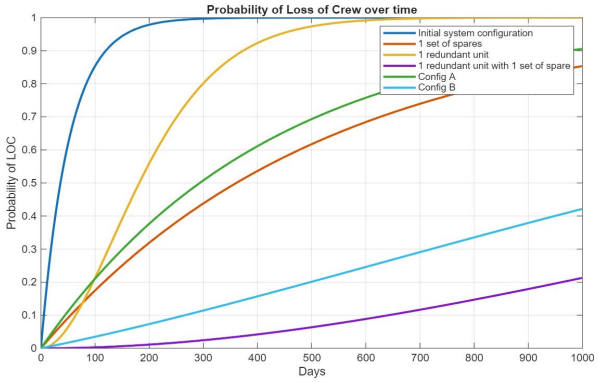

Fig. 4: ESM over mission duration.

The simulator runs closed-loop simulations (cabins, species, inventories, power) to verify requirement bounds and probe sensitivities/failure responses. Typical checks include: cabin pressure and major constituent partials recovery after disturbances; WRM throughput under crew metabolic loads; power/thermal margins; controller robustness under off-nominal inflows or component outages. Results – of which an example is shown in Fig. 5 and Fig. 6 – are fed back to requirement elements (Reviewed/WIP) to maintain traceable closure.

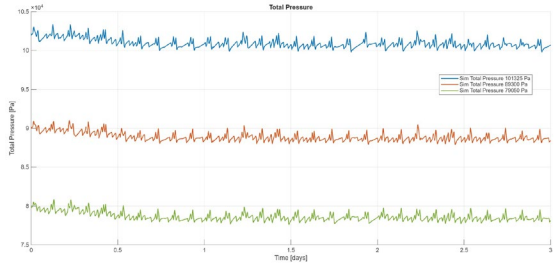

Fig. 5: Total cabin pressure over the mission duration for three different scenarios.

Materials Research Proceedings 69 (2026) 1505-1511 https://doi.org/10.21741/9781644904251-264

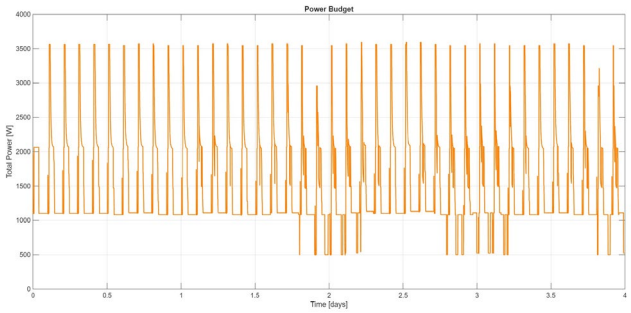

Fig. 6: ECLSS Power budget for a specified mission.

As illustrated in this section, this integrated MBSE approach establishes the model as the central source of truth for data across the entire design process, serving as a unified repository that guides requirement traceability, architecture development, analysis, and simulation throughout all phases of the ECLSS design.

Conclusion

The proposed integrated MBSE approach was developed to support the ECLSS design process. Its application to a real-world project enabled the identification of the key advantages of this approach, thereby overcoming the main limitations of the traditional methodology and leveraging the full potential of MBSE. This work demonstrated that any kind of analysis or simulation tool can be effectively integrated into a standard MBSE methodology. Indeed, a successful connection was established between Capella and an external simulation tool, as well as a custom-made analysis.

The characteristics of the proposed approach ensure consistency between the system model in Capella and the analysis and simulation tools. This guarantees that simulations and analyses are always consistent with the system model established in Capella, ensuring they consistently reflect the latest version of the model. The automatic execution of integrated tools from the model also contributes to a reduction in time and errors involved in creating the simulation each time it is required. In this integrated environment, once a system configuration has been established, analyses and simulations can be conducted rapidly, thereby providing insights into the system and enabling the rapid evaluation of the effects of design changes.

Moreover, this integrated approach facilitates the early detection and resolution of design issues by enabling verification and validation of the system from the initial stage of the design process. Furthermore, it facilitates the assessment of requirements since the initial design stages. Consequently, the proposed approach is expected to enhance the management of complexity in designing systems like the ECLSS, improving the overall robustness, traceability, and efficiency of the design process.

Future work will aim to integrate the system model with advanced engineering tools to assess the effectiveness of the approach in later design phases and further consolidate its applicability to other mission-critical systems.

Acknowledgements

G.L. work has been conducted within the Space It Up project funded by the Italian Space Agency (ASI) and the Italian Ministry of University and Research (MUR), under contract n. 2024-5-E.0 - CUP n. I53D24000060005.

References

[1] P. Eckart. Spaceflight life support and biospherics. Space technology library. Microcosm Press, Torrance, CA, US, 1996. ISBN 978-90-481-4659-8.

[2] ECSS-E-ST-34C – ECLS. 2018. Available online. url: ecss.nl/standard/ecss-e-st-34c-environmantal-control-and-life-support-ecls (accessed on 30 Oct 2025).

[3] P. O. Wieland. Designing for human presence in space: an introduction to environmental control and life support systems. NASA, Marshall Space Flight Center, Huntsville, AL, US, 1994.

[4] A. M. Madni and M. Sievers. Model-based systems engineering: Motivation, current status, and research opportunities. *Systems Engineering*, *21(3)*: 172–190, 2018. https://doi.org/10.1002/sys.21438

[5] Thales Group. Arcadia method overview, 2005. Available online. url: mbse-capella.org/arcadia.html (accessed on 01 Jul 2025).

[6] J. A. Levri, D. A. Vaccari and E. Alan. Theory and Application of the Equivalent System Mass Metric. *SAE Technical Paper Series, vol. 1*. 2000. https://doi.org/10.4271/2000-01-2395.

[7] H. Jones. Design and Analysis of a Flexible, Reliable Deep Space Life Support System. In *42nd International Conference on Environmental Systems*, 15-19 Jul 2012, San Diego, CA, US. 2012. https://doi.org/10.2514/6.2012-3418

[8] M. Czupalla, A. Zhukov, J. Schnaitmann, C. Olthoff, M. Deiml, P. Plotner, and U. Walter. The virtual habitat – a tool for dynamic life support system simulations. *Advances in Space Research, 55(11)*: 2683–2707, 2015. ISSN 0273-1177. https://doi.org/10.1016/j.asr.2014.12.029

[9] Eclipse Inc. Capella MBSE Add-On. 2025. Available online. url: https://mbse-capella.org/addons.html (accessed on 3 Nov 2025).

[10] C. Heinicke and M. Arnhof. A review of existing analog habitats and lessons for future lunar and Martian habitats. *REACH, vol. 21-22*: 100038. 2021. https://doi.org/10.1016/j.reach.2021.100038