POLITECNICO DI TORINO
Repository ISTITUZIONALE

Power Consumption Characterization of a 5G-Enabled Embedded Portable Device for Audio-based Networked Musical Interactions

Original
Power Consumption Characterization of a 5G-Enabled Embedded Portable Device for Audio-based Networked Musical Interactions / Buccellato, P., Severi, L., Sacchetto, M., Langer, A., Zunino, C., Stefani, D., Malandrino, F., Matuschek, D., Rottondi, C., Turchet, L.. - ELETTRONICO. - (2026). (31st IEEE Symposium on Computers and Communications (ISCC 2026) Vilamoura (Por) 23-26 June 2026).

Availability:
This version is available at: 11583/3013300 since: 2026-07-20T13:36:16Z

Publisher:
IEEE

Published
DOI:

Terms of use:

This article is made available under terms and conditions as specified in the corresponding bibliographic description in the repository

Publisher copyright
IEEE postprint/Author's Accepted Manuscript

©2026 IEEE. Personal use of this material is permitted. Permission from IEEE must be obtained for all other uses, in any current or future media, including reprinting/republishing this material for advertising or promotional purposes, creating new collecting works, for resale or lists, or reuse of any copyrighted component of this work in other works.

(Article begins on next page)

26 November 2026

Power Consumption Characterization of a 5G-Enabled Embedded Portable Device for Audio-based Networked Musical Interactions

Pietro Buccellato, Leonardo Severi, Matteo Sacchetto, Cristina Rottondi
Dept. of Electronics and Telecommunications
Politecnico di Torino
Turin, Italy
{name.surname}@polito.it

Daniel Matuschek, Amin Langer
Modul 9 GmbH
Ermatingen, Switzerland
info@hifiberry.com

Claudio Zunino, Francesco Malandrino
National Research Council
IEIIT
Turin, Italy
{name.surname}@cnr.it

Domenico Stefani, Luca Turchet
Dept. of Information Engineering and Computer Science
University of Trento
Trento, Italy
{name.surname}@unitn.it

***Abstract*—Advanced Networked Music Performances (NMP) require embedded systems capable of real-time audio processing and wireless communication with strict performance constraints. In this paper, we present the design and power consumption evaluation of a prototypal portable device integrating a hi-fi soundcard and a 5G communication module. The proposed platform enables real-time audio acquisition, processing, and transmission in NMP scenarios. We experimentally characterize power consumption under multiple operating conditions, including idle states, 5G connectivity, and bidirectional audio streaming. Results show that the system exhibits a stable and predictable power profile, with average power consumption ranging from approximately 2.2 W in idle conditions up to 4.7 W during stereo audio streaming over 5G.**

***Index Terms*—Networked Music Performance, 5G, Embedded Systems, Power Consumption**

I. Introduction

Networked Music Performance (NMP) systems aim to enable geographically distributed musicians to perform together in real time, aiming to recreate the temporal precision and expressivity of co-located acoustic performances [1]. Achieving such conditions requires dedicated systems capable of minimizing end-to-end latency, jitter, and packet loss, which are critical factors for maintaining musical synchrony and interaction quality. Over the past years, several NMP platforms have been developed both in academic research and as commercial solutions, including JackTrip [2], LoLa [3], fast-music [4], UNISON [5], and Elk LIVE [6]. These systems may be based on desktop solutions, however, to achieve the best performances dedicated embedded devices are typically utilized.

More recently, the advent of 5G networks has opened new opportunities for NMPs by providing ultra-low latency, high bandwidth, and enhanced reliability through features such as network slicing and edge computing [7]. These capabilities make 5G a promising enabler for mobile and portable NMP scenarios, extending musical interaction beyond fixed, wired infrastructures. Various authors have deployed audio-based NMP systems into 5G architectures [8]–[11]. In this context, embedded systems integrated with 5G connectivity are emerging as key components, allowing compact, energy-efficient devices to support real-time audio processing and transmission.

A fundamental challenge in realizing these systems lies in the development of embedded hardware platforms capable of meeting stringent performance requirements. In particular, NMP applications require real-time audio acquisition, processing, and transmission, often under tight latency and reliability constraints [1]. At the same time, these platforms must remain compact, energy-efficient, and portable to support a wide range of use cases, including mobile performances, immersive installations, and distributed rehearsals. The integration of wireless communication technologies such as 5G further increases the complexity of the system design, introducing additional trade-offs between performance, energy consumption, and hardware scalability [12], [13].

While latency remains a critical parameter in NMP systems, its evaluation is highly dependent on network conditions, deployment scenarios, and system-level optimizations that extend beyond the hardware platform itself [14]. In contrast, power consumption represents an intrinsic property of the embedded system and plays a crucial role in determining

We acknowledge the support of the MUSMET project funded by the EIC Pathfinder Open scheme of the European Commission (grant agreement no. 101184379). This manuscript reflects only the authors' views and opinions and neither the European Union nor the European Innovation Council can be considered responsible for them. This publication is part of the project PNRR-NGEU which has received funding from the MUR- DM 118/2023.

its practical usability [15]. Indeed, energy efficiency directly impacts device portability, thermal management, operational stability, and long-term sustainability, all of which are essential for real-world applications of distributed music technologies. The strict performance requirements of NMP, combined with the constraints of portable, battery-powered hardware, introduce significant challenges in terms of power consumption and system optimization. Understanding and characterizing the energy behavior of such 5G-enabled embedded devices is therefore essential to ensure their practical usability in real-world musical applications.

For these reasons, this paper focuses specifically on the power consumption characterization of a prototypal embedded platform for remote musical interactions. The platform combines a high-quality audio interface with a single-board computing system and a 5G communication module within a compact and integrated architecture. This design enables the acquisition, processing, and transmission of audio data streams in real time, supporting distributed musical interaction scenarios. Through a systematic experimental campaign, we analyze the energy profile of the system under multiple operating conditions, including idle states, network connectivity, and real-time audio streaming over 5G. The results show that the system exhibits a baseline consumption around 2.2 W and peak consumption below 5 W during simultaneous audio processing and 5G communication. These findings demonstrate that the proposed platform achieves a favorable balance between functionality and energy efficiency, supporting its use in portable and embedded MM applications.

The remainder of this paper is organized as follows. Section II describes the system architecture of the prototype, detailing both hardware and software components as well as the integration of the 5G communication module. Section III presents the measurement methodology, including the experimental setup and the definition of the evaluated operating states. Section IV reports and discusses the power consumption results obtained from the measurement campaign. Finally, Section V concludes the paper and outlines directions for future work.

II. System Architecture

A. Hardware Components

From a design perspective, the proposed embedded device follows a modular approach, allowing the seamless integration of heterogeneous subsystems such as audio interfaces, communication modules, and peripherals. Its main elements include:

- a Raspberry Pi Compute Module 5, serving as the central processing unit and running a Linux-based operating system with real-time capabilities;
- an integrated DAC/ADC audio interface, enabling high-fidelity audio input and output through professional-grade connectors;
- a 5G modem (Quectel RM500Q-GL), providing broadband wireless connectivity;
- Multiple I/O interfaces, including USB, HDMI, and Ethernet, supporting extended functionalities.



Fig. 1. Embedded NMP device prototype with connected audio and networking interfaces.

The audio subsystem is tightly coupled with the compute module through an Inter-IC Sound (I2S) interface, which ensures deterministic and low-latency communication between the processor and the audio codecs. This direct hardware-level integration avoids the overhead typically associated with external USB audio devices and contributes to improved timing stability.

The device also exposes several connectivity options, including USB-A and USB-C ports, an HDMI output, and an Ethernet network interface. These interfaces enable flexible deployment scenarios, ranging from standalone operation to integration within larger systems or laboratory setups. Furthermore, the presence of a PCIe interface allows for future hardware extensions, such as storage modules or hardware accelerators. Fig. 1 shows the embedded NMP device prototype with connected audio and networking interfaces.

B. Audio Processing Pipeline

The embedded NMP device supports real-time audio acquisition, processing, and playback through a low-latency audio stack. Audio signals are captured via the integrated ADC, processed within the system, and rendered through the DAC with minimal buffering delays.

The software architecture relies on standard audio frameworks, ensuring compatibility with existing tools and enabling rapid development. Audio streams are managed through a pipeline that includes capture, optional processing (e.g., spatialization or effects), and transmission. The system operates at a sampling rate of 48 kHz, balancing audio quality and computational load.

For distributed interaction, the device adopts a peer-to-peer communication model based on UDP. In this configuration, audio data is packetized and transmitted directly between participating devices without relying on centralized servers for media transport. This approach minimizes communication overhead and allows for scalable multi-user scenarios. At the receiver side, buffering mechanisms are employed to compensate for network jitter while preserving real-time playback characteristics.

C. 5G Connectivity

Wireless communication is enabled through a 5G modem connected to the compute module via a USB 3.0 SuperSpeed interface. This configuration provides sufficient bandwidth to support high-quality audio streaming while maintaining compatibility with widely available hardware modules. The modem supports both public and private 5G deployments, allowing the system to operate in a variety of experimental and real-world environments.

The integration of 5G connectivity is a key feature of our proposed device, as it enables low-latency and high-throughput communication over wide geographical areas [16]. Preliminary network tests conducted on a dedicated indoor 5G testbed have demonstrated promising performance, including throughput up to 59.5 Mbps, packet jitter below 0.5 ms and negligible packet loss under controlled conditions. These results indicate that the communication subsystem is capable of supporting the data rates required for uncompressed audio streaming in NMP scenarios. However, it is important to note that end-to-end latency in wireless systems is influenced by multiple factors, including network configuration, radio conditions, and core network architecture. For this reason, latency measurements are not included in this paper and a comprehensive latency evaluation is left for future work. Instead, this study focuses on the intrinsic hardware characteristics of the system, particularly its power consumption under different operating conditions.

III. Measurement Methodology

This section describes the experimental methodology adopted to evaluate the power consumption of the prototype under different operating conditions. The objective of the measurement campaign is to characterize the energy profile of the system in a reproducible and systematic manner, capturing both steady-state behavior and variations induced by different workloads.

A. Setup

As shown in Fig. 2, power consumption measurements were performed using an FNIRSI FNB58 USB tester, configured in passthrough mode. In this configuration, the measurement device is placed inline between the power supply and the embedded device, allowing continuous monitoring of electrical parameters without interfering with normal operation.

The measurement setup consists of the following components:

- USB-C power supply (5 V, 5 A), connected to the 230 V, 50 Hz power grid, providing stable and sufficient power to the embedded NMP device;
- FNIRSI FNB58 USB tester, used to measure voltage and current in real time;
- embedded NMP device, acting as the load whose power consumption is evaluated;
- Personal computer (PC), used for data logging, visualization, and storage of measurement traces.

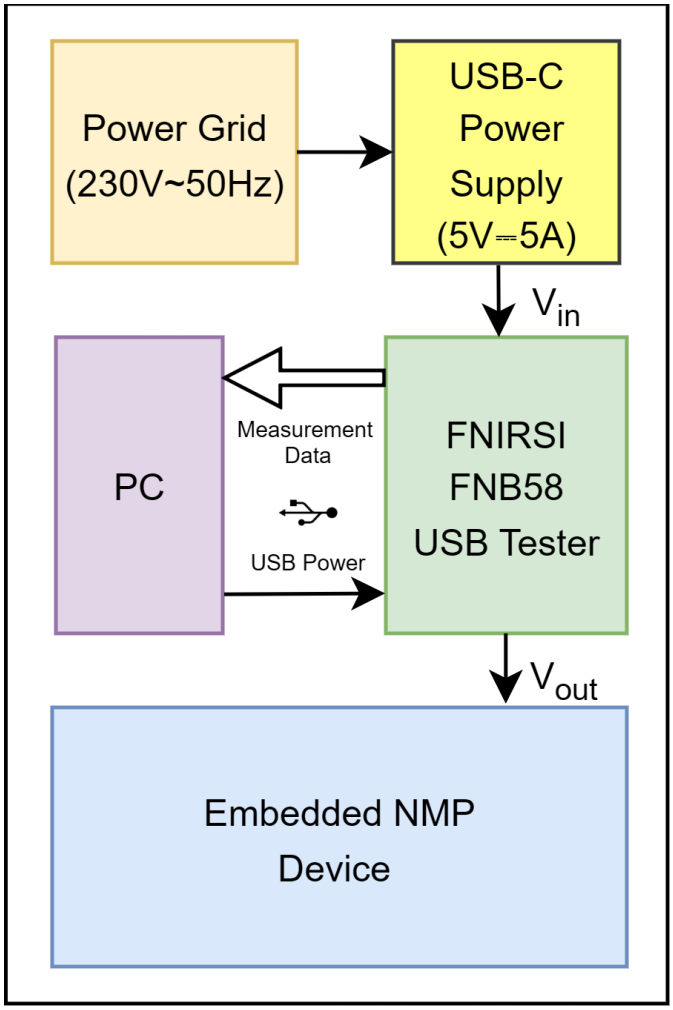

Fig. 2. Experimental setup for power consumption measurement.

The USB tester measures both the input voltage and the current drawn by the device, enabling the computation of instantaneous power consumption as the product of these two quantities. Measurements are sampled continuously over time at a rate of 100 Hz, allowing the capture of dynamic variations associated with changes in system activity and ensuring sufficient temporal resolution to accurately characterize both steady-state behavior and short-term power fluctuations. To ensure measurement reliability, the tester is powered independently from the PC, avoiding interference with the supply line used by the embedded device. This configuration minimizes potential measurement bias and ensures that the recorded values accurately reflect the device's power consumption. Furthermore, the use of a digital logging interface enables post-processing and statistical analysis of the collected data.

B. Measurement Campaign

The measurement campaign was designed to cover a representative set of operating conditions reflecting the typical usage of our embedded device. Three independent measure-

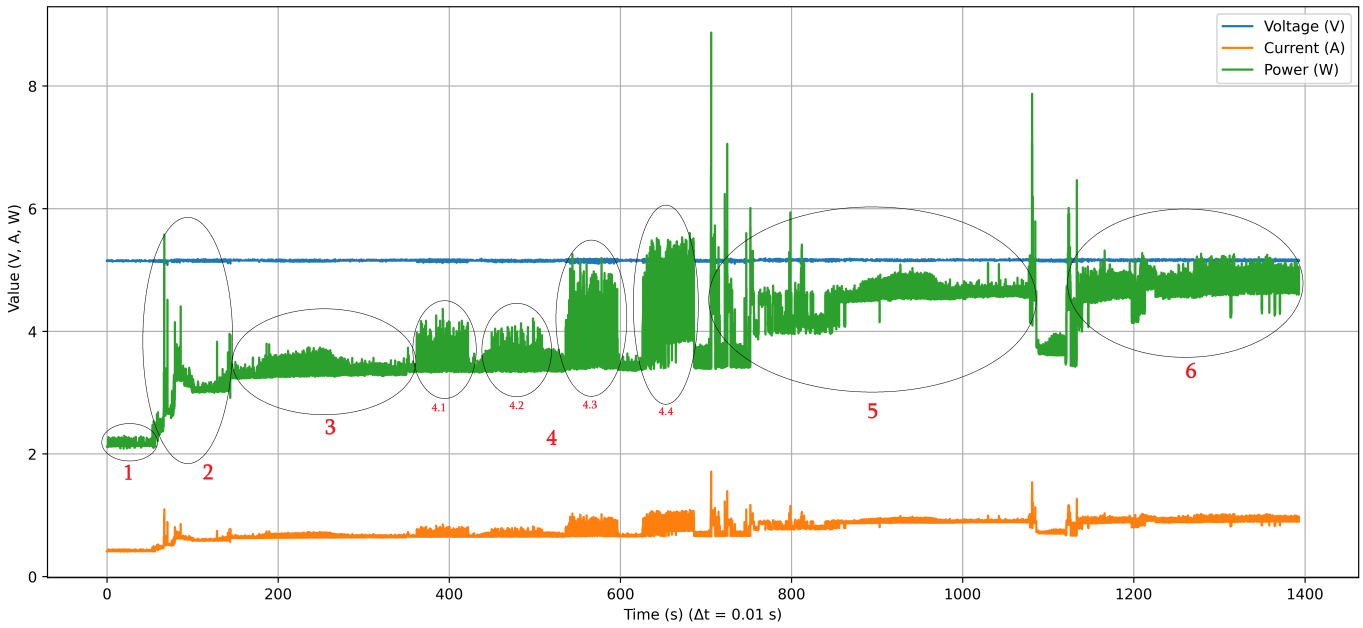

Fig. 3. Time series of voltage, current, and power consumption from a representative measurement session across all operating states.

ment sessions were conducted, each lasting approximately 25 minutes, in order to account for variability and ensure statistical consistency of the results.

During each session, the system was sequentially transitioned through six distinct operating states. These states correspond to different functional configurations and are selected to isolate the contribution of individual subsystems, such as the 5G modem and the audio processing pipeline. The evaluated operating states are defined as follows:

1) **Idle:** the system operates without the 5G modem connected, representing the baseline power consumption of the embedded platform;
2) **5G module connected:** the modem is physically connected to the system but not attached to a network, allowing for the evaluation of the additional power overhead introduced by the 5G communication module;
3) **5G network associated:** the device establishes a connection with a 5G cell, enabling network communication and introducing additional signaling activity;
4) **Synthetic traffic:** controlled UDP traffic is generated using `iperf` under four configurations: 3 Mb/s uplink, 3 Mb/s downlink, maximum achievable uplink rate, and maximum achievable downlink rate, in order to emulate different network load conditions;
5) **Local audio loopback:** the audio processing pipeline is operated locally without involving network communication, allowing the assessment of the computational cost of real-time audio acquisition and playback;
6) **Full audio streaming over 5G:** the system performs bidirectional audio streaming with a remote peer, combining both audio processing and wireless communication workloads.

The sequential execution of all states within a single session ensures consistency in environmental conditions, such as ambient temperature and supply stability.

IV. Results

This section presents the results of the power consumption measurements carried out on the embedded NMP device, along with an integrated discussion of the observed trends. The analysis focuses on the average power consumption across the six different operating states described in Section III, highlighting the contribution of individual subsystems and their combined effects. Fig. 3 shows a representative time series of the measured power consumption during one experimental session. This plot provides a qualitative overview of the system behavior, while the complete set of measurements is summarized in Table I, which reports minimum, average, and maximum values over three independent sessions for each operating condition.

A. Baseline Consumption

In idle conditions without the 5G module connected, the system exhibits a low average power consumption of approximately 2.2 W. This value represents the baseline energy footprint, including the compute module, memory, and minimal peripheral activity. The low consumption confirms the efficiency of the underlying hardware architecture when operating without external communication or intensive processing workloads.

When the 5G modem is physically connected but not yet associated with a network, the average power consumption increases to approximately 3.1 W. This increment reflects the

additional energy required to power the modem hardware and maintain its internal state, even in the absence of active data transmission. The observed increase highlights the inherent overhead introduced by integrating advanced communication modules into embedded systems.

B. Network Activity

Upon successful association with a 5G network, the system's power consumption further increases to approximately 3.4 W on average. This additional rise can be attributed to network signaling operations, synchronization procedures, and background communication tasks required to maintain connectivity with the cellular infrastructure.

Under synthetic traffic conditions generated using the `iperf` tool, the power consumption increases beyond this level, with the exact value depending on the data rate and direction of the traffic (uplink or downlink). In particular, higher throughput scenarios lead to increased utilization of both the communication interface and the processing resources of the system. These results indicate that network activity introduces a moderate but measurable contribution to the overall energy consumption, which scales with the intensity of the transmitted data.

From a system-level perspective, these findings suggest that while 5G connectivity is essential for enabling distributed applications, it introduces a non-negligible energy cost that must be considered when designing energy-efficient embedded platforms.

C. Audio Processing

The activation of the audio processing pipeline has a more pronounced impact on power consumption. In the local audio loopback configuration, where audio is captured and rendered without involving the network, the system reaches an average power consumption of approximately 4.2 W.

This increase is primarily due to the computational load associated with real-time audio acquisition, buffering, and playback. The use of a low-latency audio stack and real-time scheduling further contributes to sustained CPU utilization, which directly affects energy consumption. Compared to the baseline and network-only states, audio processing represents a dominant factor in the system's power profile.

These results emphasize the importance of optimizing audio processing pipelines in NMP systems, as they constitute a significant portion of the total energy budget, especially in scenarios where communication overhead is limited.

D. Full System Operation

The highest power consumption is observed during full system operation, where both audio processing and 5G communication are active simultaneously. In this configuration, corresponding to bidirectional audio streaming with a remote peer, the system reaches an average consumption of approximately 4.7 W.

This operating state combines the computational demands of real-time audio processing with the communication overhead of continuous data transmission and reception. Despite the increased workload, the system demonstrates a stable and predictable power profile, without significant fluctuations or transient peaks beyond those expected from dynamic processing and network activity.

For comparison, general-purpose laptops typically exhibit significantly higher power consumption even under light workloads. Ultrabook-class devices, such as MacBook Air systems, consume on the order of 12–18 W during typical office use (e.g., web browsing and document editing), with idle consumption already in the range of 6–11 W depending on display activity, as also reported in Apple's official environmental documentation [17]. While this comparison refers to general-purpose usage rather than a controlled NMP workload, it provides a meaningful baseline for contextualizing the energy efficiency of the proposed system.

TABLE I
POWER CONSUMPTION MEASUREMENTS UNDER DIFFERENT OPERATING STATES.

Operating State	**Meas.**	**Min [W]**	**Avg [W]**	**Max [W]**
1. Idle	M1	2.08	2.14	2.29
	M2	2.22	2.23	2.51
	M3	2.31	2.42	2.70
	Avg	**2.20**	**2.26**	**2.50**
2. 5G module connected	M1	2.09	3.07	5.57
	M2	2.20	3.22	5.77
	M3	2.31	3.20	6.04
	Avg	**2.20**	**3.16**	**5.79**
3. 5G network associated	M1	3.23	3.40	4.88
	M2	3.33	3.41	3.65
	M3	3.38	3.48	4.79
	Avg	**3.31**	**3.43**	**4.44**
4.1. Synthetic traffic 3Mb uplink	M1	3.32	3.49	4.36
	M2	3.33	3.45	4.37
	M3	3.38	3.56	4.51
	Avg	**3.35**	**3.50**	**4.41**
4.2. Synthetic traffic 3Mb downlink	M1	3.33	3.47	4.20
	M2	3.34	3.49	4.21
	M3	3.37	3.53	5.00
	Avg	**3.34**	**3.50**	**4.47**
4.3. Synthetic traffic max uplink	M1	3.36	3.74	5.25
	M2	3.38	3.83	5.44
	M3	3.43	3.85	5.47
	Avg	**3.39**	**3.81**	**5.39**
4.4. Synthetic traffic max downlink	M1	3.37	4.24	5.60
	M2	3.39	4.14	5.33
	M3	3.43	4.26	5.70
	Avg	**3.40**	**4.21**	**5.54**
5. Local audio loopback	M1	3.95	4.57	7.87
	M2	3.38	3.86	7.79
	M3	3.49	4.10	7.48
	Avg	**3.61**	**4.18**	**7.71**
6. Full audio streaming over 5G	M1	3.99	4.73	5.31
	M2	4.08	4.75	5.65
	M3	4.11	4.70	5.32
	Avg	**4.06**	**4.73**	**5.43**

E. Measurement Uncertainty

The uncertainty evaluation, which accounts for both measurement variability and instrument accuracy, resulted in a combined standard uncertainty below 0.01 W under all tested conditions. Accordingly, a single representative expanded uncertainty of 0.01 W is adopted, using a coverage factor $k = 3$. This value ensures a high level of confidence in the reported measurements while consistently reflecting both the stability of the system and the performance limits of the measurement setup.

F. Battery Selection for Portable Operation

Considering the power consumption characterization presented in the previous subsections, we estimate the achievable operating time and derive design considerations for battery selection in view of portable operation. To this end, we consider standard 21700 lithium-ion cells, which provide a favorable balance between energy density ($\sim$250 Wh/kg) and form factor (21 mm diameter, 70 mm length). A single 5000 mAh cell, with a mass of approximately 70 g, provides about 18.5 Wh of energy. Accounting for an estimated 10% conversion loss in the boost stage (from 3.7 V to 5 V), a single cell enables approximately 3.5 hours of continuous operation under the measured worst-case average power consumption of 4.7 W.

The device is designed to accommodate two battery slots connected in parallel, each isolated through an ideal diode circuit based on a P-channel MOSFET and feeding a shared power rail. Since the enclosure accommodates both cells regardless of the configuration, one or two cells may be installed depending on the desired trade-off between weight and operating time. With two cells, the total battery mass increases to 140 g, extending the operating time to approximately 7 hours.

This modular approach does not require any reconfiguration, as the available capacity scales automatically with the number of installed cells. The resulting flexibility supports a range of usage scenarios, from lightweight mobile operation to extended rehearsal or performance sessions.

V. Conclusion

This paper presented the design and power consumption analysis of a 5G-enabled embedded device for audio-based musical interactions. The proposed platform integrates real-time audio processing capabilities with wireless communication in a compact embedded system, enabling distributed musical interaction scenarios. Through a systematic experimental campaign, we characterized the power consumption of the device under a range of operating conditions, including idle states, network connectivity, and full bidirectional audio streaming over 5G. The experimental results demonstrate that the system achieves a stable and efficient power profile across all tested configurations. The power consumption always remains below 5 W, confirming the suitability of the embedded NMP device for portable and energy-constrained applications.

Future work will focus on reducing the computational overhead of the audio processing pipeline, improving the energy efficiency of wireless communication, and exploring adaptive power management strategies. Additionally, a more comprehensive evaluation of end-to-end latency in real-world 5G deployments will be conducted, taking into account network configuration and environmental factors.

References

[1] C. Rottondi, C. Chafe, C. Allocchio, and A. Sarti, "An overview on networked music performance technologies," *IEEE Access*, vol. 4, pp. 8823–8843, 2016.

[2] J. Cáceres and C. Chafe, "Jacktrip: Under the hood of an engine for network audio," *Journal of New Music Research*, vol. 39, no. 3, pp. 183–187, 2010.

[3] C. Drioli, C. Allocchio, and N. Buso, "Networked performances and natural interaction via lola: Low latency high quality a/v streaming system," in *International Conference on Information Technologies for Performing Arts, Media Access, and Entertainment*. Springer, 2013, pp. 240–250.

[4] A. Carôt, C. Hoene, H. Busse, and C. Kuhr, "Results of the fast-music project—five contributions to the domain of distributed music," *IEEE Access*, vol. 8, pp. 47 925–47 951, 2020.

[5] C. Werner and R. Kraneis, "UNISON: A Novel System for Ultra-Low Latency Audio Streaming Over the Internet," in *2021 IEEE 18th Annual Consumer Communications Networking Conference*, 2021, pp. 1–4.

[6] L. Turchet and C. Fischione, "Elk Audio OS: an open source operating system for the Internet of Musical Things," *ACM Transactions on the Internet of Things*, vol. 2, no. 2, pp. 1–18, 2021.

[7] S. Wijethilaka and M. Liyanage, "Survey on network slicing for internet of things realization in 5g networks," *IEEE Communications Surveys & Tutorials*, vol. 23, no. 2, pp. 957–994, 2021.

[8] A. Carôt, M. Dohler, S. Saunders, F. Sardis, R. Cornock, and N. Uniyal, "The world's first interactive 5G music concert: Professional quality networked music over a commodity network infrastructure," in *Proc.17th Sound and Music Computing Conf.*, 2020, pp. 407–412.

[9] J. Dürre, N. Werner, S. Hämäläinen, O. Lindfors, J. Koistinen, M. Saarenmaa, and R. Hupke, "In-depth latency and reliability analysis of a networked music performance over public 5G infrastructure," in *Audio Engineering Society Convention 153*. Audio Engineering Society, 2022.

[10] K. Tsioutas and G. Xylomenos, "Network music performance in 5g networks," in *2025 IEEE 6th International Symposium on the Internet of Sounds (IS2)*. IEEE, 2025, pp. 1–6.

[11] L. Turchet and P. Casari, "On the impact of 5g slicing on an internet of musical things system," *IEEE Internet of Things Journal*, vol. 11, no. 19, pp. 32 079–32 088, 2024.

[12] C. Rinaldi, K. S. Tharakan, L. Turchet, C. Rottondi, C. Centofanti, and C. Fischione, "Architecting the musical metaverse: Lessons from 5g and emerging technologies," in *2025 IEEE 6th International Symposium on the Internet of Sounds (IS2)*. IEEE, 2025, pp. 1–10.

[13] L. Turchet, C. Rinaldi, C. Centofanti, L. Vignati, and C. Rottondi, "5G-Enabled Internet of Musical Things Architectures for Remote Immersive Musical Practices," *IEEE Open Journal of the Communications Society*, 2024.

[14] L. Turchet and P. Casari, "Assessing a Private 5G SA and a Public 5G NSA Architecture for Networked Music Performances," in *Proceedings of the 4th International Symposium on the Internet of Sounds*. IEEE, 2023, pp. 1–6.

[15] C. Guo, S. Ci, Y. Zhou, and Y. Yang, "A survey of energy consumption measurement in embedded systems," *IEEE Access*, vol. 9, pp. 60 516–60 530, 2021.

[16] L. Turchet, A. Boem, O. Ayoub, F. Malandrino, J. Llorca, C. Fischione, and C. Rottondi, "Towards a Networking Architecture for the Musical Metaverse: The MUSMET Vision," in *Proceedings of the 6th IEEE International Symposium on the Internet of Sounds*. IEEE, 2025, pp. 1–10.

[17] Apple Inc., "Macbook air product environmental report," https://www.apple.com/environment/reports/docs/MacBook-Air-Environmental-Report.pdf, 2023.