POLITECNICO DI TORINO
Repository ISTITUZIONALE

A conceptual view of grid weakness in transmission and distribution systems

Original
A conceptual view of grid weakness in transmission and distribution systems / Salam, I.U., Mazza, A., Chicco, G.. - In: ELECTRIC POWER SYSTEMS RESEARCH. - ISSN 0378-7796. - ELETTRONICO. - 259:(2026), pp. 1-20. [10.1016/j.epsr.2026.113193]

Availability:
This version is available at: 11583/3013193 since: 2026-07-17T10:39:07Z

Publisher:
Elsevier

Published
DOI:10.1016/j.epsr.2026.113193

Terms of use:

This article is made available under terms and conditions as specified in the corresponding bibliographic description in the repository

Publisher copyright

(Article begins on next page)

23 November 2026

Electric Power Systems Research 259 (2026) 113193

Contents lists available at ScienceDirect

Electric Power Systems Research

journal homepage: www.elsevier.com/locate/epsr

Review

A conceptual view of grid weakness in transmission and distribution systems

Izhar Us Salam, Andrea Mazza, Gianfranco Chicco *

Dipartimento Energia "Galileo Ferraris", Politecnico di Torino, Corso Duca degli Abruzzi 24, 10129 Torino, Italy

ARTICLE INFO

Keywords:
Grid strength
Inertia
Renewable energy sources
Distributed generation
Distribution system
Transmission network
Inverters
Demand response

ABSTRACT

The increasing proliferation of renewable energy-based generation and inverter-based resources in the existing power system infrastructure has led to a decline in power system inertia, due to the reduction of conventional synchronous generators (SGs) connected to the grid. The SG reduction brings significant challenges concerning system stability, short-circuit current levels, and protection system coordination. This paper presents a unified approach to discuss these aspects, comprehensively exploring the technical and operational challenges involved in the integration of various resources in transmission and distribution systems. The aspects addressed include short circuit capacity, low inertia, voltage and frequency instability, and their systematic impacts on the power system. This contribution critically investigates network weaknesses in transmission and distribution systems, considering the different structural and operational characteristics of these systems, from the current literature and practical scenarios. Moreover, the paper discusses control and mitigation strategies aimed at better operation and efficient grid integration of renewable energy sources and other mixes of resources. The discussion on specific aspects emphasises the need to promote coordination between the transmission and distribution system operators, extended to the whole aspects of system control, modelling, and analysis, by considering both traditional and innovative approaches to address new challenges.

List of Acronyms

AC	Alternating Current
BESS	Battery Energy Storage System
BSCR	Basic Short Circuit Ratio
CSCR	Composite Short Circuit Ratio
DC	Direct Current
DER	Distributed Energy Resource
DG	Distributed Generation
DMS	Distribution Management System
DR	Demand Response
DSM	Demand Side Management
DSO	Distribution System Operator
ESS	Energy Storage Systems
ECSCR	Energy-storage considered Short Circuit Ratio
FACTS	Flexible AC Transmission System
FFR	Fast Frequency Response
FRT	Fault Ride Through
GFLI	Grid Following Inverter
GFMI	Grid Forming Inverter
HV	High Voltage
HVAC	High Voltage Alternating Current
HVDC	High Voltage Direct Current
IBR	Inverter-based Resource
IEC	International Electrotechnical Commission
IILSCR	Inverter Interaction Level Short Circuit Ratio
LV	Low Voltage
MESCR	Multi-infeed Effective Short Circuit Ratio
MV	Medium Voltage
PLL	Phase Locked Loop
PMU	Phasor Measurement Unit
POC	Point of Connection
PV	Photovoltaic
RES	Renewable Energy Sources
RMS	Root Mean Square
RoCoF	Rate of Change of Frequency
SC	Synchronous Compensator
SCR	Short Circuit Ratio

* Corresponding author.
E-mail address: gianfranco.chicco@polito.it (G. Chicco).

https://doi.org/10.1016/j.epsr.2026.113193
Received 31 December 2025; Received in revised form 20 April 2026; Accepted 22 April 2026
0378-7796/© 2026 The Author(s). Published by Elsevier B.V. This is an open access article under the CC BY-NC-ND license (http://creativecommons.org/licenses/by-nc-nd/4.0/).

SCRIF	Short Circuit Ratio with Interaction Factor
SDSCR	Site-dependent Short Circuit Ratio
SMES	Superconducting Magnetic Energy Storage
STATCOM	Static Synchronous Compensator
SVC	Static Var Compensator
SR	Stiffness Ratio
SG	Synchronous Generator
TSO	Transmission System Operator
VSG	Virtual Synchronous Generator
VSM	Virtual Synchronous Machine
WSCR	Weighted Short Circuit Ratio

1. Introduction

The recent advances in the diffusion of renewable energy sources (RES), especially non-dispatchable ones like solar and wind, have significantly altered the operation and dynamics of the power system. Meanwhile, the electricity demand is rising at twice the rate of overall energy consumption and is expected to grow by more than half by 2040 [1]. According to the 2023 World Energy Outlook report [2], these trends could result to a 50 % increase in RES-generated electricity by 2050 [1]. However, the effective integration of these resources into the conventional power system poses numerous challenges to grid stability, particularly in terms of frequency control and voltage regulation.

Addressing the effects of grid-connected RES requires identifying a consistent framework that accounts for voltage levels, network structures, and the prevailing types of grid connections for RES. For this purpose, a fundamental distinction is established between:

- *Transmission systems*: based on a meshed network structure, are operating at a voltage level above 35 kV, as established by the International Electrotechnical Commission (IEC), classically indicated as high voltage (HV)[1]. In each country, the transmission system operator (TSO) sets out the technical rules and grid code for transmission system planning, operation and maintenance. HV transmission networks are essential for efficient power transmission over long distances. High voltage direct current (HVDC) solutions can be used to reach longer distances than high voltage alternating current (HVAC) solutions, because the reactive nature of HVAC system lines imposes limits in the power transfer capabilities that do not appear for HVDC systems [3].
- *Distribution systems*: the networks can work at different voltage levels, in the range of low voltage (LV, up to 1 kV) or medium voltage (MV, from more than 1 kV to the lower voltage limit for HV). In MV, the network structure is weakly meshed with radial operation, while in LV the network structure is generally radial. A distribution system operator (DSO) manages the distribution system located in a specific territory.

The distinction between transmission and distribution systems is reflected in various aspects of the RES diffusion. In distribution systems, RES are part of the overall framework of distributed energy resources (DERs), which includes distributed generation (DG), demand response (DR), and distributed storage connected to the grid side or at the user side. In particular, DG can be partitioned into RES and non-RES local generation, using different types of models in which RES are typically associated with the need for applying an appropriate treatment of possible uncertainty. In transmission systems, the main distinction is between dispatchable and non-dispatchable resources, with RES classified as non-dispatchable, intermittent, or variable renewable energy generation. The distinction indicated above is key to understand the effects of the RES presence in different systems and to establish the rules and standards applied to RES. For example, any RES connected to HV, such as a large wind farm or a pumping storage hydro power plant, cannot be considered as a DG. However, the pumping storage hydro power plant is a type of RES that can be dispatched, unlike a wind farm. A small run-of-river hydro power plant connected to the distribution system is a RES-based DG.

The traditional transmission system mainly relied on synchronous generators (SGs), which inherently provided the system's inertia that aids in frequency stability. Nowadays, the main differences with respect to the past are due to the progressive shift towards the diffusion of new generators with inverter-based grid connection that can displace traditional generation. Many of these generators are inverter-based resources (IBRs) supplied by RES and lack in providing the required inertia for the power system, which in turn leads to challenges in maintaining grid stability [4]. The related issues appear especially in weaker power grids, making power systems more susceptible to frequency instabilities and voltage deviations after disturbances. The issue of frequency stability is an area of major concern in modern power systems having weak inertial support, including real-time effects and control strategies in microgrids [5].

In the previous paragraph, the term *weak* is introduced generically. However, to better understand the complexity of today's power systems, the concept of grid weakness must be clarified. In fact, two types of grid weaknesses can be identified:

- *Structural*, depending on the characteristics of the grid infrastructure.
- *Operational*, depending on the operation and control of the connected equipment.

The two types of weakness can occur in both transmission and distribution systems. However, the reasons related to the grid weakness are not the same for all systems. In transmission systems, a meshed structure may provide greater structural strength, and the presence of SGs may lead to higher inertia during disturbances. In distribution systems, the radial structure is inherently structurally weaker, while the addition of DERs can improve the likelihood of keeping the lights on in the event of supply interruptions. On the other hand, the diffusion of DG in distribution systems (especially for DG with rotating machines) can increase the short-circuit levels with the risk of exceeding the limits indicated by the DSO to users. SGs generate 5–10 pu. fault currents (normal condition) while IBRs produce 1–2 pu. fault currents[2] [6,7]. In addition, the nature of the loads and generations connected to the grid is evolving, with possible power injections from the distribution grid up to the supply point, leading to reverse power flow conditions. These aspects indicate the need to revisit the operational conditions of the equipment connected to the grid, as well as the models and tools used to analyse transmission and distribution systems. More particularly, there is an emergent need to promote TSO-DSO coordination, extended to all aspects of system control, modelling and analysis.

In the context outlined above, this paper aims to discuss various aspects related to grid weakness from different perspectives across transmission and distribution systems, following a widespread logical development not found in previous reviews and studies.

Table 1 compares this study with previous review articles, focusing on the key aspects discussed in this work. Unlike many existing reviews that mainly examine system strengths and weaknesses at the transmission level, effects of DERs at the distribution level, frequency and voltage-related issues, and control and mitigation strategies, this paper uniquely combines network weaknesses across all three voltage levels (HV, MV, LV) into a single comprehensive unified framework.

[1] The HV limit has been set to values different with respect to the IEC limit in some jurisdictions.

[2] The upper limit 2 pu indicatively corresponds to the critical short-circuit ratio reported in reference [6] for the typical inverter design with operation at the maximum available power.

Table 1
Comparison of the present study (PS) with some previous review articles.

Reference	Transmission system weakness	Distribution system weakness / DERs impacts	Frequency stability / Low inertia impacts	Voltage support / Short-circuit limits	Multi-level perspective (HV-MV-LV)	Control and mitigation strategies	TSO-DSO coordination
[7]	✓	–	✓	✓	–	✓	–
[8]	✓	–	✓	✓	–	✓	–
[9]	✓	–	✓	–	–	✓	–
[10]	✓	–	✓	–	–	–	–
[11]	✓	–	–	✓	–	✓	–
[12]	–	✓	–	✓	–	✓	–
[13]	–	✓	–	✓	–	✓	–
[14]	–	✓	–	✓	–	–	–
[15]	–	✓	–	–	–	–	✓
PS	✓	✓	✓	✓	✓	✓	✓

Note: ✓ indicates aspects addressed in the review; – indicates aspects not explicitly covered.

This paper also emphasises robust control and mitigation strategies and highlights the importance of improved TSO-DSO coordination. Specifically, the study's primary focus[3] is to highlight considerations on how low inertia, frequency deviations, and short circuit limitations in highly RES and IBR dominated power systems impact the overall system performance, based on a selected set of mostly recent literature contributions.

The main contributions of this paper are as follows:

- Establish the framework that refers to the study of grid weakness for transmission and distribution systems.
- Identify the types of network weakness in a deeply RES and IBR penetrated power system, mainly focusing on frequency instability and voltage control aspects.
- Summarise how effective control and mitigation strategies contribute to the efficient integration of a mix of resources for improving the security and flexibility of power system operation.
- Discuss how the aspects related to grid weakness for transmission and distribution systems require appropriate TSO-DSO coordination.

To enhance clarity, Fig. 1 summarises the overall scope and categorisation of the reviewed literature. The article structures the discussion around four primary areas: (i) fundamental characterisation, (ii) network analysis, (iii) control and mitigation strategies, and (iv) TSO-DSO coordination. Within these areas, the literature addresses key aspects such as frequency and inertia effects, voltage and short-circuit capacity, network considerations (impedance characteristics, power flows, congestion, etc.), and protection factors in transmission and distribution systems. Building on these aspects, the article emphasises the interconnections in grids with deep RES penetration and offers detailed strategies for effective control and mitigation. This integrated approach fosters a comprehensive understanding of interconnected challenges rather than addressing each issue separately.

Fig. 2 presents a conceptual framework of the issues covered in this article, showing how power systems are evolving toward low-inertia operation, as well as the causes of grid weakness, and the related challenges and mitigation strategies.

2. Fundamental characterisation and sources of weakness

In an ideal alternating current (AC) system, the voltage at any node should have a purely sinusoidal waveform at nominal frequency, with root mean square (RMS) equal to the rated voltage and balanced conditions in three-phase systems (i.e., delay of one-third of the period for the waveforms at successive phases). In an ideal direct current (DC) system, the voltage at any node should be constant, with amplitude equal to the rated voltage. However, during system operation, many factors make the operating conditions deviate from the ideal case. The main aspects refer to the characteristics of demand, the possible occurrence of contingencies, the uncertain behaviour of users and RES, the non-linearity of loads, generation and control systems, and the activation of constraints. In particular, system stability must be maintained in accordance with a credible set of contingencies. How much the system can withstand the effects of the non-idealities determines the network's strength or weakness. For studying the system operation under variable conditions, frequency and voltage ranges can be established, analysing the possible weakness in terms of deviations with respect to these ranges. However, because of the structural and operational differences between transmission and distribution systems, the frequency and voltage ranges differ, so a unified formulation of grid weakness across all types of systems cannot be established.

The following subsections address the main aspects that enable a better understanding of the concepts of structural or operational weakness of the grid, starting from relevant definitions, up to establishing a comprehensive framework for categorising the sources of weakness.

2.1. Stability-related aspects

The stability of voltage and frequency has been traditionally studied independently. However, in modern weak grids primarily powered by IBRs, these two factors are closely intertwined. Voltage instability, often caused by a lack of reactive support under low short circuit ratio (SCR) conditions, can affect frequency stability through mechanisms such as the phase-locked loop (PLL) and active power control in inverters. Conversely, significant frequency deviations can reduce the current capacity of converters, decrease reactive support, and lead to voltage issues. This increasing interdependence emphasises the importance of an integrated approach to analysing voltage and frequency behaviour in power systems with deep RES penetration and has been recognised by extending the definitions of power system stability to incorporate converter-driven stability and resonance stability. This is essential because the dynamic behaviour of converter-interfaced generation poses new challenges for power system stability due to interactions among different controllers, reduced overall system inertia, and limited contribution of short-circuit currents during faults compared to traditional SGs [17]. Moreover, the classical view of voltage stability refers to undervoltage conditions. With the increasing diffusion of DERs, new situations that lead to overvoltage-related stability conditions are likely to occur. For instance, an isolated system connected to the HV transmission network with a single power station containing SGs and several

[3] Further causes of operational weakness could depend on the absence or the inadequacy of market/regulatory setups able to provide the right incentives for the deployment of appropriate resources in the short-term [16]. Addressing these aspects, which strongly depend on the structure of the electricity business in specific jurisdictions, is outside the scope of this paper.

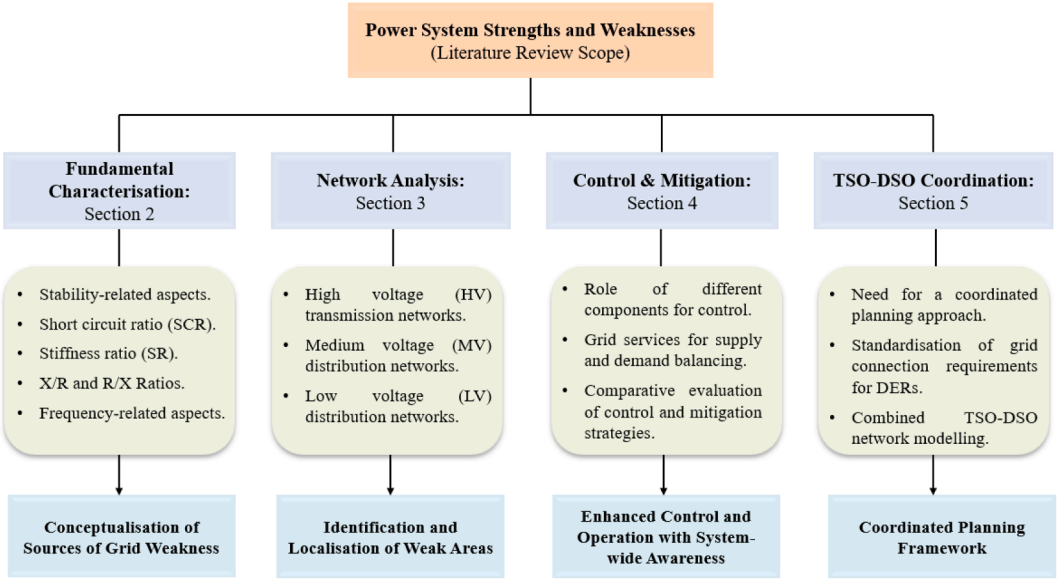

Fig. 1. Summary and categorisation of the reviewed literature.

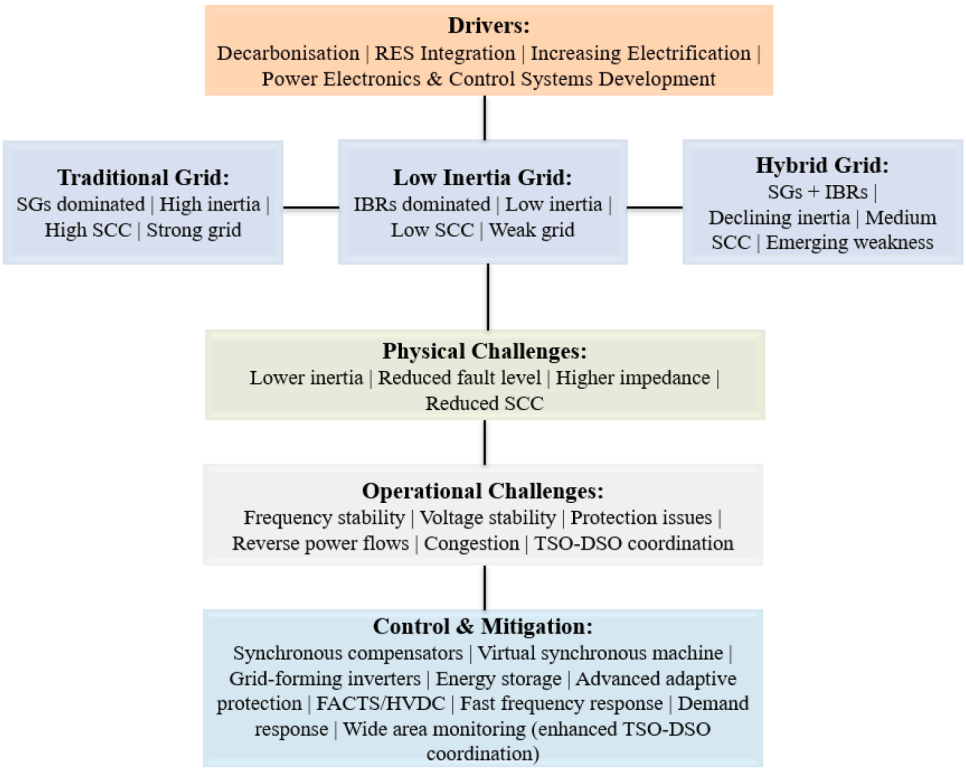

Fig. 2. Conceptual framework of the issues covered in this article.

renewable plants may be susceptible to over-voltage conditions, particularly under light load conditions when the SGs operate in under-excitation mode to absorb reactive power from the lines produced by the HV network, potentially leading to voltage instability due to the reactive power limits of the SGs [18]. In addition, the lack of synchronous reactive power absorption capacity, combined with low loading conditions, can significantly contribute to an overvoltage-driven blackout [19].

Likewise, in the context of frequency stability, network weakness refers to a power system's inability to maintain frequency within the limits set around the nominal frequency in response to disturbances. This weakness is intensified by the rising integration of RES and IBRs in the system, which lacks the inherent inertia provided by SGs, thereby making system frequency control more challenging. Table 2 describes the key terms used in transmission and distribution networks.

2.2. *Short circuit ratio (SCR)*

In steady-state calculations, the power system SCR indicates the strength of a system network bus in relation to its rated power [6,7,21]. The SCR metric is used to evaluate the grid strength in response to the introduction of generation connected to the grid through IBR [22]. Various definitions of SCR have been provided in the literature, tailored to specific considerations and system conditions, as summarised in

Table 2
Key terms description in transmission and distribution networks.[4]

Terms	Transmission networks	Distribution networks
System stability	Refers to the capability of the bulk power system to maintain synchronism, frequency, and voltage within acceptable limits following a disturbance.	The capability of a distribution feeder or microgrid to sustain frequency and voltage within acceptable limits following local disturbances and load variations.
Inertia	Depends on the kinetic energy stored in the rotating mass of SGs that resists frequency perturbations.	Usually absent in distribution networks. However, it can be provided from the upstream transmission system or in the form of emulated inertia from DERs.
System weakness	Low system strength in terms of the short-circuit ratio to sustain contingency events and facilitate the integration of IBRs.	Low feeders' strength and inertia to react to voltage and frequency fluctuations due to the low fault current level and challenges in integrating DERs.
Frequency stability	The ability to maintain frequency in the nominal range following a disturbance resulting in a significant mismatch between generation and load.	The ability of a distribution feeder to maintain or restore the local frequency in an acceptable range following a disturbance or DER intermittency.
Voltage stability	The ability of a power system to maintain voltage within acceptable limits at all buses after being subject to disturbances from initial operating conditions.	The ability of the distribution feeder to maintain voltage within operating limits following variation in load and DERs output.

[4] For details on the terms mentioned in Table 1, see reference [20].

Table 3
Different types of SCR calculation methods in the literature studies.

SCR Type	Description	Mathematical Formulation
Basic SCR (*BSCR*)	The ratio of short circuit apparent power from three-phase fault at POC and the DER rating at that location. *BSCR* is more appropriate for representing system strength when only one IBR is connected. It does not consider multiple IBRs or RES.	$BSCR_k = \frac{S_{sc,k}}{P_{R,k}}$
SCR with interaction factor (*SCRIF*)	$SCRIF_k$ also accounts for the voltage variations at the nodes connected to node k, belonging to the set $\mathbf{B}_k$.	$SCRIF_k = \frac{S_{sc,k}}{P_{R,k} + \sum_{\substack{j\in\mathbf{B}_k \\ j\neq k}} \left(\frac{\Delta V_k}{\Delta V_j} P_{R,j}\right)}$
Site-dependent SCR (*SDSCR*)	Considers the effects of interactions among multiple IBRs connected at various nodes belonging to the set $\mathbf{B}_k$. This method implements operating conditions based on the voltage stability boundary.	$SDSCR_k = \frac{V_{R,k}^2}{\left(P_{R,k} + \sum_{\substack{j\in\mathbf{B}_k \\ j\neq k}} \frac{Z_{B,kk}}{Z_{B,jj}} \frac{V_{R,k}}{V_{R,j}} P_{R,j}\right) Z_{B,kk}}$
Inverter interaction level SCR (*IILSCR*)	Assesses interactions among IBRs by analysing the power output of DER and the power inflow from adjacent IBRs, utilising the line power flow $P_{R,jk}$ from node j to node k.	$IILSCR_k = \frac{S_{sc,k}}{P_{R,k} + \sum_{\substack{j=1 \\ j\neq k}}^{N_{DER}} P_{R,jk}}$
Multi-infeed effective SCR (*MESCR*)	Primarily used to determine the strength of multi-infeed AC/DC power systems. It considers the interaction between multiple DC circuits connected to the AC network with power P_{DC} and accounts for the converter support of reactive power.	$MESCR_k = \frac{S_{sc,k} - Q_{C,k}}{P_{DC,k} + \sum_{\substack{j=1 \\ j\neq k}}^{K} \frac{Z_{B,kj}}{Z_{B,kk}} P_{DC,j}}$
Composite SCR (*CSCR*)	Considers the contribution of multiple DERs $i = 1,\ldots, N_{DER}$ connected at the same bus or adjacent network by estimating the combined equivalent general system impedance at the common medium voltage level.	$CSCR = \frac{S_{sc,zone}}{\sum_{i=1}^{N_{DER}} P_{R,i}}$ with $S_{sc,zone} = \frac{V_{zone}^2}{\lvert Z_{th,zone}\rvert}$
Weighted SCR (*WSCR*)	Updated SCR proposed by the Electric Reliability Council of Texas (ERCOT) that considers the interaction of multiple IBRs within a power network. WSCR provides a more accurate description of system strength than BSCR. However, WSCR does not consider power factor and impedance angle.	$WSCR = \frac{\sum_{k=1}^{K} S_{sc,k} P_{R,k}}{\left(\sum_{k=1}^{K} P_{R,k}\right)^2}$

Table 3.

Considering a network with K nodes and assuming that the point of connection (POC) with the grid is located at node k, the entries that appear in the different formulations are mainly based on the short-circuit capacity ($S_{sc,k}$), expressed as an apparent power before the connection of a new IBR to the POC. Other entries used are the DER or IBR rated power (P_R), the rated voltage (V_R), the reactive power compensation (Q_C), the equivalent impedance ($Z_{B,kk}$) given by the diagonal term of the bus impedance matrix of the system, the equivalent impedance ($Z_{B,ij}$) between node i and node j that depends on the off-diagonal term of the bus impedance matrix of the system, and $\mathbf{B}_k$ as the set of nodes connected to node k. Most indicators are node-based, while the weighted SCR (*WSCR*) is a global indicator. As a common point for all SCR type indices, a smaller value of SCR implies a weaker grid.

Nevertheless, the indices listed in Table 3 depend on a short-circuit current at a specific location. In a system with deep penetration of DERs, the effectiveness of these SCR-based indices in assessing system strength needs further investigation. In particular, when deeper penetration of IBRs replaces conventional generation (mainly in transmission systems), the short-circuit level decreases, and the network's weakness becomes mainly related to frequency stability problems with low fault-clearing rates, which require advanced control methods and system enhancements. As IBRs substitute for SGs, the grid could become unable to maintain stable operation of the power electronic converters connecting wind and PV sources [21]. Conversely, when DG of any type is connected to a system with little or no local generation, the increase in the short-circuit level becomes a more stringent issue.

2.3. Stiffness ratio (SR)

In the literature, various definitions for the term SR have been used, with different meanings. Considering the DER connection to a given node k, a comparison has been made between the short-circuit power ($S_{sc,k}$) of the system before the inclusion of DER and the short-circuit capacity ($S_{scDER,k}$) of the DER, calculating the ratio (ρ) from the following expression included in the Application Guide to the IEEE

Standard 1547 [23]:

$$\rho = 1 + \frac{S_{sc,k}}{S_{scDER,k}} \quad (1)$$

In the absence of DER, the ratio ρ tends to infinite, so that high values of ρ (e.g., > 200) conventionally indicate that the DER connection is viable. Conversely, low values of ρ (e.g., < 50) conventionally indicate the possible occurrence of problems that may require rules to limit the connection of DERs. This definition of the *SR* was used as a rule of thumb in early studies and does not appear anymore in the revision of the Standard [24], fostering more detailed studies that include the characteristics of the various types of grid-connected DERs.

On another side, starting from dynamic considerations, a stiffness coefficient β, expressed in MW/Hz, has been introduced to represent the inverse of the steady-state frequency deviation following a load change. Considering the effect of the combined inertia of all the grid-connected rotating machines and the automatic control action of the primary frequency controllers in response to frequency deviations, the stiffness coefficient is defined as [25]:

$$\beta = \frac{1}{R_{eq}} + D \quad (2)$$

where the load-damping term D expresses the load change percentage over the frequency change percentage, and R_{eq} represents the composite speed regulation of the governors [26]. The stiffness coefficient is then used to define the *SR*, expressed in [Hz^{-1}], e.g., at node k:

$$SR_k = \frac{\beta_k}{P_{R,k}} \quad (3)$$

To understand the numerical values of *SR*, the maximum frequency reduction in normal operating conditions is considered, as defined in many national regulations (e.g., 0.2 Hz or 0.25 Hz, also depending on the nominal frequency), then the lower limit of the stiffness ratio has been conventionally set to $SR_{min} = 5\ Hz^{-1}$ or $SR_{min} = 4\ Hz^{-1}$.

2.4. Sources of grid weakness

2.4.1. X/R and R/X ratios

The grid weakness typically depends on the SCR capability of the grid, which is based on the grid impedance value. At the point of interconnection of RES with the utility grid, the SCR is used as an indicator of grid strength. The SCR is thus linked to the bus impedance matrix of the networks. A lower grid impedance corresponds to a higher SCR, reflecting a stiff and strong grid, capable of supporting high-RES integration. Conversely, a higher grid impedance indicates a low SCR, signifying a less stable and weaker grid prone to stability issues (with voltage magnitude highly sensitive to changes in active and reactive power at POC [11]). Weak grids are typically characterised by a low SCR value, for example below 10 [27]. Along with SCR, the *X/R* ratio in a power system is also crucial for understanding the system's short-circuit behaviour, dynamic response, and overall grid robustness with respect to integrated IBRs [28]. A high *X/R* ratio common in transmission systems indicates that reactance dominates, resulting in higher peaks of fault currents with slower current decay during transients. This influences the design and operation of protection systems. On the other hand, distribution networks with a higher *R/X* ratio have lower fault currents that decay quickly but suffer from greater voltage variations and power losses, particularly with wide RES integration. Weak grids, characterised by high bus impedance and low short-circuit capacity, are more affected by *X/R* variations because they influence voltage regulation, oscillation damping, and the fault ride-through (FRT) capability of IBRs.

For wind farms connected to the distribution network, it is reported that higher *X/R* ratios lead to increased reactive power requirements and lower POC voltage due to dominant inductive reactance, whereas lower *X/R* ratios make the POC voltage more sensitive to active power fluctuations from wind generation, causing step-voltage variations and potential power quality issues [29]. This demonstrates that the *X/R* ratio of the network is crucial in affecting voltage sensitivity and reactive power demand in wind-integrated systems. Precisely modelling the *X/R* ratio in the bus impedance matrix is essential to predict stability margins and to develop effective grid-support control strategies [30]. Possible changes to the network configuration affect the numerical values of the bus impedance matrix entries and require recalculation of the results. Assessing how variations in the *X/R* ratio interact with the overall weakness of transmission and distribution grids, especially in systems with deep wind penetration and higher inverter integration, needs to be further explored. Recent research in this direction to assess grid robustness in terms of voltage stability has proposed introducing a complex SCR ratio to provide more detail on *X/R* ratios, as well as the non-unity power-factor operation of the inverters (overlooked in previous conventional SCR-based metrics) and the reactive power contribution of shunt filter capacitors [31].

2.4.2. Short-circuit level

The change in the short-circuit level after adding IBR is an aspect for which there is a key difference between transmission and distribution systems. In transmission systems, large-scale integration of IBRs reduces the grid fault level, due to the replacement of SGs with IBRs having less short-circuit capacity. Conversely, in distribution systems (originally with no generation system) the addition of IBR increases the short-circuit level at the POC in distribution systems, particularly in weak grids [32]. Besides the available fault level, the grid voltage at the POC and the feeder length constraint significantly influence the maximum power injection from DERs due to the voltage stability limits [33]. In addition, regarding sensitivity analysis, reactive power injection and grid characteristics (whether resistive or inductive) greatly influence the allowable DER power, with weaker grids exhibiting greater sensitivity and a higher risk of POC voltage exceeding operational limits.

2.4.3. Frequency-related aspects

The proliferation of IBRs into weak bulk systems significantly impacts frequency stability, leading to challenges in maintaining power system synchronisation and protection systems coordination, both in distribution networks and microgrids [34]. In some cases, the system's low inertia, resulting from the small number of SGs, poses a serious concern for network frequency variations and stability as RES penetration increases [35]. In an inverter-dominated grid, frequency stability is more significantly impacted than voltage stability: for example, there could be a disconnection of PV systems in the event of faults, causing a significant imbalance between generation and load [36] and hence requiring under-frequency load shedding, especially when the fault clearing time is relatively long [37]. However, load shedding may increase system voltage, causing overvoltage at some nodes where the PV system remains connected. This, in turn can trigger further PV system disconnections due to overvoltage protection.

Also, when PV penetration reaches a specific limit, the phase difference between some buses frequently becomes larger, which makes it difficult for the grid to maintain synchronisation, increasing the grid weakness. Moreover, deep penetration of non-synchronous RES can lead to high rate of change of frequency (RoCoF) (which refers to how fast the power system frequency changes in response to disturbances) and abnormal frequency deviations, which in weak grids increase the challenges for frequency control and protection [38].

Table 4 highlights key issues in integrating large-scale RES into weak power grids.

Table 4
Issues related to large-scale RES integration in weaker grids.

Issues	Description	Consequences
Inertial support	Lack of enough rotational inertia in RES and less SG.	Grid frequency instability caused by high frequency deviations.
Frequency controllability	Absence of primary frequency control support in RES.	Reduced grid frequency recovery and risk of losing synchronism.
Synchronisation	Difficulty in maintaining frequency alignment with the grid due to deep penetration of IBRs.	System islanding and blackout.
Increased RoCoF level	High chances of frequency deviations during disturbances due to uncertainty in RES power output.	Protection relays unnecessarily trip and degrade grid strength.
Reducing fault level	Low SCR capability of IBRs and maintaining operation during a fault.	Inverters tripping due to unstable system dynamics.

3. Conceptualising network weakness across voltage levels

3.1. Transmission networks

3.1.1. Frequency response and inertia

The phase-out of traditional power plants equipped with SGs and their replacement with inverter-based RES are affecting the transmission networks. An unsatisfactory level of inertia makes some HV networks more susceptible to frequency fluctuations and instability. In particular, the inertial support decreases, turning to an increase in the RoCoF following a contingency event [39,40]. For instance, perturbations in wind power drive the network closer to instability linked to increased frequency sensitivity, as the system loses its ability to withstand small power imbalances because the perturbations decrease the system's kinetic energy (inertial), thereby impacting the RoCoF [41]. Alongside a higher RoCoF, the frequency nadir (the lowest point the frequency reaches after a contingency event) may decrease due to the increased penetration of RES because of less immediate response and physical inertia support [42]. Sufficient inertial support, provided by SGs, slows down the RoCoF and leaves enough time for primary frequency control action. In contrast, with RES integration, the system experiences frequency fluctuations due to the absence of adequate inertial support during fault conditions [43], also causing unnecessary tripping of protection relays [44]. Fig. 3 shows a conceptual representation of the frequency response for high-inertia and low-inertia systems, highlighting RoCoF and the frequency nadir after load/contingency events.

Another significant challenge in the integration of RES in the transmission network is related to the maximum allowable RES penetration limit. This limit for RES mainly depends on the operational characteristics and assumptions of the power system based on replaced SGs, with a decline in inertia, grid strength, and reactive power support of the system. In a weak grid (low SCR), the penetration level allowed for RES integration may be substantially lower, whereas strong grids (high SCR) may accommodate deeper RES penetration levels. A specific point is the definition of the penetration level, typically considered as a scalar term. However, the scalar term can refer to increased RES penetration at a single node, within a group of nodes, or across the entire system. Due to the impact of any change in a node on the operation of the whole system, sensitivity analyses or small changes are more appropriate for addressing a single node, whereas larger variations across multiple nodes can better represent possible scenarios of RES evolution.

Moreover, operational and planning challenges handled by TSOs in the large-scale integration of RES refer to the optimal location of RES in the transmission system and their variable production [45]. Therefore, transmission system upgrades are required in design and operation approaches, as well as in regulation [46], along with the addition of new transmission lines to support the large-scale integration of RES [47].

Additionally, a power system network with spatially distributed RES generation encounters fluctuations in variable generation feed-in across the network, causing simultaneous disturbances (noise-like) from multiple locations. An important question is the extent to which the induced fluctuations propagate through the network and what measures can be taken to mitigate their impact on the rest of the system. Network parameters like transmission line reactance can attenuate the magnitude of RoCoF fluctuations, thereby limiting the spatial propagation of disturbances and confining their impact to local areas, as shown in wind integrated networks [41].

3.1.2. Determination of the weak areas

Identifying the system's weak areas helps recognise where to implement structural modifications or specific operational actions. In early transmission networks, the identification of the weak areas of the network was carried out with steady-state and dynamic methods. From the steady-state standpoint, weak nodes and areas were identified by searching for the worst load increase direction by using indicators based on the sensitivity of the total reactive generation with respect to the total load increase [48]. Moreover, changes in active power transferred to a weak area and the apparent conductance seen by the bus, detected by Phasor Measurements Units (PMUs) were used to establish a voltage stability indicator [49]. In these cases, frequency-related aspects and inertia were not addressed.

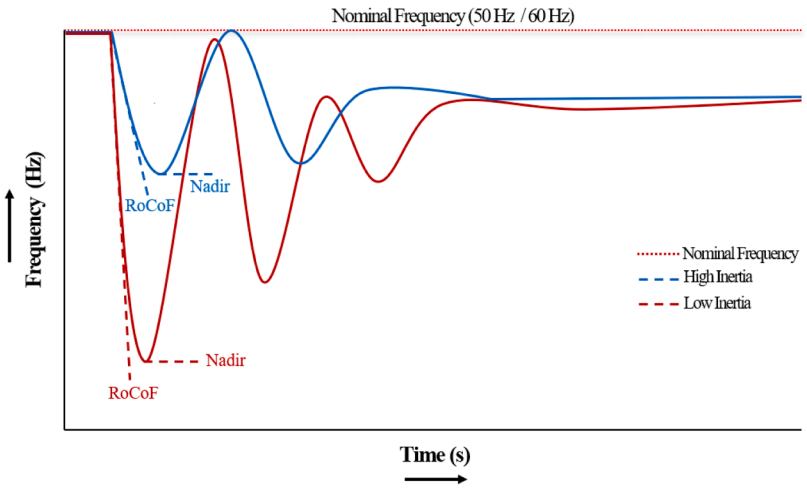

Fig. 3. Representation of frequency response for high-inertia and low-inertia systems.

The increased proliferation of RES with IBRs requires the identification of weak areas considering inertia estimation, which can be achieved by utilising offline methods based on system static and dynamic models, as well as online methods, based on PMUs, to gain real-time system awareness [10]. The identification of weak areas in the power system can be carried out offline, based on the local equivalent effect of an inertia index, ranking the nodes and grouping them into coherent frequency areas [50]. Taking into account voltage and frequency dynamics, a disturbance-based inertia estimation method determines the change in power after a disturbance [51]. Conversely, online methods that gather information from PMUs can be effective in estimating the real-time inertia constant of the power system [52,53].

3.2. MV distribution networks

Radial MV networks face particular challenges due to the growing penetration of DG and RES, like residential PV and small wind turbines. These generation sources are mainly connected to the main grid through a power electronic interface, which complicates the system and may contribute to worse frequency deviations [54]. According to the IEEE-1547 standard for the interconnection and interoperability of DERs with electric power systems, the allowable frequency deviations for grid-connected inverters are 0.8 % for over-frequency and 1 % for under-frequency variations [55].

High intermittent RES (in particular PV) integration affects the MV system's operational efficiency due to reverse power flows that disrupt the network's performance [56]. It is also argued that integrating multiple DG sources with different short-circuit characteristics into MV distribution systems makes it unpredictable for protection devices to accurately detect faults, leading to loss of protection coordination and potentially resulting in lack of supply [12,57]. Therefore, it stresses the need for fault diagnosis, fault location, and system restoration in active distribution networks due to bidirectional power flow, particularly with deep DG penetration and large-scale load integration [58].

Furthermore, in MV distribution networks, the high integration of DERs and IBRs can significantly affect voltages. Distribution feeders are characterised by higher R/X ratio with respect to transmission systems, making them highly sensitive to changes in active and reactive power, which can influence the feeder voltage profile [59]. For example, installing a PV system at any node of a radial distribution feeder may lead to increased voltage variations due to changes in PV power injection. Fig. 4 shows a conceptual representation of such a situation in a radial distribution feeder with PV connected to a node. During periods of low demand and high PV generation, the voltage along the feeder can rise, potentially causing overvoltage conditions that can reduce system operational efficiency and may damage the electrical equipment in the grid and at consumer premises [59,60]. Such impacts are more pronounced in weak grid conditions due to low short-circuit capacity, thereby requiring advanced voltage control strategies, reactive power support, and enhanced distribution management system (DMS)[5] [61].

A peculiarity of MV distribution networks is their potential for reconfiguration under normal or emergency conditions. Under normal conditions, reconfiguration can be applied to optimise specific objectives, either individually or in a multi-objective framework. During emergencies, network reconfiguration and the deployment of mobile generation resources are typical strategies considered for assisting the service restoration process. Limits on node short-circuit currents are typically considered constraints in optimisation problems to avoid creating configurations in which fault occurrence would not be adequately protected in the system. With increased connection of DG units to MV networks, node short-circuit currents are increasing, making the margins to meet the corresponding limits progressively smaller. Even though not consistently highlighted in the literature dedicated to MV distribution system reconfiguration, with constraints mainly set on bus voltages, branch currents and number of switching operations [62], the short-circuit limits will have a greater impact in future studies.

3.3. LV distribution networks

LV networks, being closest to the end-user's premises, are witnessing a major surge in prosumers' activities, with end-users not only consuming but also generating electricity. The penetration of DERs and IBRs into LV networks creates a considerable level of unpredictability and variation in power flows, which in turn affects the frequency controllers. The integration of rooftop PVs into LV feeders creates voltage imbalance and power quality issues [14]. Also, as rooftop PV systems are privately owned and DSOs have limited control over the integration of these PV systems into LV feeders, this further creates uncertainty in the power flows and their stochastic assessment with the distribution grid. Therefore, the efficient and effective management of high PV diffusion in LV distribution networks necessitates the development of proper mitigation strategies due to high R/X ratio (which directly affects the voltage profile), and low power quality [13].

Some other critical challenges faced by LV networks are similar to the MV ones: reverse power flows, reduction in fault current level, and protection system coordination. Conventional protection relays typically operate at higher fault currents due to the high current flowing in the lines. However, with the integration of IBRs, the current contribution in the power lines decreases, which may cause the protection scheme to fail or malfunction, thereby directly affecting system reliability [63]. In some situations, the absence of rotational support in MV systems can cause automatic under-frequency load shedding [64]. Large-scale PV integration in LV distribution networks in rural communities could adversely affect the protection system of LV networks [65], as the PV system's short-circuit contribution is higher under symmetrical fault conditions than in a system without PV integration. Additionally, the settings of overcurrent relays need to be revised to prevent the under-reach (blinding of protection or insensitivity), or over-reach (sympathetic tripping) problem in the relay protection scheme. Furthermore, the reverse power flow in power lines heading towards the MV/LV transformers compromises network stability [66]. Thus, deep penetration of IBRs and bidirectional power flow in LV networks require advanced control technologies to ensure secure power system operation and reliability.

Another key factor in MV-LV network interconnection is the hosting capacity of network. For instance, installing a PV at a specific node on the LV side can cause a voltage rise that affects other nodes. This may restrict further PV installations, especially when the initial node has already reached the overvoltage threshold [67]. In the same manner, if the PV installation at a particular node result in an overloading (current) situation, a new PV interconnection at the other node may increase the power flow in the network, leading to further overloading. Similarly, regarding the voltage limit on the MV side, installing a PV at a specific node means that adding more PVs at other MV nodes or on the LV side will further raise the voltage at that node, which is already at its limit. Consequently, the hosting capacity at other nodes becomes zero. If the constraint is due to overloading, no additional PV connections will be permitted, and the hosting capacity at all downstream nodes will be zero. Notably, the PV unit installed near the node at POC on the MV side can restrict all new PV connections throughout the network if the HV/MV transformer reaches its loading limit [67]. This discussion necessitates a clear understanding of the network's hosting capacity so that network operators can satisfy all constraints and fairly allocate hosting capacity among all participants (customers) willing to install PV

[5] The definition of DMS given by the IEEE Power and Energy Society is "a decision support system that is intended to assist the DSOs, engineers, technicians, managers, and other personnel in monitoring, controlling, and optimizing the performance of the electric distribution system without jeopardizing the safety of the field workforce and the general public and without jeopardizing the protection of electric distribution assets" (cited in [61]).

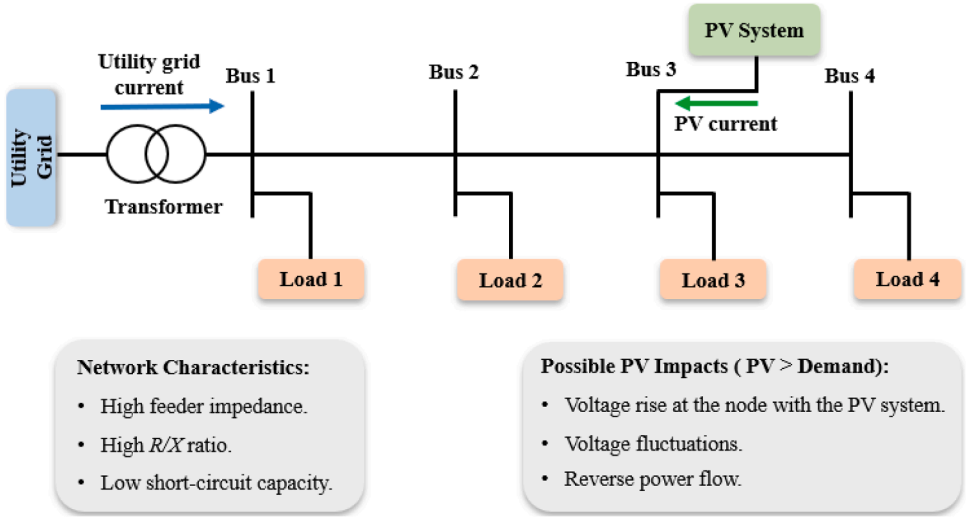

Fig. 4. Representation of a PV connected to a node in the feeder.

Table 5
Major differences across HV, MV, and LV networks.

Parameters	HV networks	MV networks	LV networks
Network type	Meshed	Ring / Weakly Meshed	Radial
DER/RES integration type	Large-scale PV / wind	Medium-scale RES / DG	Residential PV, energy storage systems (ESS), and electric vehicles
Frequency control scope	Transmission	Regional distribution grid	End users / Prosumers
Frequency control provision	Provided by large SGs	Mainly depending on the HV grid-side support	Virtual or often missing
Inertia	High	Medium to low	Very low
Frequency instability exposure	Low (except weak HV networks)	Moderate to high	Very high (particularly for the islanded scenario)
RoCoF sensitivity	Low	Medium	Very high
Grid weakness	Low (having high X/R ratio)	Moderate	High (having low X/R ratio)

connections. Clarifications on the definition of hosting capacity have been provided to identify the multi-faceted set of penetrations the network can sustain without being subject to any issues [68].

Table 5 illustrates the main differences in HV, MV, and LV networks. Table 6 indicates the main causes and potential solutions of specific issues. For MV and LV systems, frequency variations can also be caused by events occurring in the supply system at higher voltage. The table refers to local events and solutions linked to frequency variations.

4. Control and mitigation strategies

In an evolving power system paradigm driven by DERs and IBRs, the challenge of network weakness caused by decreasing inertia and system strength, along with low FRT capability, requires advanced control and mitigation strategies. These strategies should aim to reproduce the characteristics of a strong grid to improve operational performance and ensure continuous supply to end users. This section provides a thorough overview of different control and mitigation strategies, including their advantages and disadvantages.

4.1. Power system components

4.1.1. Synchronous compensators (SCs)

One practical approach is to incorporate synchronous compensators (also called synchronous condensers), which can offer rotational inertia support to the grid, improve short-circuit strength, and deliver continuous adjustable reactive power to stabilise the voltage profile [69]. SCs are generally synchronous machines that operate without a prime mover in steady-state conditions at a fixed speed, irrespective of the load. In high-inertia SCs, the additional inertia is provided by the addition of a flywheel. SCs are best suited for networks with high integration of power-electronic devices, for voltage control on long transmission lines, and for systems with a risk of islanding [70]. Moreover, SCs support the grid by actively damping frequency deviations during disturbances, due to the kinetic energy stored in their rotating mass, and facilitate the grid in enhancing the system's frequency response, particularly in low-inertia systems. For wind-based power plants coupled to the utility grid via a power-electronics-interfaced system that lacks inherent inertia, adding SCs, as rotating machines, can provide physical inertia, thereby improving frequency stability. For instance, in a high RES-based system dominated by wind turbine SCs exhibit satisfactory performance in enhancing system frequency stability and help in maintaining system synchronism under various operating conditions [71,72]. Concerning the technical and financial aspects of installing SCs in wind-dominated power grids, SCs improved system strength at the POC with wind plants while remaining economically feasible by reducing wind curtailment and generating revenue (from surplus energy sales and fuel cost savings) [73]. Furthermore, optimal SC allocation in transmission networks enhances SCR at the POC with RES [74]. Thus, system operators view SCs deployment as a strategy to meet minimum system strength criteria for integrating new RES [21]. They can also support the grid by reducing frequency oscillations during abnormal conditions and helping to keep the system synchronised across different operating scenarios. For weak grids with highly diffuse RES, properly locating and sizing SCs is crucial for providing frequency control support and increasing the system's inertial capacity [75].

However, SCs have some disadvantages including high operational and installation costs, mechanical losses, and the lack of self-starting torque (requiring auxiliary equipment) [9,76]. To overcome these limitations, power-electronic converters or battery ESS (BESS) can be used in combination with SCs to form a hybrid SC system (Fig. 5). This hybrid system can provide a range of advantages for the grid in the presence of intermittent RES, such as faster support for frequency and voltage regulation, reliable active and reactive power, improved power quality,

Table 6
Key issues across various network levels with causes and potential solutions.

Network type	Key issues	Main causes	Potential solutions
HV networks	Low regional inertia levels. Frequency fluctuations and instability. High RoCoF and low frequency nadir. Cascading failures and maintaining synchronism. Lack of protection system coordination.	Growing adoption of RES and replacement of SGs. Increasing grid impedance and low SCR. Low FRT capability of RES.	Grid-forming inverters with features of synthetic inertia. Synchronous compensators. HVDC system for inertial support. Fast frequency response schemes and ancillary services.
MV networks	Reduced rotational inertia support. Voltage and frequency deviations. Increase harmonic distortions. Transformer overloading. Power quality-related issues (e.g., voltage dips). Protection system malfunctions.	Increasing penetration of DERs and IBRs. High R/X ratio in distribution feeders. Intermittent and stochastic nature of RES. Lack of flexibility and coordination with TSOs.	Inertia emulation from DERs. Minimal level of inertia and FRT capability in contingency events. Energy storage mechanism for rapid response. Adaptive protection schemes. FACTS devices for power quality-related issues. Improved frameworks for TSO and DSO coordination.
LV networks	Voltage and frequency instability. Increasing reverse power flows in LV lines. Low FRT capability. Protection system malfunctions. Reduced hosting capacity of LV feeders for DER integration.	Increasing penetration of rooftop PV systems and power electronics converters. Variation in power flows and power imbalance. Reduced fault current level. High R/X ratio.	Grid-forming inverters with voltage and frequency support. DR programs and energy storage applications. Protection system upgrade and inclusion of adaptive protection strategies. LV feeder upgrade for increasing the hosting capacity of power electronics converters. Use of compensation devices for power quality improvement. Prosumers' participation in the energy market with flexible regulation policies.

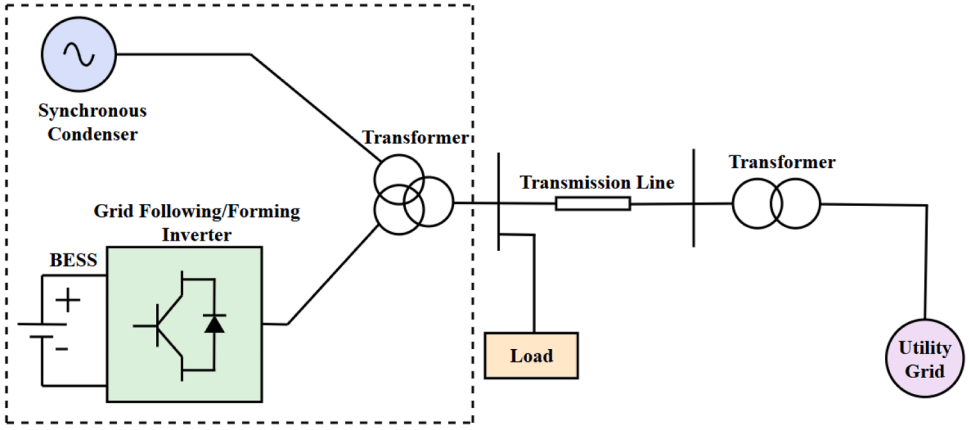

Fig. 5. Typical structure of a hybrid SC system connected with the utility grid (adapted from [76]).

Table 7
Key differences between SCs and power electronics devices.

Parameters	Synchronous compensators (SCs)	Power electronic devices
Inertia	Effectively provide real rotational inertia support.	Lack inherent inertia. Provide synthetic inertia through a control mechanism.
Response time	Generally, have a slower response time.	Provide a rapid response (milliseconds).
Short-circuit current	High short circuit current.	Limited short circuit current and fault current contribution.
Voltage support	Provide continuous voltage support (reactive power).	Provide dynamic voltage support and control.
RoCoF support	Actively damp frequency deviations and improve RoCoF.	Limited RoCoF control capability.
Stability	Effectively stabilise weak grids through reactive power and inertial support.	May affect grid stability, particularly in grids with a high number of power electronics devices.
Compatibility with weak grids	Compatible with weak grids, particularly with high RES integration.	May destabilise weak grids.

and enhanced grid stability [76].

Table 7 summarises some of the key differences between SCs and power-electronics devices.

4.1.2. *Virtual synchronous machine (VSM)*

The inclusion of a VSM (also called a virtual synchronous generator, VSG), which can emulate the dynamic behaviours of traditional SGs [77] through converter control, can help in mitigating the problems introduced by power electronics-based RES, providing synthetic inertia and ancillary services to the grid, thus improving grid stability [78]. VSM consists of three distinct components, which include a power electronic converter (comprising two power conversion stages, i.e., a DC-to-DC stage and DC-to-AC stage), an energy storage device (battery, flywheel, supercapacitor, etc.), and a control scheme that manages the exchange of power [79,80]. VSM integrates the well-known swing equation into its control scheme and droop characteristics, enabling it to actively respond to frequency fluctuations, as conventional SGs [8].

Previous studies extensively highlighted the effectiveness of VSMs. In low-inertia grids, VSMs play a major role in damping oscillations and restoring frequency during sudden grid disturbances [81,82]. Also, VSG stabilises the frequency oscillations and returns the frequency to its nominal value during power drops in power systems integrated with

DERs [80]. VSG, along with hybrid ESS, effectively handles the intermittency in PV system power output and attenuates the maximum frequency overshoot, resulting in frequency stability in a standalone microgrid system [83]. Similarly, VSG improves the RoCoF and provides frequency support in a converter-interfaced power system [84].

Hence, VSMs play a crucial role in maintaining frequency stability, providing inertia support, and damping oscillations in weak grids and power systems with high levels of RES integration to enhance system operational performance.

4.1.3. *Grid forming inverters (GFMIs)*

In an IBRs-dominated power system, the inverters are classified into two basic modes, which include GFMIs and grid following inverters (GFLIs). The GFMIs are typically based on a voltage-source inverter and control the output voltage because they can set their own voltage and frequency references and do not require a PLL. In contrast, the GFLIs need to synchronise their voltage and frequency with the utility grid through a PLL and normally behave as a current source inverter, injecting a controlled amount of active or reactive current into the system. For this reason, the GFLIs are also known as grid-feeding inverters. However, under weak grid conditions or when SGs are displaced, the PLLs in GFLIs experience stability issues because the grid's voltage and frequency references are insufficiently strong. In such situations, the condition of multi-frequency oscillation instability occurs more frequently [85].

Fig. 6 compares the equivalent circuit and control of GFMI and GFLI. GFMI has a voltage source with low series impedance (Fig. 6a), whereas GFLI has a current source with a high impedance in parallel (Fig. 6b) [86]. Table 8 highlights the key differences between GFMIs and GFLIs.

Unlike traditional converters, grid-forming technologies can mimic the behaviour of SGs to provide inertia response, support frequency during grid disturbances, and stabilise voltage [87]. For example, GFMIs equipped with advanced control systems can simultaneously provide both active and reactive power to the grid, thereby enhancing the system's operational stability and FRT capability. One of the significant advantages of GFMIs is their ability to transition between grid-connected and islanded modes smoothly [88], maintaining continuous synchronisation and providing a stable voltage source.

Table 8
Key differences between GFMIs and GFLIs.

Grid forming inverters (GFMIs)	Grid following inverters (GFLIs)
Based on a voltage source inverter and control the output voltage.	Based on the current source inverter and control on the output current.
Capable of forming its voltage waveform and self-synchronisation.	Depend on another source for synchronisation.
Provides both active and reactive power to the grid.	Supplies only active power to the grid. Reactive power supply depends on the grid requirements and the inverter's capability limits.
It is independent of the PLL.	Depends on PLLs and requires strong grid support. PLL is used to track the grid's phase angle in real time.
Capable of running on its own.	Incapable of running independently.
Capable of achieving 100 % RES penetration rate.	Incapable of achieving 100 % RES penetration rate.
Provide limited short circuit current support with respect to the SGs.	Limited FRT capability.
Capable of providing stable operation in weak grids.	Unstable in weak grids because of PLL instability.
Provides damping to frequency swings in a mixed system.	Aggravate frequency issues with increased penetration.

GFMIs can be operated in four distinct control mechanisms [89], which include droop-based (mimics the droop behaviour of SG), VSG-based (provides virtual inertia and damping), compensated generalised VSG-based (involves compensation techniques to strengthen system dynamic performance), and adaptive VSG-based GFMIs (involves adaptive control based on real-time grid impedance estimation to ensure consistent performance during varying grid conditions). The most widely used control strategy is droop-based GFMIs due to their reliability and simplicity [89]. GFMIs, in their droop-based operation,

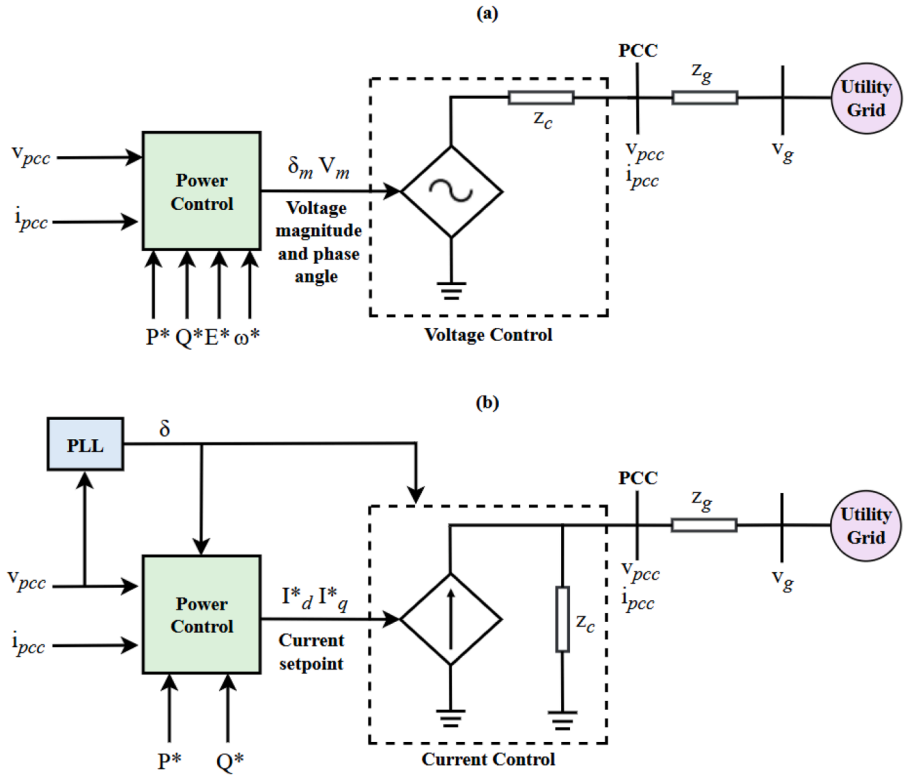

Fig. 6. Equivalent circuit and control of (a) GFMI and (b) GFLI (adapted from [86]).

actively adjust their output voltage and frequency in response to power imbalances (both active and reactive) and provide support to weak networks, operating in both grid-connected and islanded modes. GFMIs can behave like traditional SGs because of their ability to maintain grid frequency and voltage (droop control), making them key enablers for RES-dominated grids to address RES variability and intermittency [90]. Furthermore, in VSG operation mode, GFMIs can provide autonomous black-start capability after a power blackout [91]. In weak grid conditions, GFMIs maintain grid stability by providing a low effective source impedance through dynamic interaction between the POC voltage and the GFMI's internal voltage, thereby actively damping oscillations and enhancing system stability without the need for external control intervention [87].

Compared with GFLIs, GFMIs enhance the operational stability of weak grid systems by providing inertia and frequency support during disturbances [89,92]. Additionally, GFMIs provide a more seamless integration of RES with the grid, enhancing grid flexibility through their sophisticated control mechanisms that fulfil grid specifications, compared with GFLIs [93]. In HV and MV power networks with PV generation, GFMIs outperform GFLIs in improving network stability by providing synthetic inertia in response to instantaneous grid contingencies [94]. Likewise, for a microgrid-based system connected to the utility grid, GFMIs are more robust than GFLIs in response to disturbances, system behaviour, and changing operational conditions. This feature of GFMIs appears in a hybrid microgrid-based system (PV and ESS) connected to the grid under varying irradiance conditions, grid outages, load switching, and FRT capability [95]. Moreover, GFMI responds more quickly to disturbances and load changes by providing greater inertial support and active power control than GFLI [95]. Furthermore, during grid outages GFMI can operate the microgrid in islanded mode because it can independently generate voltage and frequency [95]. Also, GFMI demonstrated high FRT capability during a grid fault and remained connected to the grid by injecting controllable reactive power.

Moreover, GFMIs are best suited for hybrid energy systems and power networks with low inertia and weak grid conditions (low SCR) [92,96]. For example, in a hybrid wind-solar generation system under very weak grid conditions (SCR = 1.0), GFMI control provide robust, stable operation even at such a low SCR [97]. Similarly, GFMIs in PV-integrated MV networks can effectively control the PV system's active power, particularly under dynamic operating conditions, to maintain normal frequency limits and ensure stable operation [98].

4.1.4. Energy storage systems (ESS)

Some of the recommended ESS for grid applications and power networks with deep RES penetration include BESS, supercapacitor ESS, superconducting magnetic energy storage (SMES) systems, flywheels, pumped-hydro storage, compressed-air energy storage, gravitational energy storage, and hybrid ESS (a combination of multiple energy storage technologies) [99,100].

An ESS can serve as a viable option for managing the uncertainty of RES [100,101] and supporting grid stability [101,102]. Optimal placement of ESS at weak points in a network can improve the system's short-circuit strength. ESS can provide synthetic inertia and sustained primary/secondary reserves, creating a combined effect that reduces RoCoF sensitivity and results in a smaller frequency nadir during unexpected contingencies. Recent research introduces the energy-storage considered short circuit ratio (ECSCR), which accounts for how energy storage devices contribute to short-circuit power [103].

BESS typically consist of lead-acid, lithium-ion, sodium-sulphur, sodium-nickel-based, and rechargeable batteries [100]. In systems with wide diffusion of renewable energy, BESS provides a rapid response to active power imbalances [104]. It can absorb or supply active and reactive power instantaneously, thus providing effective voltage and frequency regulation [105]. Moreover, BESS injects fault current through inverters during grid faults, enhancing short-circuit capacity at critical buses and increasing local SCR to reduce weak-grid risks [103]. Super capacitors offer additional advantages over BESS due to their high efficiency, higher power density, greater charging and discharging capability, extended life cycle, and ability to operate over a wide temperature range [106,107]. Table 9 illustrates the comparison of different types of ESS utilised for a wide range of power system applications.

Furthermore, ESS can provide ancillary services to the grid, including fast frequency response (FFR), inertia emulation, voltage regulation, and power quality [108]. Given the fast time scale of frequency events, FFR services provided by ESS and IBRs can serve as a critical operational layer in low-inertia power systems. BESS can effectively control RoCoF within its limits and restore the steady-state frequency to normal operation following a disturbance [109]. Moreover, the optimal placement and control of BESS in low-inertia grids with wind power generation can provide voltage support and frequency stability after a sudden generation loss [110]. Using BESS and SMES systems in a low-inertia power grid with deep RES penetration can maintain system frequency-response adequacy and reduce under-frequency load shedding after contingencies [111]. In such situations, BESS can be used when frequency exceeds a specified threshold to provide supplementary inertia and primary frequency support. In contrast, SMES can be utilised when RoCoF exceeds a certain threshold to provide supplementary inertia [111].

Similarly, the optimal placement and sizing of BESS, given the deep penetration of RES and DG in transmission and distribution networks, can be used to provide frequency support and ancillary services. As an illustration, in the transmission networks optimal placement of BESS resulted in a minimum RoCoF during disturbances, improved the frequency nadir, and prevented the network from activating protective relays (under-frequency) [112]. Moreover, the optimal placement and

Table 9
Comparison of different types of ESS used in power system applications.

ESS type	Energy density	Power density	Response time	Suitability case	Power system application
BESS	High	Medium	Fast	Frequency stability and RoCoF improvement.	Can be utilised in transmission, distribution (HV/LV) and weak grid systems.
Supercapacitors	Low	High	Fast	Inertia emulation, power smoothing and RoCoF improvement.	Can be used in distribution networks and microgrids.
SMES	Low	High	Fast	Suitable for instantaneous frequency events.	Can be used in low-inertia systems.
Flywheel	Low	High	Fast	Synthetic inertia and frequency regulation.	Can be used in distribution networks and weak grids.
Pumped hydro storage	High	Low	Slow	System stability, inertia, and balancing demand and generation.	Can be used in transmission and distribution (MV) networks and for integrating intermittent RES sources.
Compressed air energy storage	High	Low	Slow	Long backup duration and peak shaving.	Useful for mitigating the intermittency of RES.
Hybrid ESS	Depends on ESS	Low to Medium	Fast	High frequency stability and RoCoF improvement.	Useful in RES dominated grids and low-inertia systems.

sizing of BESS in MV distribution systems with deep DG penetration can alleviate reverse power flows, reduce power losses, improve the voltage profile, achieve peak shaving, and reduce energy costs [113].

Addressing the issue of low inertia in power grids can be achieved by employing flywheel ESS, which provides virtual inertia, enhances frequency regulation, and reduces RoCoF due to its longer lifespan and higher power density, even when the SG is out of service [114]. Additionally, flywheel ESS can store energy during off-peak hours and discharge it during peak load demand, thereby reducing stress on the grid and providing energy cost savings.

Furthermore, supercapacitor-based ESS can be considered as an alternative option for smoothing power fluctuations in PV systems under varying temperature and irradiance conditions [115]. In some cases, supercapacitors can be used for inertia emulation control to exhibit the equivalent inertia characteristic of SG for frequency regulation in a weak grid system [116]. Also, optimal utilisation of supercapacitor ESS can be used to retain frequency stability [117] and improve power quality and system dynamic response [118] in large PV integrated systems and weak grid conditions following SG outage, either used alone or in a hybrid energy system. Likewise, the combination of battery-supercapacitor hybrid ESS in standalone PV systems can be used for rural electrification to reduce stress on BESS during severe loading conditions and PV output power fluctuations [119]. Fig. 7 indicates the role of ESS in the weak power system networks and grids, contributing to system stability and resilience.

4.1.5. *Advanced adaptive protection system*

As with the integration of IBRs and RES in power networks, the protection system faces a significant challenge and becomes much more complex and sensitive due to bidirectional power flow in lines. Any malfunction of the protective devices will have a dramatic impact on the system and may result in a complete shutdown of the power system. In distribution systems, conventional protection devices typically operate with predefined settings and measure a unidirectional power flow from the utility grid to the load, which are no longer effective and efficient in today's systems, which include a mix of generation and other resources [120]. Therefore, to overcome this challenge, an advanced adaptive protection system is the best solution to ensure the reliability and stability of the power system with deep IBRs and RES penetration.

The adaptability of a protection system can be described as "the ability of a protection scheme to adjust itself to changing grid conditions." In weak grid scenarios, where high RoCoF can cause unnecessary tripping of the protective relays, an adaptive protection strategy can prevent or delay this tripping of DG and inverters.

Furthermore, adaptive protection schemes are crucial for effective network protection and changing short-circuit contributions and R/X characteristics, especially with increased DER integration. An adaptive protection strategy dynamically adjusts relay settings, reconfigures protection zones, or uses communication-based logic to reliably detect and clear faults, even under low short circuit current, converter fault currents, and evolving network topologies [121]. In weak grids, this prevents protective relays from maloperation and islanding, thereby protecting system stability. Research shows that adaptive overcurrent, impedance-based, and communication-assisted schemes effectively manage high DER levels [122].

To develop advanced adaptive protection for power systems in the presence of IBRs and DERs, researchers have developed various techniques and methodologies. Some representative techniques reported in the literature are summarised as follows:

- A simple online relay-coordination-based adaptive protection scheme that does not rely on extensive communication infrastructure has proven capable of adjusting relay settings as DER penetration varies [123]. Testing on an IEEE-14 bus system (low-voltage side) with varying DER integration and a conventional generator confirms its enhanced adaptability to changing network conditions and reliable fault detection.
- Adjusting relay configurations and settings rather than replacing protection hardware is a cost-effective way to implement adaptive protection in transmission systems, particularly as RES penetration increases [124].
- Integrating both centralised and decentralised communication in adaptive protection systems improves relay coordination and helps identify high-impedance faults that traditional overcurrent protections often fail to detect [125]. This is because high fault impedance reduces the magnitude of the fault current, making it almost impossible for conventional overcurrent relays to identify the fault.
- Using Thévenin-equivalent-based adaptive protection provides a practical method for coordinating overcurrent relays in distributed networks with uncertain DG output [126]. It offers flexibility across different configurations (radial, mesh, and ring) without relying on communication systems.

Thus, an advanced adaptive protection system can play a vital role in

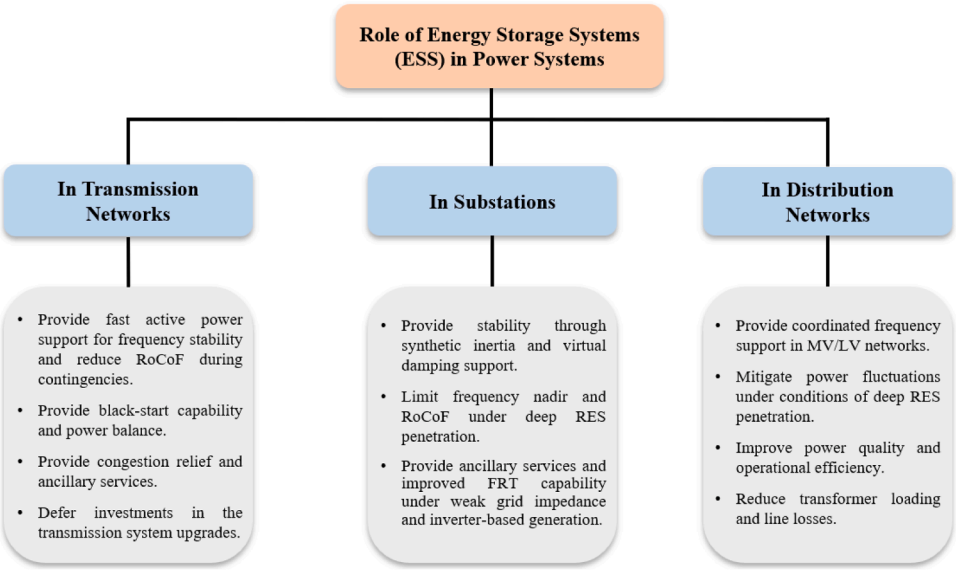

Fig. 7. Role of ESS in weak power system networks and grids.

today's DERs and IBRs-dominated low-inertia power system by dynamically adjusting to changes in system operational conditions to ensure reliable fault diagnosis, maintain effective coordination of protection devices, preserve system stability and reliability, and prevent unnecessary system tripping. Moreover, it can also contribute to the modernisation of the power system and improve its resilience to contingency events.

4.1.6. Flexible AC transmission systems (FACTS) and HVDC systems

Strong DER integration in power systems requires operational flexibility in reactive power and voltage support, which can be provided by FACTS and phase-shifting transformers [127]. FACTS devices can control power flow in power lines by adjusting line impedance, voltage magnitude, and phase angle, thereby increasing line loading capacity, operational cost savings, and alleviating congestion. FACTS devices such as static var compensators (SVC) and static synchronous compensators (STATCOM) provide rapid reactive power compensation during disturbances [128].

Similarly, given the vulnerabilities identified in the grid, HVDC transmission offers a promising solution for reinforcement. HVDC, especially based on voltage-source-converter (VSC), has proven being effective in strengthening low-inertia renewable-dense transmission networks. VSC—HVDC can independently manage both active and reactive power, helping to stabilise voltage, reduce oscillations, and enhance transient and frequency stability in weak AC grids [129]. For instance, VSC—HVDC links can rapidly suppress voltage fluctuations by providing reactive support. Their quick active power adjustments enable fast frequency response, functioning as a "virtual inertia" source by shifting power to the weak regions, thus mitigating low-inertia frequency issues [129]. Furthermore, HVDC links can segment stressed synchronous AC systems into asynchronous zones, namely DC segmentation, by reducing the risk to widespread oscillations [130]. HVDC can enable frequency control and reserve sharing across regions, providing backup during outages and offering economic benefits through optimised reserve utilisation [131]. These potential capabilities make HVDC systems a strategic solution to keep the RES-rich bulk systems properly operating also in the presence of high-impact events.

4.2. Grid services

4.2.1. Fast frequency response (FFR) services

FFR in the power system domain refers to the rapid delivery or absorption of active power to balance the mismatch between power supply and demand. Also, FFR aims to stabilise the system frequency immediately after a major disturbance (within milliseconds) [132,133]. FFR services work in conjunction with power system inertia to control frequency in response to unexpected contingency events [134]. However, as discussed, the RES-rich power grid lacks the inherent inertia. It therefore demands sophisticated FFR services to dampen frequency deviations, respond promptly to system disturbances, and mitigate higher RoCoF in such a low-inertia power system. Fig. 8 shows how the utility grid frequency is controlled over time in response to system disturbances across different control layers.

FFR is a service that can be provided by recently developed technology such as IBRs (wind turbines and PV), BESS, and demand-side resources, combined with an energy management system [134]. For instance, the role of FFR from IBR is crucial for controlling frequency and preventing cascading failures in low-inertia systems [135,136]. Additionally, ESS can be used as a viable solution for providing FFR services. Nevertheless, the high cost of ESS remains a significant obstacle to its broader application in the power system [137].

FFR can be utilised to enhance system frequency control in low-inertia systems, considering the penetration level of non-SGs. For example, FFR can promptly detect frequency issues in low-inertia networks, ensuring the system frequency remains within limits by keeping the frequency nadir and RoCoF at desired levels and reducing the system's reserve capacity, thereby contributing to operational cost savings [138]. Moreover, PV plants can be utilised as an optimal solution for FFR in a low-inertia power grid based on the de-loaded mode (operating below the maximum power point) to provide a reserve capacity that can be rapidly deployed as FFR during frequency instability to enhance system inertial response [139].

Similarly, a coordinated hybrid control strategy for a wind turbine generator and a BESS can provide high-performance FFR across all wind speeds, thereby enhancing AC system frequency stability and extending battery life for long-term operational applications [140]. Moreover, hierarchical online control scheme to optimally coordinate and dispatch deferrable loads (an electrical load that is not necessarily to be powered at a specific time but can be shifted to a later time when adequate power is available within a specific time range) and DERs in a distribution network to act as "virtual power plant" can be utilised for providing FFR ancillary services for the bulk power system in case of frequency events [141,142].

Fig. 9 illustrates the FFR mechanism in a low-inertia power system, comprising frequency disturbance detection, immediate response activation, and frequency stabilisation and recovery.

4.2.2. Efficient DR programs

A DR program is one of the categories of demand side management (DSM) techniques, which has two further types: (i) Price-based DR, and

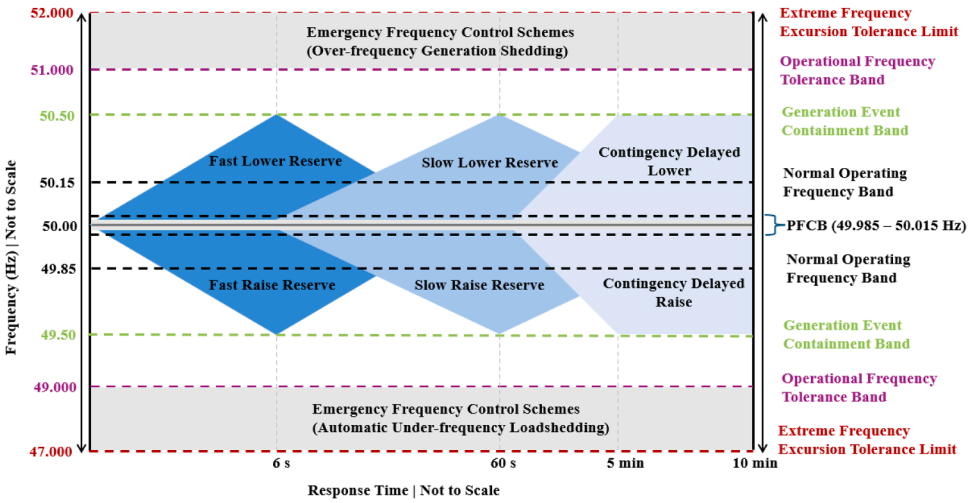

Fig. 8. Frequency control arrangements for contingency events over time (adapted from [134]). PFCB is the Primary Frequency Control Band.

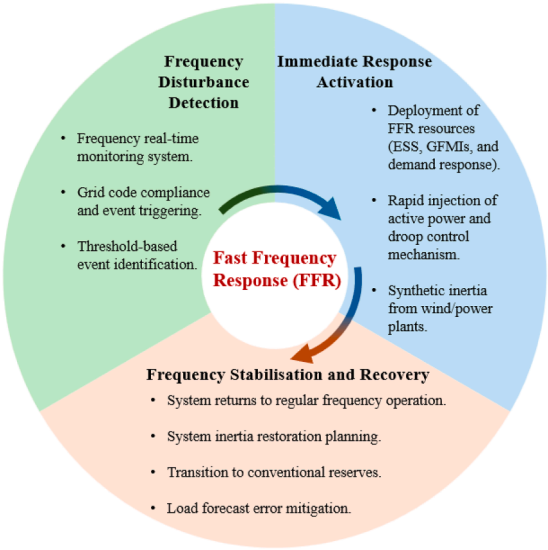

Fig. 9. FFR mechanism in a low-inertia power system.

(ii) Incentive-based DR [143,144]. Price-based DR involves various tariff structures that vary with electricity usage across periods and seasons. In contrast, incentive-based DR provides consumers with time-varying or fixed benefits rather than saving on the electricity bill. DR is considered a first option for power system frequency control, reducing power system spinning reserves and operational costs [145].

At the market level, efficient DR programs schemes, and aggregated flexible loads provide new pathways to buffer against network weakness by efficiently reducing demand during disturbance, controlling system-wide frequency, and ensuring energy balancing. For instance, in a multi-area power system, a decentralised DR combined with a wind power plant improves the system's frequency stability by reducing peak frequency excursions (frequency nadir) even under severe wind power fluctuations [146]. Similarly, a framework for frequency control in smart power grids can be implemented using DR and BESS through a transactive control system, which can improve the grid's steady-state and transient response to sudden perturbations in supply and demand balance by sending electricity pricing signals to the end-users [147]. Moreover, DR is the most cost-effective way to reduce high RoCoF and mitigate frequency regulation in PV-dominated power systems by managing controllable loads [148]. DR programs also encourage consumer participation in active distribution networks by adjusting their load patterns (flexible loads) in response to system uncertainties and real-time pricing signals from the DSO to maximise profits and improve distribution system performance [149]. An incentive-based DR program combined with BES can be utilised for frequency stability in a low-inertia isolated system via a direct load control mechanism under varying load and generation scenarios [150]. Similarly, DR programs are considered an efficient strategy for providing network congestion relief in the practical LV distribution networks [151].

To summarise and evaluate the control and mitigation strategies discussed for low-inertia power systems, Table 10 presents a comparative evaluation that can serve as a guideline for identifying suitable control strategies to cover evolving needs and system requirements.

5. TSO-DSO coordination

The widespread adoption of DERs, RES, and flexible demand at the distribution level has greatly changed the traditional hierarchy of the power system. Historically, the TSO role has been central to ensuring system reliability, balancing supply and demand, generating revenue, and providing ancillary services at the transmission level. In contrast, DSOs mainly focused on delivering secure power to end users, managing passive distribution networks, and ensuring customer satisfaction. However, with the decentralisation of power systems and paradigm shift of distribution networks from passive to active nature due to integration of a mix of resources, the DSO can now perform tasks that can significantly affect frequency, voltage, reserve capacity, and stability of the overall power system. This necessitates enhanced coordination between TSO and DSO to ensure widespread system reliability and flexibility, while efficiently utilising available resources. Fig. 10 presents a schematic representation of enhanced TSO-DSO coordination.

The coordination between TSO and DSO becomes essential to address operational issues such as congestion management, frequency regulation, and voltage stability, which can no longer be managed only at the transmission system level [152]. For example, DSOs have greater influence over flexibility resources, such as distributed storage systems, electric vehicles, and demand response, which can assist system-wide balancing when coordinated with the TSO. Similarly, DSOs need access to transmission-level options to ensure that local distribution constraints are met. Congestions can be effectively managed through the coordination of TSO and DSO, utilising a two-stage operational planning approach based on day-ahead and real-time market operation [153]. In this approach, day-ahead planning can be vital in forecasting load and

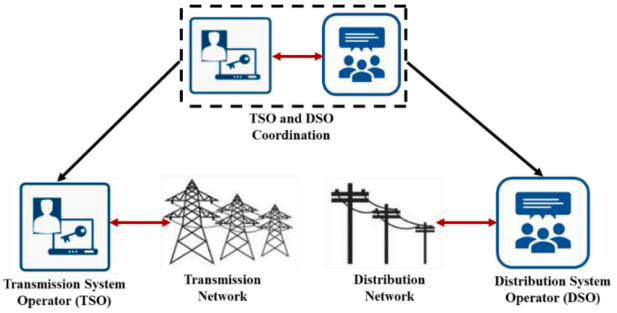

Fig. 10. Schematic representation of TSO-DSO coordination.

Table 10
Comparative evaluation of control and mitigation strategies in low-inertia systems.

Control Strategy	Frequency stability	RoCoF mitigation	Virtual inertia	Ancillary services	Short circuit current contribution	Weak grid suitability	Scalability (HV/MV/LV)
Synchronous compensators	✓	✓	✓	✓	✓	✓	LV (limited)
Virtual synchronous machine	✓	✓	✓	✓	×	✓	✓
Grid-forming inverters	✓	✓	✓	✓	✓	✓	✓
Energy storage system	✓	✓	✓	✓	✓	✓	✓
Advanced adaptive protection	✓	✓	×	×	×	✓	✓
FACTS devices	×	×	×	✓	✓	✓	LV (limited)
Fast frequency response	✓	✓	✓	✓	×	✓	✓
Demand response	✓	✓	×	✓	×	✓	✓

RES generation scheduling for the next day to optimise the generation-load balance, minimise cost, and maintain grid stability. In real-time market operations based on day-ahead planning, TSO-DSO coordination can handle power system operations through proper market mechanisms [153]. For frequency control, the DSO's aggregated modelling of DERs at the distribution level can be effective for the TSO to understand the frequency response of the distribution system and provide the necessary frequency support. This approach can be effective considering an aggregated model of DERs and load in the distribution system as a single equivalent VSM with the power-frequency characteristics of the SG for frequency regulation [154]. A decentralised coordination between TSO and DSO for deploying and scheduling optimal reactive power exchanges includes sharing reactive power information across different time frames during operational planning [155].

Building on these principles, a practical TSO-DSO coordination framework could be implemented as a layered, interactive architecture system that relies on hierarchical decision-making and decentralised execution at the distribution level [156]. The TSO would establish system-wide operational boundaries, such as voltage limits, power exchange capacities, and congestion thresholds at the transmission–distribution interface. Meanwhile, the DSO would be empowered to dispatch aggregated DER flexibility efficiently within these set boundaries, using local control schemes, optimisation methods, or market-based mechanisms. DSOs can then participate in the electricity market and receive payment for the energy supplied to the transmission system [156].

However, such effective TSO-DSO coordination in a decentralised energy system is constrained by structural, regulatory, and technical gaps [157]. Moreover, another important challenge in TSO-DSO coordination is the lack of detailed modelling of transmission and distribution networks. Existing techniques struggle to accurately model distribution networks within the transmission network's operational framework due to simplified power-flow representations and scalability challenges in optimisation-based models, especially when incorporating network-controlled assets (such as OLTCs) and numerous DERs [15]. In addition, most studies model MV networks while overlooking their interactions with LV networks, underscoring the importance of MV-LV interactions for comprehensive aggregate modelling of distribution networks [15,67]. Due to the limited observability of LV networks for network operators, they are often regarded as a black box within the power system, unlike transmission networks. Therefore, incorporating LV networks into the effective operational planning of power systems is of particular interest, as most decentralised generation and electrification will occur at the LV level [158]. Along with this, the future research activity is proceeding in different directions. The changing types of devices connected to transmission and distribution systems require new investigations into how to exploit advanced technologies to develop more effective mitigation actions in the event of network issues. In fact, DSOs lack sufficient operational measurement data to improve power system observability, attributed to technical limitations associated with legacy infrastructure (older grid systems), organisational barriers related to a lack of DSOs awareness and coordination challenges among stakeholders, regulatory requirements regarding data governance, financial investment constraints, and a shortage of skilled personnel required to implement and manage advanced monitoring systems [158].

This makes it difficult to detect and identify real-time violations of network constraints, hindering grid planning and operation. It also emphasises the need for standardised real-time data-sharing platforms that integrate measurements from PMUs at the transmission level, along with advanced metering infrastructure and DMS at the distribution level. Additionally, improved interoperability of devices, especially protection systems, is essential to prevent uncoordinated operations and mutual interference. This is crucial to reduce the risk of system de-energisation during contingencies, which could affect areas larger than necessary.

6. Conclusions

The conceptual views and discussions presented in this paper have highlighted the weaknesses of power system networks, particularly in low-inertia systems highly dominated by renewable energy and inverter-based resources. The article first analysed and identified the root challenges and technical issues that the system faces, due to the progressively higher integration of these resources in the power system infrastructure, including declining rotational inertia support, high frequency deviations, voltage instability, low short-circuit ratio, high rate of change of frequency, reverse power flows, inability to maintain synchronism, low fault ride-through capability, and weakened protection system coordination. Then, the article has presented effective mitigation and control strategies ranging from traditional approaches like synchronous compensators, virtual synchronous machines, and energy storage systems to advanced solutions such as the inclusion of grid forming inverters instead of grid following inverters, advanced adaptive protection scheme, fast frequency response services, demand response, and FACTS devices and HVDC systems.

Moreover, the literature review reveals that numerous structural and operational factors, such as hosting capacity, grid integration of local generation and network reconfiguration, influence the strength or weakness of networks. Also, there are relevant differences between transmission and distribution systems due to the nature of the network impedances and short-circuit ratio. In transmission systems, frequency variations are mostly of a global nature, depending on system inertia, as well as voltage variations linked to reactive power support. In distribution systems, voltage and frequency variations are more influenced by local voltage and frequency perturbations, along with reverse power flows.

Additionally, from a regulatory point of view, the main directions are the definition of grid services that involve a larger set of providers, including demand-side resources and storage, and the standardisation of grid connection requirements for DERs, along with consideration of the coordination among the protection and control systems.

Finally, controlling and mitigating network weaknesses in renewable-rich and DER-dominated power systems requires coordinated planning at a scale beyond current TSO-DSO interactions and effective multi-level system modelling. Future research that supports TSO-DSO coordination will provide considerable benefits to the integration of procedures, practices, and tools to improve the operational performance of interconnected energy systems.

CRediT authorship contribution statement

Izhar Us Salam: Writing – review & editing, Writing – original draft, Validation, Methodology, Investigation, Conceptualization. **Andrea Mazza:** Writing – review & editing, Writing – original draft, Validation, Methodology, Investigation, Conceptualization. **Gianfranco Chicco:** Writing – review & editing, Writing – original draft, Validation, Methodology, Investigation, Conceptualization.

Declaration of competing interest

The authors declare that they have no known competing financial interests or personal relationships that could have appeared to influence the work reported in this paper.

Data availability

No data was used for the research described in the article.

References

[1] World Nuclear Association, World energy needs and nuclear power. https://world-nuclear.org/information-library/current-and-future-generation/world-energy-needs-and-nuclear-power, 2025 (accessed March 18, 2026).

[2] IEA, World energy outlook 2023. https://iea.blob.core.windows.net/assets/ed1e4c42-5726-4269-b801-97b3d32e117c/WorldEnergyOutlook2023.pdf.

[3] E. Hakan, D. Van Hertem, Comparison of HVAC and HVDC technologies, in: D. Van Hertem, O. Gomis-Bellmunt, J. Liang (Eds.), HVDC Grids: For Offshore and Supergrid of the Future, IEEE Press, 2016, pp. 79–96, https://doi.org/10.1002/9781119115243.ch4.

[4] A. Ulbig, T.S. Borsche, G. Andersson, Impact of low rotational inertia on power system stability and operation, in: IFAC Proceedings 47, 2014, pp. 7290–7297, https://doi.org/10.3182/20140824-6-ZA-1003.02615.

[5] Z. Gao, Study on frequency stability control strategies for microgrid based on hybrid renewable energy, Sci. Technol. Energy Trans. (STET) (2024) 79, https://doi.org/10.2516/stet/2024047.

[6] IEEE, IEEE Guide For Planning DC Links Terminating At AC Locations Having Low Short-Circuit capacities, IEEE Std 1204-1997, IEEE, Piscataway, NJ, USA, 1997. https://ieeexplore.ieee.org/document/653230.

[7] M.O. Qays, I. Ahmad, D. Habibi, A. Aziz, T. Mahmoud, System strength shortfall challenges for renewable energy-based power systems: a review, Renew. Sustain. Energy Rev. 183 (2023), https://doi.org/10.1016/j.rser.2023.113447.

[8] P. Moore, O.A. Alimi, A. Abu-Siada, A.A. Au, A review of system strength and inertia in renewable-energy-dominated grids: challenges, sustainability, and solutions, Challenges 16 (2025) 12, https://doi.org/10.3390/CHALLE16010012.

[9] A. Smahi, S. Makhloufi, The power grid inertia with high renewable energy sources integration: a comprehensive review, J. Eng. 2025 (2025) 7975311, https://doi.org/10.1155/JE/7975311.

[10] A. Mehrzad, M. Darmiani, S.H. Rouhani, C.L. Su, M. Askari Sepestanaki, E. Mofidipour, A. Monti, A. Anvari-Moghaddam, Inertia in renewable power systems: a review of estimation methods and practical implementation, Renew. Sustain. Energy Rev. 226 (2025) 116246, https://doi.org/10.1016/J.RSER.2025.116246.

[11] M.G. Dozein, P. Mancarella, T.K. Saha, R. Yan, System strength and weak grids: fundamentals, challenges, and mitigation strategies, in: Australasian Universities Power Engineering Conference, AUPEC 2018, Institute of Electrical and Electronics Engineers Inc., 2018, pp. 1–7, https://doi.org/10.1109/AUPEC.2018.8757997.

[12] S.E. Razavi, E. Rahimi, M.S. Javadi, A.E. Nezhad, M. Lotfi, M. Shafie-khah, J.P. S. Catalão, Impact of distributed generation on protection and voltage regulation of distribution systems: a review, Renew. Sustain. Energy Rev. 105 (2019) 157–167, https://doi.org/10.1016/J.RSER.2019.01.050.

[13] M.M. Haque, P. Wolfs, A review of high PV penetrations in LV distribution networks: present status, impacts and mitigation measures, Renew. Sustain. Energy Rev. 62 (2016) 1195–1208, https://doi.org/10.1016/J.RSER.2016.04.025.

[14] A. Kharrazi, V. Sreeram, Y. Mishra, Assessment techniques of the impact of grid-tied rooftop photovoltaic generation on the power quality of low voltage distribution network - A review, Renew. Sustain. Energy Rev. 120 (2020) 109643, https://doi.org/10.1016/J.RSER.2019.109643.

[15] A.G. Givisiez, K. Petrou, L.F. Ochoa, A review on TSO-DSO coordination models and solution techniques, Electr. Power Syst. Res. 189 (2020) 106659, https://doi.org/10.1016/j.epsr.2020.106659.

[16] P. Mancarella, F. Billimoria, The fragile grid: the physics and economics of security services in low-carbon power systems, IEEE Power Energy Mag 19 (2021) 79–88, https://doi.org/10.1109/MPE.2020.3043570.

[17] N. Hatziargyriou, J. Milanovic, C. Rahmann, V. Ajjarapu, C. Canizares, I. Erlich, D. Hill, I. Hiskens, I. Kamwa, B. Pal, P. Pourbeik, J. Sanchez-Gasca, A. Stankovic, T. Van Cutsem, V. Vittal, C. Vournas, Definition and classification of power system stability - revisited & extended, IEEE Trans. Power Syst. 36 (2021) 3271–3281, https://doi.org/10.1109/TPWRS.2020.3041774.

[18] C.D. Vournas, V.C. Nikolaidis, G.I. Tsourakis, Coordinated countermeasures against overvoltage instability in autonomous power systems, IEEE Trans. Power Deliv. 36 (2021) 3329–3338, https://doi.org/10.1109/TPWRD.2020.3038773.

[19] L. Rouco, F.M. Echavarren, E. Lobato, The overvoltage-driven blackout of the Iberian Peninsula on 28th April 2025, Sustain. Energy Grids Netw. 45 (2026) 102125, https://doi.org/10.1016/j.segan.2026.102125.

[20] P. Kundur, Power System Stability and Control, McGraw-Hill (Inc.), New York, NY, USA, 1994.

[21] NERC, Short-circuit modeling and system strength. https://www.nerc.com/pa/RAPA/ra/Reliability%20Assessments%20DL/Short_Circuit_whitepaper_Final_1_26_18.pdf, 2018.

[22] L. Yu, S. Xu, H. Sun, B. Zhao, G. Wu, Zhou Xiaoxin, Multiple renewable short-circuit ratio for assessing weak system strength with inverter-based resources, CSEE J. Power Energy Syst. (2024), https://doi.org/10.17775/CSEEJPES.2023.10060.

[23] IEEE, IEEE application guide for IEEE std 1547™, IEEE standard for interconnecting distributed resources with electric power systems, 1547.2-2008, 2009. https://doi.org/10.1109/IEEESTD.2008.4816078.

[24] IEEE, IEEE Application Guide For IEEE Std 1547™-2018, IEEE Standard for Interconnection and Interoperability of Distributed Energy Resources with Associated Electric Power Systems Interfaces, IEEE Std 1547.2-2023 (Revision of IEEE Std 1547.2-2008), IEEE, Piscataway, NJ, USA, 2024, https://doi.org/10.1109/IEEESTD.2024.10534228.

[25] J. Susanto, F. Shahnia, D. Ludwig, A framework to technically evaluate integration of utility-scale photovoltaic plants to weak power distribution systems, Appl. Energy 231 (2018) 207–221, https://doi.org/10.1016/J.APENERGY.2018.09.130.

[26] E. Mudaheranwa, H.B. Sonder, L. Cipcigan, C.E. Ugalde-Loo, Estimation of Rwanda's power system inertia as input for long-term dynamic frequency response regulation planning, Electr. Power Syst. Res. 207 (2022) 107853, https://doi.org/10.1016/J.EPSR.2022.107853.

[27] E.L. de Aguiar, R. Cardoso, C.M. de Oliveira Stein, J.P. da Costa, E.G. Carati, E. L. de Aguiar, R. Cardoso, C.M. de Oliveira Stein, J.P. da Costa, E.G. Carati, Distributed renewable power sources in weak grids — Analysis and control, in: W. Cao, Y. Hu (Eds.), Renewable Energy - Utilisation and System Integration, IntechOpen, 2016, https://doi.org/10.5772/61613.

[28] R. Yin, Y. Sun, S. Wang, B. Zhao, G. Wu, S. Qin, L. Yu, Y. Zhao, Modeling and stability analysis of grid-tied VSC considering the impact of voltage feed-forward, Int. J. Electr. Power Energy Syst. 135 (2022) 107483, https://doi.org/10.1016/J.IJEPES.2021.107483.

[29] S.M. Alizadeh, C. Ozansoy, T. Alpcan, The impact of X/R ratio on voltage stability in a distribution network penetrated by wind farms, in: 2016 Australasian Universities Power Engineering Conference (AUPEC), Institute of Electrical and Electronics Engineers (IEEE), 2016, pp. 1–6, https://doi.org/10.1109/AUPEC.2016.7749289.

[30] M. Ahmed, L. Meegahapola, A. Vahidnia, M. Datta, Analyzing the effect of X/R ratio on dynamic performance of microgrids, in: Proceedings of 2019 IEEE PES Innovative Smart Grid Technologies Europe, ISGT-Europe 2019, Institute of Electrical and Electronics Engineers Inc., 2019, https://doi.org/10.1109/ISGTEUROPE.2019.8905556.

[31] S.H. Lee, D. Choi, S.-M. Baek, Complex short circuit ratio to evaluate grid robustness for inverter integration, IEEE Access 13 (2025) 132693–132702, https://doi.org/10.1109/ACCESS.2025.3589357.

[32] M.I. Saleem, S. Saha, U. Izhar, L. Ang, Stability assessment of inverter-based renewable energy sources integrated to weak grids, IET Energy Syst. Integr. 6 (2024) 525–544, https://doi.org/10.1049/ESI2.12151;CTYPE:STRING:JOURNAL.

[33] M.I. Saleem, S. Saha, L. Ang, U. Izhar, T.K. Roy, Factors affecting voltage stability while integrating inverter based renewable energy sources into weak power grids, IET Gener. Transm. Distrib. 17 (2023) 1216–1231, https://doi.org/10.1049/gtd2.12728.

[34] M.A. Hossain, H.R. Pota, M.J. Hossain, F. Blaabjerg, Evolution of microgrids with converter-interfaced generations: challenges and opportunities, Int. J. Electr. Power Energy Syst. 109 (2019) 160–186, https://doi.org/10.1016/j.ijepes.2019.01.038.

[35] R. Yan, T.K. Saha, N. Modi, N. Al Masood, M. Mosadeghy, The combined effects of high penetration of wind and PV on power system frequency response, Appl. Energy 145 (2015) 320–330, https://doi.org/10.1016/J.APENERGY.2015.02.044.

[36] K.A. Alboaouh, S. Mohagheghi, Impact of rooftop photovoltaics on the distribution system, J. Renew. Energy 2020 (2020) 4831434, https://doi.org/10.1155/2020/4831434.

[37] N.K.D. Dieng, M. Wolter, L. Thiaw, A.O. Manga, Inverter-based resources dominated grid: voltage and frequency stability in a weakly interconnected power system, E-Prime - Adv. Electr. Eng. Electron. Energy 12 (2025) 100984, https://doi.org/10.1016/j.prime.2025.100984.

[38] E. Xypolytou, W. Gawlik, T. Zseby, J. Fabini, Impact of asynchronous renewable generation infeed on grid frequency: analysis based on synchrophasor measurements, Sustainability 10 (2018) 1605, https://doi.org/10.3390/SU10051605, 2018Page 1605 10.

[39] W.J. Farmer, A.J. Rix, Optimising power system frequency stability using virtual inertia from inverter-based renewable energy generation, IET Renew. Power Gener. 14 (2020) 2820–2829, https://doi.org/10.1049/IET-RPG.2020.0042.

[40] M.I. Saleem, S. Saha, T.K. Roy, S.K. Ghosh, Assessment and management of frequency stability in low inertia renewable energy rich power grids, IET Gener. Transm. Distrib. 18 (2024) 1372–1390, https://doi.org/10.1049/GTD2.13129.

[41] W.J. Farmer, A.J. Rix, Understanding the impact of network topology on frequency stability considering continuous spatial-temporal disturbances from wind generation, Int. J. Electr. Power Energy Syst. 129 (2021) 106776, https://doi.org/10.1016/J.IJEPES.2021.106776.

[42] M.A. Haque, M. Al-Hasib, A. Jawad, M.Zahurul Islam, Investigation of frequency and voltage stability of high renewable penetrated grid, in: IEEE Region 10 Humanitarian Technology Conference, R10-HTC, Institute of Electrical and Electronics Engineers Inc., 2023, pp. 132–137, https://doi.org/10.1109/R10-HTC57504.2023.10461760.

[43] A. Hadavi, M.T. Hagh, S.G. Zadeh, Critical inertia thresholds for frequency stability in renewable energy-integrated power systems, Int. J. Electr. Power Energy Syst. 169 (2025) 110733, https://doi.org/10.1016/J.IJEPES.2025.110733.

[44] G.M. Njoka, L. Mogaka, A. Wangai, Impact of variable renewable energy sources on the power system frequency stability and system inertia, Energy Rep. 12 (2024) 4983–4997, https://doi.org/10.1016/J.EGYR.2024.10.057.

[45] A. Ameur, A. Berrada, K. Loudiyi, M. Aggour, Analysis of renewable energy integration into the transmission network, Electr. J. 32 (2019) 106676, https://doi.org/10.1016/J.TEJ.2019.106676.

[46] I.J. Perez-Arriaga, The transmission of the future: the impact of distributed energy resources on the network, IEEE Power Energy Mag. 14 (2016) 41–53, https://doi.org/10.1109/MPE.2016.2550398.

[47] M. Alanazi, M. Mahoor, A. Khodaei, Co-optimization generation and transmission planning for maximizing large-scale solar PV integration, Int. J. Electr. Power Energy Syst. 118 (2020) 105723, https://doi.org/10.1016/J.IJEPES.2019.105723.
[48] E. Bompard, E. Carpaneto, G. Chicco, R. Napoli, Worst-load-increase direction method for fast identification of voltage-weakness indicators, IEE Proc. - Gener. Transm. Distrib. 145 (1998) 27–32, https://doi.org/10.1049/IP-GTD:19981579.
[49] C.D. Vournas, C. Lambrou, P. Mandoulidis, Voltage stability monitoring from a transmission bus PMU, IEEE Trans. Power Syst. 32 (2017) 3266–3274, https://doi.org/10.1109/TPWRS.2016.2629495.
[50] I. Ponce, C. Rahmann, P. Pourbeik, Identification of weak frequency areas in low inertia systems, IEEE Access 13 (2025) 90262–90272, https://doi.org/10.1109/ACCESS.2025.3570908.
[51] D. Zografos, M. Ghandhari, R. Eriksson, Power system inertia estimation: utilization of frequency and voltage response after a disturbance, Electr. Power Syst. Res. 161 (2018) 52–60, https://doi.org/10.1016/J.EPSR.2018.04.008.
[52] F. Zeng, J. Zhang, G. Chen, Z. Wu, S. Huang, Y. Liang, Online estimation of power system inertia constant under normal operating conditions, IEEE Access 8 (2020) 101426–101436, https://doi.org/10.1109/ACCESS.2020.2997728.
[53] Y. Zhao, Y. Liu, Real-time inertia estimation using probing method and PMU measurement, Energy Syst. (2025) 1–21, https://doi.org/10.1007/s12667-025-00730-x.
[54] S. Saha, M.I. Saleem, T.K. Roy, Impact of high penetration of renewable energy sources on grid frequency behaviour, Int. J. Electr. Power Energy Syst. 145 (2023) 108701, https://doi.org/10.1016/J.IJEPES.2022.108701.
[55] S. Harasis, K. Mahmoud, S. Albatran, K. Alzaareer, Q. Salem, Dynamic performance evaluation of inverter feeding a weak grid considering variable system parameters, IEEE Access 9 (2021) 126104–126116, https://doi.org/10.1109/ACCESS.2021.3111047.
[56] M.R. Maghami, J. Pasupuleti, C.M. Ling, Impact of photovoltaic penetration on medium voltage distribution network, Sustainability 15 (2023) 5613, https://doi.org/10.3390/SU15075613.
[57] P.T. Manditereza, R.C. Bansal, Fault detection and location algorithm for DG-integrated distribution systems, J. Eng. 2018 (2018) 1286–1290, https://doi.org/10.1049/JOE.2018.0247.
[58] L. Tang, Y. Han, A.S. Zalhaf, S. Zhou, P. Yang, C. Wang, T. Huang, Resilience enhancement of active distribution networks under extreme disaster scenarios: a comprehensive overview of fault location strategies, Renew. Sustain. Energy Rev. 189 (2024) 113898, https://doi.org/10.1016/J.RSER.2023.113898.
[59] Y. Xue, I. Sharma, T. Kuruganti, J. Nutaro, J. Dong, M. Olama, D. Fugate, Voltage impact analyses of solar photovoltaics on distribution load tap changer operations, in: 2017 North American Power Symposium, NAPS 2017, Institute of Electrical and Electronics Engineers Inc., 2017, https://doi.org/10.1109/NAPS.2017.8107252.
[60] J. Dong, Y. Xue, T. Kuruganti, I. Sharma, J. Nutaro, M. Olama, J.M. Hill, J. W. Bowen, Operational impacts of high penetration solar power on a real-world distribution feeder, in: 2018 IEEE Power and Energy Society Innovative Smart Grid Technologies Conference, ISGT 2018, Institute of Electrical and Electronics Engineers Inc., 2018, pp. 1–5, https://doi.org/10.1109/ISGT.2018.8403344.
[61] J. Wang, Foundational report series: advanced distribution management systems for grid modernization, Argonne, IL (United States), http://www.osti.gov/servlets/purl/1227398/, 2015.
[62] V. Vijayan, A. Arzani, S.M. Mahajan, Network reconfiguration in electric power distribution networks: a review, IEEE Trans, Ind, Appl (2025), https://doi.org/10.1109/TIA.2025.3621570.
[63] M. Jaskólski, P. Bućko, S. Czapp, The evolution of low- and medium-voltage distribution system development planning procedures and methods—A review, Energies 18 (2025) 3461, https://doi.org/10.3390/EN18133461.
[64] J. Chen, M. Liu, G. De Carne, R. Zhu, M. Liserre, F. Milano, T. O'Donnell, Impact of smart transformer voltage and frequency support in a high renewable penetration system, Electr. Power Syst. Res. 190 (2021) 106836, https://doi.org/10.1016/J.EPSR.2020.106836.
[65] M. Azab, Intra-minutes technical impacts of PV grid integration on distribution network operation of a rural community under extreme PV power delivery, Energy Syst. 11 (2020) 213–245, https://doi.org/10.1007/s12667-018-0307-7.
[66] J.-F. Toubeau, V. Klonari, J. Lobry, Z. De Grève, F. Vallée, Planning tools for the integration of renewable energy sources into low- and medium-voltage distribution grids, in: W. Cao, Y. Hu (Eds.), Renewable Energy: Utilisation and System Integration, IntechOpen, 2016, pp. 227–260.
[67] T. Tavares de Oliveira, M.H.J. Bollen, Relation between hosting capacity of MV and LV networks and a joint hosting capacity assessment, Int. J. Electr. Power Energy Syst. 174 (2026) 111448, https://doi.org/10.1016/j.ijepes.2025.111448.
[68] A. Benzerga, A. Bahmanyar, G. Derval, D. Ernst, A unified definition of hosting capacity, applications, and review, IEEE Access 13 (2025) 7819–7836, https://doi.org/10.1109/ACCESS.2024.3521223.
[69] K.G.H. Mangunkusumo, A. Rizqiawan, S. Sriyono, B.S. Munir, P.A. Pramana, M. Ridwan, Enhancing grid stability in renewable energy systems through synchronous condensers: a case study on dedieselization and assessment criteria development, Energies 8 (2025) 1410, https://doi.org/10.3390/EN18061410.
[70] ENTSO-E Technopedia, Synchronous condensers, Entsoe Electrifying Europe. https://www.entsoe.eu/technopedia/techsheets/synchronous-condenser/, 2025 (accessed March 18, 2026).
[71] H.T. Nguyen, G. Yang, A.H. Nielsen, P.H. Jensen, Frequency stability improvement of low inertia systems using synchronous condensers, in: 2016 IEEE International Conference on Smart Grid Communications, SmartGridComm 2016, Institute of Electrical and Electronics Engineers Inc., 2016, pp. 650–655, https://doi.org/10.1109/SMARTGRIDCOMM.2016.7778835.
[72] H.T. Nguyen, G. Yang, A.H. Nielsen, P.H. Jensen, Combination of synchronous condenser and synthetic inertia for frequency stability enhancement in low-inertia systems, IEEE Trans. Sustain. Energy 10 (2018) 997–1005, https://doi.org/10.1109/TSTE.2018.2856938.
[73] L. Richard, T.K.Saha Nahid-Al-Masood, W. Tushar, H. Gu, Optimal allocation of synchronous condensers in wind dominated power grids, IEEE Access 8 (2020) 45400–45410, https://doi.org/10.1109/ACCESS.2020.2977941.
[74] E. Marrazi, G. Yang, P. Weinreich-Jensen, Allocation of synchronous condensers for restoration of system short-circuit power, J. Mod. Power Syst. Clean Energy 6 (2018) 17–26, https://doi.org/10.1007/S40565-017-0346-4.
[75] S. Hadavi, M.Z. Mansour, B. Bahrani, Optimal allocation and sizing of synchronous condensers in weak grids with increased penetration of wind and solar farms, IEEE J. Emerg, Sel, Top, Circuits Syst 11 (2021) 199–209, https://doi.org/10.1109/JETCAS.2021.3053554.
[76] H. Soleimani, D. Habibi, M. Ghahramani, A. Aziz, Strengthening power systems for net zero: a review of the role of synchronous condensers and emerging challenges, Energies 17 (2024) 3291, https://doi.org/10.3390/EN17133291.
[77] W. Sang, W. Guo, S. Dai, C. Tian, S. Yu, Y. Teng, Virtual synchronous generator, a comprehensive overview, Energies 15 (2022) 6148, https://doi.org/10.3390/EN15176148.
[78] T. Kerdphol, F.S. Rahman, Y. Mitani, Virtual inertia control application to enhance frequency stability of interconnected power systems with high renewable energy penetration, Energies 11 (2018) 981, https://doi.org/10.3390/EN11040981.
[79] O.O. Mohammed, A.O. Otuoze, S. Salisu, O. Ibrahim, N.A. Rufa'i, Virtual synchronous generator: an overview, Niger. J. Technol. 38 (2019) 153–164, https://doi.org/10.4314/NJT.V38I1.20.
[80] N.U.P. Putri, K. Khairudin, N. Purwasih, Frequency stability control in low -inertia power system using virtual synchronous generator, J. Eng. Sci. Res. 3 (2021) 7–12, https://doi.org/10.23960/JESR.V3I1.56.
[81] K.M. Cheema, A comprehensive review of virtual synchronous generator, Int. J. Electr. Power Energy Syst. 120 (2020) 106006, https://doi.org/10.1016/J.IJEPES.2020.106006.
[82] M. Chen, D. Zhou, F. Blaabjerg, Modelling, implementation, and assessment of virtual synchronous generator in power systems, J. Mod. Power Syst. Clean Energy 8 (2020) 399–411, https://doi.org/10.35833/MPCE.2019.000592.
[83] D. Leng, S. Polmai, Virtual synchronous generator based on hybrid energy storage system for PV power fluctuation mitigation, Appl. Sci. 9 (2019) 5099, https://doi.org/10.3390/APP9235099.
[84] A.E. Leon, J.M. Mauricio, Virtual synchronous generator design to improve frequency support of converter-interfaced systems, IEEE Trans. Energy Convers. 39 (2024) 862–871, https://doi.org/10.1109/TEC.2023.3333260.
[85] Y. Zhou, H. Xin, D. Wu, F. Liu, Z. Li, G. Wang, H. Yuan, P. Ju, Small-signal stability assessment of heterogeneous grid-following converter power systems based on grid strength analysis, IEEE Trans. Power Syst. 38 (2023) 2566–2579, https://doi.org/10.1109/TPWRS.2022.3183005.
[86] D.B. Rathnayake, M. Akrami, C. Phurailatpam, S.P. Me, S. Hadavi, G. Jayasinghe, S. Zabihi, B. Bahrani, Grid forming inverter modeling, control, and applications, IEEE Access 9 (2021) 114781–114807, https://doi.org/10.1109/ACCESS.2021.3104617.
[87] Svenska kraftnät, The Nordic position on grid-forming enabling the future Nordic power system. https://www.svk.se/4aa98d/siteassets/om-oss/rapporter/2025/the-nordic-position-on-grid-forming_publication.pdf, 2025.
[88] D.B. Rathnayake, R. Razzaghi, B. Bahrani, Generalized virtual synchronous generator control design for renewable power systems, IEEE Trans. Sustain. Energy 13 (2022) 1021–1036, https://doi.org/10.1109/TSTE.2022.3143664.
[89] N. Mohammed, H. Udawatte, W. Zhou, D.J. Hill, B. Bahrani, Grid-forming inverters: a comparative study of different control strategies in frequency and time domains, IEEE Open J. Ind. Electron. Soc. 5 (2024) 185–214, https://doi.org/10.1109/OJIES.2024.3371985.
[90] B. Bhowmik, M.A. Acquah, S.-Y. Kim, Hybrid compatible grid forming inverters with coordinated regulation for low inertia and mixed generation grids, Sci, Rep 15 (2025) 1–27. https://www.nature.com/articles/s41598-025-11367-2.
[91] A. Peña Asensio, S. Arnaltes Gómez, J.L. Rodriguez-Amenedo, Black-start capability of PV power plants through a grid-forming control based on reactive power synchronization, Int. J. Electr. Power Energy Syst. 146 (2023) 108730, https://doi.org/10.1016/J.IJEPES.2022.108730.
[92] M. Khan, W. Wu, L. Li, Grid-forming control for inverter-based resources in power systems: a review on its operation, system stability, and prospective, IET Renew. Power Gener. 18 (2024) 887–907. https://onlinelibrary.wiley.com/doi/abs/10.1049/rpg2.12991.
[93] K. Rahman, J. Hashimoto, D. Orihara, T.S. Ustun, K. Otani, H. Kikusato, Y. Kodama, Reviewing control paradigms and emerging trends of grid-forming inverters—A comparative study, Energies 17 (2024) 2400, https://doi.org/10.3390/EN17102400.
[94] G.M. Tina, G. Maione, D. Stefanelli, The impact of grid-forming vs. grid-following converters on frequency regulation: comparing centralised or distributed photovoltaic generation, Energies 17 (2024) 5827, https://doi.org/10.3390/EN17235827.
[95] V.V. Babu, J.P. Roselyn, C. Nithya, P. Sundaravadivel, Development of grid-forming and grid-following inverter control in microgrid network ensuring grid stability and frequency response, Electron. (Basel) 13 (2024) 1958, https://doi.org/10.3390/ELECTRONICS13101958.

[96] P.L. Alconero, S.S. Rangarajan, E.R. Collins, T. Senjyu, Grid forming inverter as an advanced smart inverter for augmented ancillary services in a low inertia and a weak grid system towards grid modernization, Clean Technol. 6 (2024) 1011–1037, https://doi.org/10.3390/CLEANTECHNOL6030051.
[97] A. Radwan, M.A. Elshenawy, Y.A.R.I. Mohamed, E.F. El-Saadany, Grid-forming voltage-source inverter for hybrid wind-solar systems interfacing weak grids, IEEE Open J. Power Electron. 5 (2024) 956–975, https://doi.org/10.1109/OJPEL.2024.3410908.
[98] A.Q. Al-Shetwi, W.K. Issa, R.F. Aqeil, T.S. Ustun, H.M.K. Al-Masri, K. Alzaareer, M.G.M. Abdolrasol, M.A. Abdullah, Active power control to mitigate frequency deviations in large-scale grid-connected PV system using grid-forming single-stage inverters, Energies 15 (2022) 2035, https://doi.org/10.3390/EN15062035.
[99] F. Kalavani, B. Mohammadi-Ivatloo, F. Kalavani, Application of energy storage technologies on energy management of microgrids, in: R.K. Chauhan, K. K. Chauhan, S.N. Singh (Eds.), Microgrids For Rural Areas: Research and Case Studies, Institution of Engineering and Technology, 2020, pp. 77–98, https://doi.org/10.1049/PBPO160E_ch5.
[100] I.U. Salam, M. Yousif, M. Numan, M. Billah, Addressing the challenge of climate change: the role of microgrids in fostering a sustainable future - a comprehensive review, Renew. Energy Focus 48 (2024) 100538, https://doi.org/10.1016/J.REF.2024.100538.
[101] V. Mahadevan, S.R. S, M.A. Rusho, S. Yishak, Critical review of energy storage systems: a comparative assessment of mechanisms, advantages, challenges, and integration with renewable energy, Results Eng. 26 (2025) 105589, https://doi.org/10.1016/J.RINENG.2025.105589.
[102] M.M. Islam, T. Yu, G. Giannoccaro, Y. Mi, M. La Scala, M.N. Rajabi, J. Wang, Improving reliability and stability of the power systems: a comprehensive review on the role of energy storage systems to enhance flexibility, IEEE Access (2024), https://doi.org/10.1109/ACCESS.2024.3476959.
[103] B. Hai, R. Wang, Q. Sun, Z. Li, P. Wang, Research on the configuration strategy of active support long-and short-term energy storage devices based on ESD-considered short circuit ratio, Sci Rep 15 (1) (2025) 38298, https://doi.org/10.1038/s41598-025-22289-4, 202515-.
[104] M.I. Fernandez, Y.I. Go, D.M.L. Wong, W.G. Früh, Review of challenges and key enablers in energy systems towards net zero target: renewables, storage, buildings, & grid technologies, Heliyon 10 (2024) e40691, https://doi.org/10.1016/J.HELIYON.2024.E40691.
[105] D. Al Kez, A.M. Foley, F. Ahmed, D.J. Morrow, Overview of frequency control techniques in power systems with high inverter-based resources: challenges and mitigation measures, IET Smart Grid 6 (2023) 447–469, https://doi.org/10.1049/stg2.12117.
[106] J. Bryant, E. Munkhchuluun, P. Sokolowski, M. Jalili, L. Meegahapola, X. Yu, R. Jennings, K. Summers, A supercapacitor-based inertial response scheme to enhance frequency stability in future energy systems with large wind parks, in: Proceedings - 2020 International Conference on Smart Grids and Energy Systems, SGES 2020, Institute of Electrical and Electronics Engineers Inc., 2020, pp. 783–788, https://doi.org/10.1109/SGES51519.2020.00145.
[107] J. Zhang, M. Gu, X. Chen, Supercapacitors for renewable energy applications: a review, Micro Nano Eng. 21 (2023) 100229, https://doi.org/10.1016/J.MNE.2023.100229.
[108] D. Niu, J. Fang, W. Yau, S.M. Goetz, Comprehensive evaluation of energy storage systems for inertia emulation and frequency regulation improvement, Energy Rep. 9 (2023) 2566–2576, https://doi.org/10.1016/J.EGYR.2023.01.110.
[109] A.K. Hasan, M.H. Haque, S.Mahfuzul Aziz, Enhancing frequency response characteristics of low inertia power systems using battery energy storage, IEEE Access 12 (2024) 116861–116874, https://doi.org/10.1109/ACCESS.2024.3444330.
[110] M.R. Jannesar, S. Sadr, M. Savaghebi, Optimal sitting, sizing and control of battery energy storage to enhance dynamic stability of low-inertia grids, IET Renew. Power Gener. 18 (2024) 2925–2941, https://doi.org/10.1049/rpg2.13079.
[111] M.N.H. Shazon, H.M.Ahmed Nahid-Al-Masood, S.R. Deeba, E. Hossain, Exploring the utilization of energy storage systems for frequency response adequacy of a low inertia power grid, IEEE Access 9 (2021) 129933–129950, https://doi.org/10.1109/ACCESS.2021.3114216.
[112] C.E. Okafor, K.A. Folly, Optimal placement of BESS in a power system network for frequency support during contingency, Energy Rep. 10 (2023) 3681–3695, https://doi.org/10.1016/J.EGYR.2023.10.017.
[113] S. Khunkitti, P. Boonluk, A. Siritaratiwat, Optimal location and sizing of BESS for performance improvement of distribution systems with high DG penetration, Int. Trans. Electr. Energy Syst. 2022 (2022) 6361243, https://doi.org/10.1155/2022/6361243.
[114] J. Yu, J. Fang, Y. Tang, Inertia emulation by flywheel energy storage system for improved frequency regulation, in: 2018 IEEE 4th Southern Power Electronics Conference, SPEC 2018, Institute of Electrical and Electronics Engineers Inc., 2018, https://doi.org/10.1109/SPEC.2018.8635947.
[115] B.P. Saripalli, G. Singh, S. Singh, Supercapacitors based energy storage system for mitigating solar photovoltaic output power fluctuations, World J. Eng. 20 (2023) 815–834, https://doi.org/10.1108/WJE-08-2021-0468.
[116] R.K. Sarojini, P. Kaliannan, Inertia emulation through supercapacitor for a weak grid, IEEE Access 9 (2021) 30793–30802, https://doi.org/10.1109/ACCESS.2021.3058951.
[117] A. Jawad, K.I. Ahmed, I. Mahmud, Nahid-Al-Masood, Optimal supercapacitor energy storage system sizing for frequency control in a large-scale photovoltaic integrated grid, in: ICT-PEP 2023 - 2023 International Conference on Technology and Policy in Energy and Electric Power: Decarbonizing the Power Sector: Opportunities and Challenges for Renewable Energy Integration, Proceedings, Institute of Electrical and Electronics Engineers Inc., 2023, pp. 52–57, https://doi.org/10.1109/ICT-PEP60152.2023.10351124.
[118] R. Sharma, S. Suhag, Power quality and stability improvement of hybrid energy system under weak grid environment, Arab, J. Sci, Eng 43 (2018) 3065–3081, https://doi.org/10.1007/s13369-018-3109-2.
[119] W. Jing, C.H. Lai, W.S.H. Wong, M.L.D. Wong, A comprehensive study of battery-supercapacitor hybrid energy storage system for standalone PV power system in rural electrification, Appl. Energy 224 (2018) 340–356, https://doi.org/10.1016/J.APENERGY.2018.04.106.
[120] K. Islam, D. Kim, A. Abu-Siada, A review on adaptive power system protection schemes for future smart and micro grids, challenges and opportunities, Electr. Power Syst. Res. 230 (2024) 110241, https://doi.org/10.1016/J.EPSR.2024.110241.
[121] N. Aisyah, M. Yusof, Z. Ali, M. Zainal, A.A. Kadir, A review of adaptive overcurrent protection in distribution networks with integration of distributed energy resources, Indones. J. Electr. Eng. Comput, Sci. 19 (2020) 140–148. https://pdfs.semanticscholar.org/b816/ec3accd28f098d0188bcbf07b9f81fb2342e.pdf.
[122] J. Li, J. Feng, H. Bai, H. Wang, W. Li, M. Huang, G. Wang, An adaptive protection scheme for multiple single-phase grounding faults in radial distribution networks with inverter-interfaced distributed generators, Int. J. Electr. Power Energy Syst. 152 (2023) 109221, https://doi.org/10.1016/j.ijepes.2023.109221.
[123] D. Saha, B.K.S. ROY, P.N. Das, Online adaptive protection scheme for electrical distribution network with high penetration of renewable energy sources, J. Eng. Res. 7 (2019). https://kuwaitjournals.org/jer/index.php/JER/article/view/4793.
[124] L. Ji, Y. Tong, Z. Yu, E. Jiang, R. Xi, J. Yin, Y. Fu, A control based protection adaptability improving strategy for transmission line with renewable energy integration, Int. J. Electr. Power Energy Syst. 149 (2023) 109009, https://doi.org/10.1016/J.IJEPES.2023.109009.
[125] A.H. El-Hamrawy, A.A.M. Ebrahiem, A.I. Megahed, Improved adaptive protection scheme based combined centralized/decentralized communications for power systems equipped with distributed generation, IEEE Access 10 (2022) 97061–97074, https://doi.org/10.1109/ACCESS.2022.3205312.
[126] N.H. Torshizi, H. Najafi, A. Saberi Noghabi, J. Sadeh, An adaptive characteristic for overcurrent relays considering uncertainty in presence of distributed generation, Int. J. Electr. Power Energy Syst. 128 (2021) 106688, https://doi.org/10.1016/J.IJEPES.2020.106688.
[127] O. Mirzapour, X. Rui, M. Sahraei-Ardakani, Grid-enhancing technologies: progress, challenges, and future research directions, Electr. Power Syst. Res. 230 (2024) 110304, https://doi.org/10.1016/J.EPSR.2024.110304.
[128] R.H. Ahmed, A.S. Nouri, Static synchronous compensator (STATCOM) and static VAR compensators (SVCs) -based neural network controllers for improving power system grid, J. Elect, Electron, Res 12 (2024) 247–252, https://doi.org/10.37391/IJEER.120134.
[129] A. Nishioka, A. Hassanpoor, Accelerating energy transition and rapid increase of HVDC, Glob. Innov. Rep. 1 (2023). https://www.hitachihyoron.com/rev/archive/2023/r2023_04/gir1/index.html (accessed March 18, 2026).
[130] R. Irnawan, R.F. Mochamad, F. Faria Da Silva, Q. Zhang, C.Leth Bak Sarjiya, E. Haryadi, Review of HVDC technologies for weak grid interconnectors, Electr. Eng. 107 (2024) 4483–4501. https://link.springer.com/article/10.1007/s00202-024-02761-6.
[131] J. Stojkovic, A. Lekic, P. Stefanov, Adaptive control of HVDC links for frequency stability enhancement in low-inertia systems, Energies 13 (2020) 6162, https://doi.org/10.3390/EN13236162.
[132] L. Su, X. Qin, S. Zhang, Y. Zhang, Y. Jiang, Y. Han, Fast frequency response of inverter-based resources and its impact on system frequency characteristics, Glob. Energy Interconnect. 3 (2020) 475–485, https://doi.org/10.1016/J.GLOEI.2020.11.007.
[133] G. Varhegyi, M. Nour, Advancing fast frequency response ancillary services in renewable-heavy grids: a global review of energy storage-based solutions and market dynamics, Energies 17 (2024) 3737, https://doi.org/10.3390/EN17153737, 2024.
[134] B. Hiron, Faster frequency response to support the future security of the power system, AEMC (n.d.). https://www.aemc.gov.au/faster-frequency-response-support-future-security-power-system (accessed March 18, 2026).
[135] H. Alsharif, M. Jalili, K.N. Hasan, Fast frequency response services in low inertia power systems—A review, Energy Rep. 9 (2023) 228–237, https://doi.org/10.1016/J.EGYR.2023.05.193.
[136] P. González-Inostroza, C. Rahmann, R. Álvarez, J. Haas, W. Nowak, C. Rehtanz, The role of fast frequency response of energy storage systems and renewables for ensuring frequency stability in future low-inertia power systems, Sustainability 13 (2021) 5656, https://doi.org/10.3390/SU13105656.
[137] L. Meng, J. Zafar, S.K. Khadem, A. Collinson, K.C. Murchie, F. Coffele, G.M. Burt, Fast frequency response from energy storage systems - A review of grid standards, projects and technical issues, IEEE Trans. Smart Grid 11 (2020) 1566–1581, https://doi.org/10.1109/TSG.2019.2940173.
[138] Q. Hong, M. Nedd, S. Norris, I. Abdulhadi, M. Karimi, V. Terzija, B. Marshall, K. Bell, C. Booth, Fast frequency response for effective frequency control in power systems with low inertia, J. Eng. (2019) 1696–1702, https://doi.org/10.1049/JOE.2018.8599, 2019.
[139] B.K. Wamukoya, K.K. Kaberere, C.M. Muriithi, K. Murang'a, Optimal deployment of solar PV power plants as fast frequency response source for a frequency secure low inertia power grid, Bull. Electr. Eng. Inform. 14 (2025) 83–95, https://doi.org/10.11591/eei.v14i1.8548.

[140] Y. Tang, C. Yang, Z. Yan, Y. Xue, Y. He, Coordinated control of a wind turbine and battery storage system in providing fast-frequency regulation and extending the cycle life of battery, Front, Energy Res 10 (2022) 927453, https://doi.org/10.3389/FENRG.2022.927453/BIBTEX.
[141] B. Lundstrom, S. Patel, M.V. Salapaka, Distribution feeder-scale fast frequency response via optimal coordination of net-load resources - part I: solution design, IEEE Trans. Smart Grid 12 (2020) 1289–1302, https://doi.org/10.1109/TSG.2020.3032097.
[142] B. Lundstrom, S. Patel, M.V. Salapaka, Distribution feeder-scale fast frequency response via optimal coordination of net-load resources - part II: large-scale demonstration, IEEE Trans. Smart Grid 12 (2020) 1445–1454, https://doi.org/10.1109/TSG.2020.3032107.
[143] M.H. Albadi, E.F. El-Saadany, A summary of demand response in electricity markets, Electr. Power Syst. Res. 78 (2008) 1989–1996, https://doi.org/10.1049/iet-gtd:20060183.
[144] R. Yasmin, B.M.R. Amin, R. Shah, A. Barton, A survey of commercial and industrial demand response flexibility with energy storage systems and renewable energy, Sustainability 16 (2024) 731, https://doi.org/10.3390/SU16020731.
[145] L. Liu, H. Matayoshi, M.E. Lotfy, M. Datta, T. Senjyu, Load frequency control using demand response and storage battery by considering renewable energy sources, Energies 11 (2018) 3412, https://doi.org/10.3390/EN11123412, 2018.
[146] I. Muñoz-Benavente, A.D. Hansen, E. Gómez-Lázaro, T. García-Sánchez, A. Fernández-Guillamón, Á. Molina-García, Impact of combined demand-response and wind power plant participation in frequency control for multi-area power systems, Energies 12 (2019) 1687, https://doi.org/10.3390/EN12091687.
[147] A. Ly, S. Bashash, Fast transactive control for frequency regulation in smart grids with demand response and energy storage, Energies 13 (2020) 4771, https://doi.org/10.3390/EN13184771.
[148] X.C. Miow, Y.S. Lim, L.C. Hau, J. Wong, H. Patsios, Demand response for frequency regulation with neural network load controller under high intermittency photovoltaic systems, Energy Rep. 9 (2023) 2869–2880, https://doi.org/10.1016/J.EGYR.2023.01.099.
[149] M.A. Mosa, M.R. Elshenawy, A. Mohamed, A.A. Ali, Optimal energy management considering consumer individual incentive rate demand response program and real time pricing, Electr. Power Syst. Res. 246 (2025) 111700, https://doi.org/10.1016/J.EPSR.2025.111700.
[150] S.K. Gupta, T. Ghose, K. Chatterjee, Coordinated control of incentive-based demand response program and BESS for frequency regulation in low inertia isolated grid, Electr. Power Syst. Res. 209 (2022) 108037, https://doi.org/10.1016/J.EPSR.2022.108037.
[151] B. Canizes, V. Silveira, Z. Vale, Demand response and dispatchable generation as ancillary services to support the low voltage distribution network operation, Energy Rep. 8 (2022) 7–15, https://doi.org/10.1016/J.EGYR.2022.01.040.
[152] EDSO, A Toolbox For TSOs and DSOs to Make Use of New System and Grid Services, European Distribution System Operators (EDSO), 2019. https://www.edsoforsmartgrids.eu/edso-publications/a-toolbox-for-tsos-and-dsos-to-make-use-of-new-system-and-grid-services/ (accessed March 18, 2026).
[153] E.A. Nezhad, T.T. Sabour, R.P. Joshi, Coordinated TSO-DSO operational planning for congestion management in day-ahead and real-time markets, E-Prime - advances in Electrical engineering, Electron. Energy 12 (2025) 100981, https://doi.org/10.1016/J.PRIME.2025.100981.
[154] B. Barać, M. Krpan, T. Capuder, Aggregated model of an active distribution system for coordinated TSO–DSO fast frequency control, Sustain. Energy Grids Netw. 39 (2024) 101421, https://doi.org/10.1016/J.SEGAN.2024.101421.
[155] M. Radi, N. Suljanovic, M. Maksič, G. Taylor, I. Pisica, A. Souvent, Decentralized TSO-DSO coordination for voltage regulation purposes based on renewable energy sources management – Sensitivity and robustness analyses, Electr. Power Syst. Res. 213 (2022) 108674, https://doi.org/10.1016/J.EPSR.2022.108674.
[156] F. Najibi, D. Apostolopoulou, E. Alonso, TSO-DSO coordination schemes to facilitate distributed resources integration, Sustainability 13 (2021), https://doi.org/10.3390/su13147832, 202113.
[157] Y. Zahraoui, B.R. Pokhrel, I. Oleinikova, S.N. Gros, Assessment of TSO-DSO coordination to enhance flexible grid operation, Curr. Sustain./Renew. Energy Rep. 12 (1) (2025) 20, 202512, https://link.springer.com/article/10.1007/s40518-025-00269-6.
[158] R. Cleenwerck, R. Claeys, T. Coosemans, J. Desmet, Distribution networks in transition: a European survey on challenges and opportunities, Renew. Sustain. Energy Rev. 234 (2026) 116885, https://doi.org/10.1016/j.rser.2026.116885.