POLITECNICO DI TORINO
Repository ISTITUZIONALE

The future of electric mobility between technology, business acceptance and policy making: lessons learned from the INCIT-EV project

Original
The future of electric mobility between technology, business acceptance and policy making: lessons learned from the INCIT-EV project / Cota, A.F., Perboli, G., Guglielmi, P., Munoz, A.M., Aznar, G.F., Alfonso, I.M.T., Damm, G., Hassan, H.A., Pombo, J.D.B., Salazar, P.. - In: IEEE ACCESS. - ISSN 2169-3536. - (2026), pp. 1-1. [10.1109/access.2026.3681435]

Availability:
This version is available at: 11583/3009728 since: 2026-04-09T11:55:45Z

Publisher:
IEEE

Published
DOI:10.1109/access.2026.3681435

Terms of use:

This article is made available under terms and conditions as specified in the corresponding bibliographic description in the repository

Publisher copyright

(Article begins on next page)

26 November 2026

IEEE Access
Multidisciplinary ⋮ Rapid Review ⋮ Open Access Journal

Received 12 March 2026, accepted 30 March 2026, date of publication 6 April 2026, date of current version 13 May 2026.

Digital Object Identifier 10.1109/ACCESS.2026.3681435

PERSPECTIVE

The Future of Electric Mobility Between Technology, Business Acceptance, and Policy Making: Lessons Learned From the INCIT-EV Project

ALFREDO FELIX COTA[1], GUIDO PERBOLI[1], PAOLO GUGLIELMI[1], (Member, IEEE), ANTONIO-MIGUEL MUÑOZ-GÓMEZ[2], GREGORIO FERNÁNDEZ AZNAR[2], IRENE MARIA TORRES ALFONSO[2], GILNEY DAMM[3,4], (Member, IEEE), HUSSEIN AL-HAJ HASSAN[4], JUAN DE BLAS POMBO[5], AND PEDRO SALAZAR[5]

[1]Politecnico di Torino, 10129 Torino, Italy
[2]Fundación CIRCE, 50018 Zaragoza, Spain
[3]COSYS-IMSE, IFSTTAR, Gustave Eiffel University, 77454 Marne-la-Vallée, France
[4]Institut VEDECOM, 78000 Versailles, France
[5]Qi Arrow, 28224 Madrid, Spain

Corresponding author: Alfredo Felix Cota (alfredo.cota@polito.it)

This work was supported by the INCIT-EV Project (https://www.incit-ev.eu/), funded by European Union Horizon 2020 Program (H2020-LC-GV-2019) under Grant 875683.

ABSTRACT INCIT-EV was an European Project financed under the Horizon2020 programme, grant agreement number 875683, that involved over 30 partners, grouped in national consortia (Spain, France, Netherlands, Estonia and Italy) and developed 7 case studies aimed at experimenting with new charging solutions for Electric Vehicles (EV) and business models capable of fostering the adoption of EVs in the European Union (EU). The project successfully ended on 30/6/2024, and the present work is aimed at illustrating the results of the research activities and experimental tests carried out, with an in-depth outlook on the future of EV charging and EV adoption based on the information gathered and the experiences of this project regarding the technology development, the economics of the EV market and the importance of the policy making activities by the governance authorities and technical committees.

INDEX TERMS European electric vehicle adoption, DC EV charging, DC/DC converters, EV business models.

AC	Alternating current.
AFE	Active front end.
CAN	Controller area network.
CCS	Combined Charging System.
CEN-CENELEC	European committee for standardization and european committee for electrotechnical standardization.
CPO	Charging point operator.
DC	Direct current.
DSS	Decision support system.
DSOs	Distribution system operators.
DWPT	Dynamic wireless power transfer.
EV	Electric vehicle(s).
EU	European union.
EGVIA	European green vehicles initiative association (Related to the european green vehicles initiative roadmap).
EVCS	Electric vehicle charging station.
ICT	Information and communication technologies (In the context of infrastructures).
IEC	International electrotechnical commission.
INCIT-EV	Horizon2020 project name, grant agreement n°875683.

The associate editor coordinating the review of this manuscript and approving it for publication was Derek Abbott.

© 2026 The Authors. This work is licensed under a Creative Commons Attribution 4.0 License.
For more information, see https://creativecommons.org/licenses/by/4.0/

IPT	Inductive power transfer.
IPR	Intellectual property rights.
KPIs	Key performance indicators.
LEV	Light electric vehicles (e.g., e-bicycles and scooters).
mFRR	manual frequency restoration reserve.
MV	Medium-Voltage.
OCPI	Open charge point interface protocol.
OCPP	Open charge point protocol.
PQ	Power quality.
PPPs	Public-private partnerships.
RES	Renewable energy sources.
SAE	Society of automotive engineers.
SFC	Superfast charger.
SiC	Silicon carbide.
SoC	State-of-Charge.
SPS	Series-Parallel-Series (Resonant topology).
TEN-T	Trans-European network - Transport (In context of corridors).
TRLs	Technology readiness levels.
TSOs	Transmission system operators.
UCs	Use cases.
UC1	Netherlands use case.
UC2	Paris use Case 1.
UC3	Paris use Case 2.
UC4	Torino use case.
UC5	Tallinn use case.
UC6	Zaragoza use Case 1.
UC7	Zaragoza use Case 2.
V2G	Vehicle-to-Grid.
V2H	Vehicle-to-Home.
V2V	Vehicle-to-Vehicle.
VPP	Virtual power plant.
WACC	Weighted average cost of capital.
WPT	Wireless power transfer.

I. INTRODUCTION

The INCIT-EV project aimed to demonstrate an innovative set of charging infrastructures, technologies, and its associated business models, ready to improve the experience of EV users beyond early adopters, thus promoting the market share of EV in the EU. The project sought to see the emergence of unconscious preferences of EV users relying on the latest neuroscience techniques to adapt technological developments to subjective expectations of users. Five demonstration environments in urban, peri-urban and extra-urban conditions hosted the development of seven use cases, whose locations and main concepts are presented in Figure 1.

These use cases have been conceived to pursue innovative upgrades in current charging solutions as well as their seamless integration into existing transport, grid, ICT, and civil infrastructures. To facilitate this integration, the project relied on existing e-mobility software solutions to develop the INCIT-EV platform, able to support mobility planners (public authorities, DSOs or TSOs) when choosing the optimum charging systems to maximize the EV deployment at their sites by means of a Decision Support System (DSS). Moreover, with the aim of improving the users' experience and engage them in sustainable mobility solutions, the platform also empowered the users with applications enabling: (1) interoperable direct payment, (2) charging points location, availability and reservation; and (3) smart charging. In this way, the INCIT-EV platform integrated a DSS and a set of applications that address the needs of users and the main stakeholders in e-mobility. Interoperability and grid friendliness were strongly considered throughout the project. The three main highlights with respect to interoperability are (1) the development of the V2G protocol for the Combined Charging System (CCS) increasing from 33% to 63% the number of vehicles with V2G features, (2) the interoperability of static and dynamic wireless power transfer technologies demonstrated in INCIT-EV; and (3) interoperability among payment methods relying on roaming. Regarding the grid-friendliness of the solution, the following ancillary services were considered in the project: demand management, RES integration, reactive power compensation, phase balancing and voltage and frequency control [1]. In addition to the INCIT-EV Platform, the project delivered innovative charging technologies associated to each use case, as well as the following non-technological results: strategies to incentivize different categories of users and stakeholders towards the adoption of EVs technologies and infrastructures; business models and Life Cycle Studies for the seven use cases identified; and regulations and standards recommendations to widen the impact of the proposed innovations along Europe. INCIT-EV contributed to the European Green Vehicles Initiative roadmap by providing demonstrations on a large scale, which were also facilitated by the public authorities involved in the project with the establishment of relevant showcases to gain visibility from customers and citizens. The project coordinator and other consortium partners are members of the EGVIA, ensuring the creation of synergies between INCIT-EV and the projects funded under the Green Vehicles umbrella. Moreover, INCIT-EV is aligned with the objectives of the Alternative Fuel Infrastructure Directive 2014/94/EU, fostering the reinforcement of the charging infrastructure in urban, suburban areas and TEN-T corridors. The overall main goals of the project could be divided into 3 different spokes, each dealing with a specific aspect of the adoption fostering strategies of electric mobility.

The first spoke was the one of technology advancements to be carried through in order to upgrade the options for the potential EV user and all the stakeholders involved in the EV transition. This was done by focusing on 3 points. The first point was to understand the user psychology and deepen the knowledge about users' expectations and concerns regarding EV adoption and charging infrastructure use. INCIT-EV developed a method combining different techniques from the

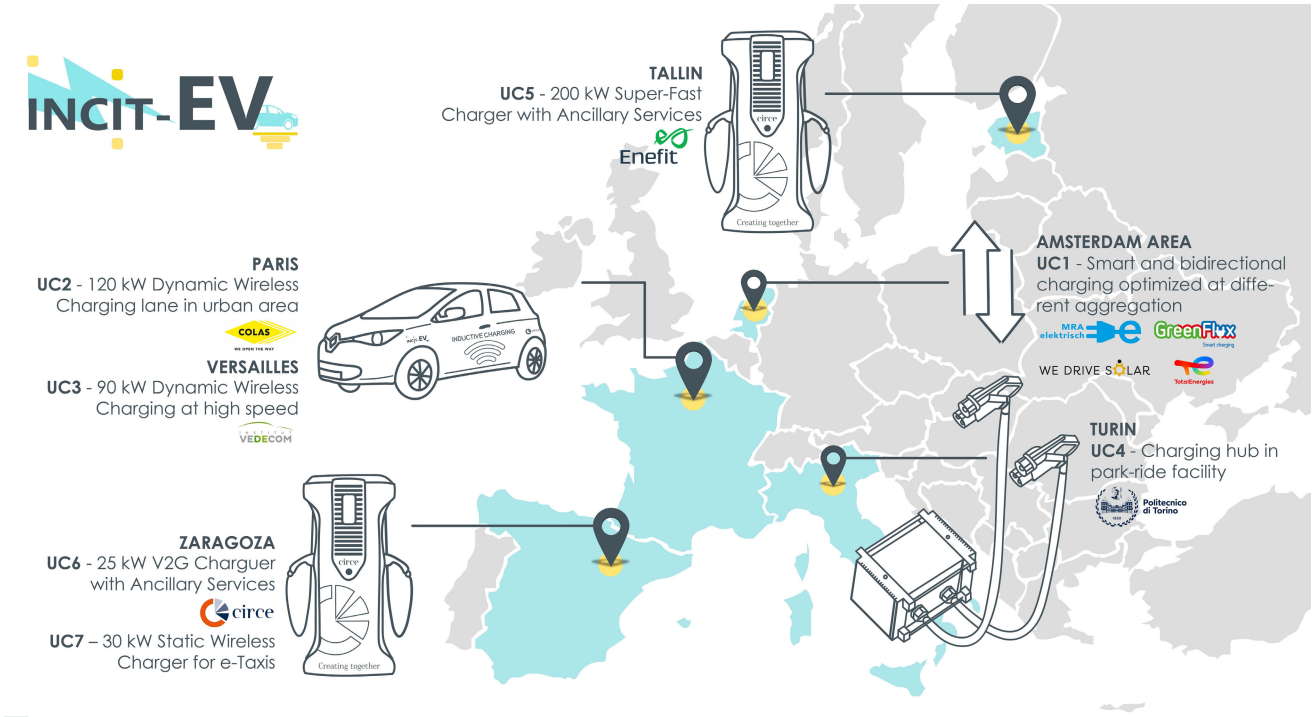

FIGURE 1. INCIT-EV Use cases map. This map illustrates the UCs locations, the demontrated technologies and the logo of the coordinating partner(s) for each UC.

neuroscience, social psychology, mathematical psychology and statistics in order to collect and analyse relevant data in relation to end-users conscious and unconscious expectations and needs. This method helped to establish how the design of the charging infrastructure and related technologies should be adapted to the users' actual demands. Thanks to the advancements in that regard, it was possible to pursue a user-centric approach to carry out the design of innovative and complementary charging solutions for urban, peri-urban and extra-urban areas, targeting mostly private end-users but also mobility services. The main features of the developed charging technologies, mainly characterized by DC architectures, were demonstrated in 7 different use cases spread among 6 cities in 5 countries (Amsterdam, Utrecht, Paris, Torino, Zaragoza and Tallinn). A set of innovative technologies was thus developed during the project. Upgraded high-power DC superfast chargers were engineered, with the Tallinn use case experimenting with a charger able to provide grid services in different demand and power conditions. A scalable EV charging hub for exploiting synergies between different technologies and infrastructures was developed in Torino, Italy. Innovative low power V2X charging infrastructure for EVs allowing energy trading office/home installations was integrated with secure low power DC racks for LEVs like e-bicycles and scooters in the Zaragoza demo site. Opportunity static wireless power transfer charging system for urban environments and dynamic wireless power transfer charging solutions ready for urban environments and electric roads, with specific test methods to ensure their interoperability was setup in the Paris and Zaragoza use cases. Smart charging technologies for optimizing the grid use at regional, community and local levels were a focus in all use cases, with a special mention for the Netherlands use cases. The solutions were designed to satisfy most of the users charging preferences, while ensuring a smooth integration of the charging systems into the existing transport, grid, ICT and civil infrastructures. Furthermore, as third point of the technological innovation delivered by the INCIT-EV project, one must mention the Decision Support System (DSS) intended for public bodies and their electric mobility and city planning needs, developed by LINKS during the 4 years of the project. This software helps to identify how many charging points should be installed and where based on data regarding number of EVs, median distance covered by a car in the city, zones of major interest etc. Figure 2 shows an example of the DSS interface, with the reference year for the data, inputs regarding the number of total trips in the City of Turin and the daily traveled distance percentages for each of the values regarding the distance covered.

The second spoke in which the project focused is the economics of the EV transition process and the assessment of the economic feasibility and attractiveness related to the proposed and tested solutions of the demo sites mentioned above. This process has taken into account the advancements of the EV industry throughout the duration of the project,

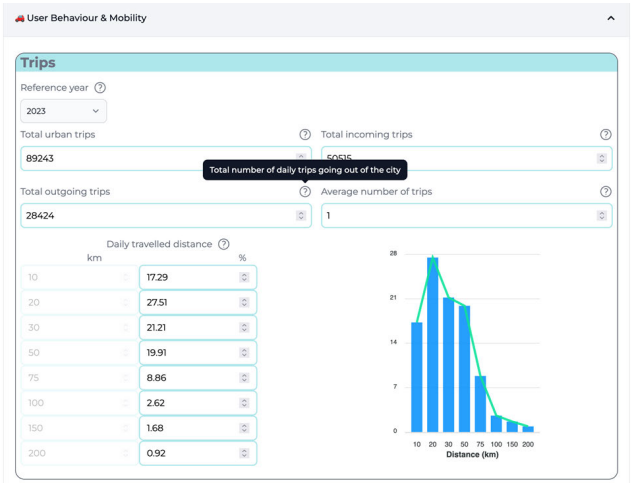

FIGURE 2. DSS analysis menu example. This screen highlights daily traffic data simulation with 89.243 total urban trips, 50.515 total incoming trips and 28.424 total outgoing trips.

as well as competitors in terms of technologies deployed and business models.

The third and final spoke was the research regarding present regulations and standards on the technologies and architectures developed in the use cases. The final output has been a set of recommendations and suggestions regarding lapses or improvements to be made in different areas of current regulation policies inside the EU and also in individual countries. Part of INCIT-EV participants worked actively in national and international standardization committees focused on electric vehicles charging infrastructures, like CEN-CENELEC, IEC or SAE, so the knowledge and ability to actively underline the need for improvements to policy makers has been guaranteed. This article's structure will follow the three spoke approach of the project, highlighting in each chapter one of the aforementioned pillars. Furthermore, the article will focus on the technical development of the technologies presented in the use cases of the INCIT-EV project, and a dedicated section will provide quantitative data. A summary of the lessons learned will complete the document along with an appendix dedicated to the standards involved in the project's proposed technology innovation.

II. PILLAR I-TECHNOLOGY DESIGN FOR ADOPTION FOSTERING: INCIT-EV USE CASES AND THEIR KPIs

The widespread adoption of innovative technologies in electric vehicle (EV) charging infrastructure relies on key factors such as technical feasibility, user acceptance, and seamless integration with existing systems. The INCIT-EV project served as a real-world testing platform for advanced charging solutions, providing valuable insights into both the challenges and opportunities of fostering adoption through technology design, user-centric approaches, and system interoperability. To evaluate different innovative EV charging solutions, multiple demonstration sites were established (see Figure 1, each focusing on specific aspects of charging technology. According to the IEC 61851 standard, wired EV charging process can use either onboard or offboard chargers, depending on the required charging speed. Amsterdam (UC1) investigated AC Mode 3 chargers, which make use of smart demand flexibility and bidirectional functionality within onboard chargers. Meanwhile, the demonstration sites in Turin (UC4), Tallinn (UC5), and Zaragoza (UC6) focused on DC Mode 4 chargers, with UC2, UC3 and UC7 adopting wireless charging. AC mode 3 chargers are conductive chargers characterized by the AC/DC rectification occurring via the vehicle's internal on-board charger, whereas DC mode 4 chargers are defined as conductive charging systems in which an off-board DC charger supplies direct current (DC) to the connected vehicle battery. Typical operation of AC mode 3 chargers is at 230 V or 400 V with current ratings up to 32 A, resulting in standardized power outputs of 7.4 kW, 11 kW, or 22 kW. DC mode 4 chargers on the other hand do not have vehicle spatial and thermal constraints and enable currents up to 400A, resulting in power outputs ranging from 50kW to 350kW and beyond. The more sophisticated onboard chargers have bidirectional capabilities thanks to their topology and the interaction with the ISO 15118-20 and the OCPP 2.0.1 communication protocol. The four-quadrant converter design featured in such onboard chargers includes bidirectional AC/DC and DC/DC conversion, enabling both charging and discharging function. This feature, combined with the communication between the vehicle and the grid results in Smart Demand Flexibility, where the vehicles are an integral part of the grid architecture. Each demonstration site explored different approaches to integrate EV charging with the power grid. Tallinn (UC5) and Zaragoza (UC6) investigated how DC charging can interact with the grid and provide grid support services. DC mode 4 charging enables grid interaction thanks to the charging infrastructure topology, as the AFE (Active Front End) SiC Mosfet full bridge configuration and the ISO 15118-20 operate to enable the battery discharge and conversion to AC, with the AFE acting as inverter. This bidirectional capabilities unlock peak-shaving opportunities thanks to the EV discharge potential, but this aspect was not central during the INCIT-EV testing activities. In contrast, UC4 (Figure 3) in Turin leveraged the existing unidirectional tramway power infrastructure to support EV charging, offering a solution to mitigate the increasing demand on urban grids while optimizing available energy resources. This operation was done thanks to a direct connection to the tramway DC grid: one cabinet provides the power connection to the omnibus bar powering the tramway lines and the surge protection that comes in the form of a railway application circuit breaker with a manual disengage system for sectioning purposes - just like the other circuit breakers already present in the Caio Mario substation for each of the tramway lines that it powers - while another cabinet distributes the energy in regulated voltage to the power converters that convey the energy into the 10 low-power CCS2 charging points and the 1 ultrafast 150kW CCS2 charging point. The testing activities

demonstrated that there was no power issue even during critical traffic hours, and the substation actually benefited from the peak shaving potential of the EV charging loads, as Torino's tramway grid can be subject to overvoltages. To successfully complete the development of the chargers, it was essential to initially use a vehicle simulator, the VTSYSTEM from Vector, that allowed for debugging of the converter's state machines and facilitated the development of communication with the vehicle. After the successful completion of the preliminary tests, the low power charging tests shifted successfully towards maximum charging power (3.6kW), thus fulfilling one of the expected results of the demonstrator.



FIGURE 3. UC4 at torino's demonstration site: charging hub in a park and ride facility in torino.

The attention shifted then to sessions dedicated to the the ultrafast charger (150kW). The approach on this topic was to test single 50kW modules in their functioning, and then proceed to let them work in parallel thus reaching the expected power. The single 50kW modules testing were followed by debugging the communication between the modules, thus slowing the testing process. The testing campaign was able to reach more than the single 50kW module power, recharging the Opel eCorsa up to its maximum power rate of 80kW.

The Tallinn demonstration site UC5 (Figure 5) focuses on addressing peri-urban EV charging challenges, particularly the integration of superfast charging systems to provide ancillary grid services and assess grid impact. To achieve this, an Electric Vehicle Charging Station (EVCS) based on SiC semiconductor technology was developed and tested within a Virtual Power Plant (VPP) framework. A power quality



FIGURE 4. Charging session with detail of the container housing the cabinets and the 150kW power electronics.



FIGURE 5. UC5 at Tallin's demonstration site: Superfast charging systems for EU corridors.

(PQ) analyzer in the substation monitored the impact of the charging system on the medium-voltage (MV) feeder. The reactive power adjustment of the Superfast Charger (SFC) influenced the measured values of the substation. When the reactive power setpoint is applied to the SFC, the reactive power level is modified at the substation measurement point. During testing, the results demonstrate the ability of the system to compensate for reactive power, a key feature to stabilize grid operations. The results of the VPP testing confirmed that the charging process can be adjusted in response to an mFRR downmarket activation message, with a delay of approximately 5 seconds, which meets the requirements of mFRR (manual Frequency Restoration Reserve). Once activation ended, the system automatically resumed normal charging operations, continuing to charge the vehicle battery as expected. During reactive power control tests, adjustments of 200 kVar resulted in modifications to line-to-line voltages ranging from $+2.9\%$ to -2.6%, while line-to-neutral voltage variations ranged from $+0.6\%$ to -1%. These findings indicate that the system can dynamically manage active and reactive power based on

real-time grid conditions, reducing grid stress, optimizing energy distribution, and enhancing overall grid resilience, while also minimizing operational costs.

Another key KPI in the Tallinn demonstration was SFC efficiency at different charge levels. The measured efficiencies were 86.37% at 20% of maximum DC power and 95.63% at 80%. These results confirm that the Tallinn charging system not only provides fast and efficient energy transfer but also contributes to grid stability through reactive power compensation and smart energy management, making it a viable solution for future peri-urban EV charging networks. The Zaragoza UC6 (Figure 6) demonstration site focuses on the adoption of bidirectional DC charging technology (V2G and V2V), which was assessed through various KPIs, including energy efficiency, interoperability, and regulatory compliance. The bidirectional charger, developed using SiC semiconductor technology, demonstrated an efficiency of 96.94% for charging and 95.69% for discharging, highlighting its high efficiency and potential for grid support services. To evaluate interoperability, bidirectional charging and discharging operations, as well as V2V energy transfer, were tested in different charging protocols. Full bidirectional functionality was successfully validated with CHAdeMO vehicles, while V2V energy transfer was tested between CHAdeMO and CCS vehicles, involving different battery technologies and state-of-charge (SoC) voltage levels. However, the lack of commercially available CCS-V2G vehicles significantly limits real-world applications, highlighting the urgent need for industry-wide standardization to facilitate greater adoption. During testing, the efficiency of battery energy storage within the CHAdeMO vehicle was found to be 95.88% on average for the 80-85% SoC range. When considering the entire charge-discharge cycle, including AC/DC and DC/DC conversions, battery storage efficiency, and energy losses through cables and connectors between the EV and the EV charging station (EVCS), the overall efficiency of the system was 88.94%. These results confirm that bidirectional charging technology is highly efficient, making it a viable solution for grid flexibility. This capability is particularly significant in energy systems with a high penetration of renewable energy sources, where bidirectional electric vehicle charging can play a crucial role in stabilizing the grid, managing demand fluctuations and enhancing energy storage solutions.

Similarly, INCIT-EV enables the large-scale deployment of wireless charging technologies by exploring different use cases. UC7 focuses on stationary charging applications in urban areas, such as queuing areas at transport hubs (e.g., train stations or airports). Dynamic charging applications are also covered. Applying Dynamic Wireless Power Transfer (DWPT) technology on the urban environment, UC2 explores synergies with public transport infrastructure. An alternative approach to dynamic charging is oriented towards high-speed motorway conditions and is addressed by UC3. In order to demonstrate interoperability, the three ground-side proposals



FIGURE 6. UC6 at Zaragoza's demonstration site:: Low power DC bidirectional charging infrastructure for EVs.

were tested in conjunction with the secondary system developed within the framework of the INCIT-EV project, which was successfully installed and tested in three different vehicles: a Renault Zoe, a Renault Master and a Stellantis DS3. The UC7 system, part of Zaragoza demonstration site (Figure 7), is a 50 kW Inductive Power Transfer (IPT) wireless charger designed for opportunity charging in urban environments. Especially convenient on public transport, it allows avoiding service interruptions, taking advantage of stop periods, and decreasing the battery required sizes [2]. The developed charging station allows for variable power transfer up to 50kW, overcoming the power transfer classes defined at the time by SAE J2954. Considering the average Renault ZOE consumption (41 kWh battery capacity for 300 km range autonomy), the developed system is able to charge 1.66 kWh in 2 minutes, allowing the car to drive for 12 extra kilometers. It features communication-free interoperability by establishing a primary current-based control that acts on the inducted voltage of the secondary side and delegating the power control to the secondary side. The charging station employs a Series-Parallel-Series (SPS) resonant topology, which enhances efficiency, stability, and tolerance to misalignment, preventing excessive current draw under misaligned conditions and enabling the use of simpler, cost-effective coil geometries [3]. The primary coil hardware design follows that premise by being based on a one-turn Litz-wire winding combined with aluminum shielding and a ferrite plate. Additionally, a dielectric oil-based cooling system ensures thermal stability under high-power operation, making the system a reliable and scalable solution for urban EV wireless charging [4]. The test campaign of UC7 demonstrated successful static power transfer, efficiency, and interoperability. Power transfer tests at laboratory in 0% misalignment and nominal air gap conditions confirmed that, by establishing 226.75A at primary coil, the system could deliver up to 27.28 kW to a resistive load on a secondary system test bench-based setup, reaching the battery voltage threshold and showing an efficiency of 85% from the primary DC bus to the load. Demonstration site tests validated real-world operation, achieving 28.67 kW transfer and 82.8%



FIGURE 7. UC7 at zaragoza demonstration site: electronic and cooling system cabinets and charging area.

efficiency at 71.5 kHz and 0% misalignment, with reduced primary coil current (200A) compared to lab conditions. Static mapping tests confirmed an efficiency greater than 78% under the required misalignment range (±10 cm from centered position), verifying its interoperability with the secondary system integrated into the Renault Zoe [5].

At the demonstration site in Paris (see Figure 8), a 30 kW electric vehicle charger was developed utilizing a DWPT system, constituting UC2 (see [6] and [7]). This technology enables the reception of electrical power by electric vehicles while running along a road, thereby preserving or augmenting the vehicle's internal battery charge and consequently, offering enhanced autonomy and enabling the reduction of battery size requirements. Presently, the average range of electric vehicles available in the market spans from 150 to 400 kilometers, considerably less than the range of traditional internal combustion vehicles, which exceeds 1000 kilometers. The widespread of DWPT electric roads could achieve an unrestricted range for electric vehicles, reducing the battery requirements to cover transitions between electrified roadways. The DWPT systems operate on the foundational principle of electromagnetic induction, wherein energy is transmitted from sequential primary coils embedded in the ground to a secondary coil embedded within the vehicle. The system incorporates primary coils deployed along the roadway, which are energized by DC/AC converters connected to a DC bus.

Experimental investigations have demonstrated the functionality of the UC2 DWPT system using a DS3 Crossback vehicle from Stellantis and a ZOE vehicle from Renault, facilitating vehicle recharging of up to 30 kW under dynamic conditions. The results exhibit a peak efficiency of 90.6% from the DC bus on the primary side to the battery along the roadway, underscoring the robustness and efficacy of the system. These experiments have further validated the system's capacity to maintain power and voltage stability amid varying coupling coefficients. A sequencing technique is elucidated for the selection and activation of primary coils based on current induced at secondary coil, accounting for the motion and potential misalignment of the secondary

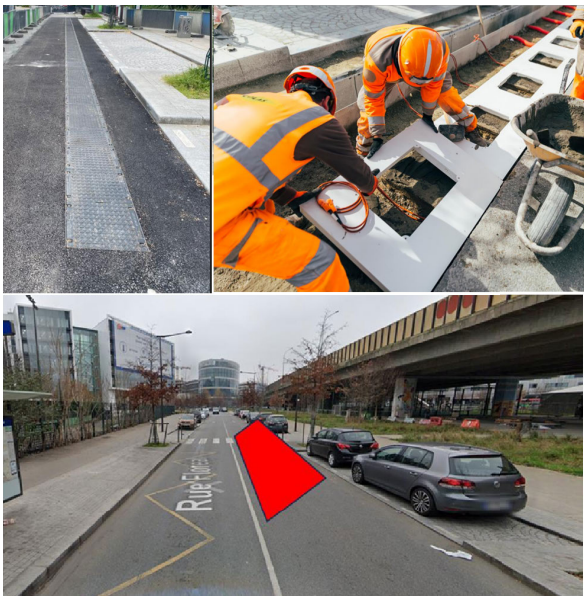

FIGURE 8. UC2 at Paris site: DWPT, site location (bottom), coils installation (right), work achieved (left). Highlighted in red, the area where the coils have been installed.

coil without reliance on sensor presence or timing methods. This methodology has permitted the selective powering of coils directly engaged in vehicle charging at any given moment, thereby mitigating losses and curtailing unnecessary power transmission. Additionally, a control scheme was developed to accommodate varying vehicle speeds, positions, and heights during operation. This scheme has optimized power delivery and ensured the soft-switching of power electronic components, thereby enhancing overall efficiency and ensuring a seamless transition between coils. The UC3 system addressed the interurban application of the DWPT technology. The solution, designed for long-range electric vehicle charging, has been implemented on an 87-meter track in Versailles-Satory (Figure 9). The charging track features 10-m-length coreless shielding-less elongated coils, designed for minimizing the number of supplying converters, achieving cost-effectiveness, simplified installation and quasi-continuous power transfer [8], [9]. The primary system is based on a SPS resonant topology, achieving stable power transfer in the defined lateral misalignment range [10].



FIGURE 9. UC3 at Versailles demonstration site: partial view of the charging track and one of the supply cabinets.

Similarly to the UC7 proposal, the charging track requires no communication with the vehicle and the action over the secondary side is controlled by establishing a constant current at track coils and regulating the primary side supply to the power demanded by the secondary side. The UC3 simplified infrastructure reduces installation complexity and maintenance costs, while the design allows vehicles to charge at speeds of up to 90 km/h, making it a scalable and practical solution for electric road systems [4]. The UC3 tests validated the proposed system, achieving 30.25 kW power transfer to a resistive load in static mode and 24.15 kW when charging an EV battery. Efficiency reached 80% in the simplified setup installed in Zaragoza but dropped to 70% in the full-scale demonstrator due to increased primary coil losses. The system operated stably at 74.1 kHz with a primary coil current in the range of 286-295 A and inducting a secondary DC voltage range of 390-515 V. Effective power transfer was maintained within a ± 7.5 cm lateral misalignment range, requiring at least 87.5% coils overlap [11]. Challenges included higher-than-expected coil losses and efficiency variations due to environmental factors [12]. Overall, the system demonstrated high interoperability and reliability, but further refinements in coil integration and optimization are needed for large-scale deployment.

A. FURTHER USE CASE TECHNICAL DETAILS

UC1's objective was to deploy innovative bidirectional charging, and the engineering phase resulted in an operational smart charging ecosystem established by the CPO TotalEnergies and platform provider GreenFlux, which uses an advanced algorithm to disaggregate load forecasts over approximately 120 charge points in the City of Haarlem. This system was optimized for the demonstration phase after testing showed a negligible amount of complaints from EV drivers. The system is configured to manage congestion with Distribution System Operator (DSO) input via the GOPACS platform. UC1b, "Community bidirectional charging," demonstrates Vehicle-to-Grid (V2G) Charging in an active community in Odijk. This solution uses open protocols (OCPI, OCPP, and ISO 15118) to link a car-sharing platform (GoodMoovs mobile app) with the energy market, allowing the system to use EV batteries as a virtual battery to reduce electricity network congestion, respond to energy prices, and maximize renewable electricity use. The bidirectional ecosystem is moving toward full operation with the integration of the Hyundai IONIQ 5, described as the world's first series-produced AC-V2G car. UC1c, "Local private shared smart charging," addresses the complex technical and organizational challenges of integrating charging infrastructure into collectively owned residential buildings, particularly in owner associations. The organizational innovation involved developing a methodology, webinars, and a quick scan approach to help owners associations gain support for installation, while the technical aspect focused on achieving proper integration solution, including Dynamic Load Balancing. UC2, located in Paris, had the goal to demonstrate wireless charging. The primary coils were developed by VEDECOM, and are rectangular in shape with Litz cable loops, ferrite elements, and a composite casing, each measuring 120 mm long, 740 mm wide, and 65 mm high. These coils are integrated into the asphalt pavement by partners UGE and COLAS. The power is supplied by ENEDIS via an AC/DC with a Power Factor Converter, with the charging power available set at 119 kVA. The grid connection required dedicated aluminum cables (150 mm^2 section) laid 90 cm below ground level over a 30m length track. The inverters that drive the ground coils are placed inside a technical ground trench and locked with cast iron covers.

The vehicle's induced AC voltage is rectified and transferred to a DC/DC charger to charge the EV battery. The charging station operation is managed by a common communication system developed by VEDECOM and based on the ISO 15118 standard. UC3 showcased the Dynamic Wireless Power Transfer (DWPT) system for the Versailles peri-urban area (UC-3), specifically designed for long-range trips on high-speed roads. The key challenge was developing a second, highly cost-effective inductive primary system (roadside) that was interoperable with the secondary system equipping the retrofitted vehicles for the lower-speed UC-2 demonstration. The system was implemented on a track at Versailles Satory, featuring an 87-meter long charging segment. The primary system, developed by CIRCE, consists of 8 coils, each measuring 10 meters in length. This elongated coil design was chosen to minimize the number of supplying converters required, aiming for cost-effectiveness and simplified installation. The power electronics converters were also developed in conjunction with the primary coils. The deployment methodology involved starting with simulations, progressing to design, small-scale testing in Zaragoza, and culminating in the full-scale implementation at the Versailles site.

Key technical status and performance data achieved during the static testing phase included a successfully achieved Static power transfer using a Renault Master vehicle, confirming the initial possibility of interoperability between the UC-3 ground assembly and the common INCIT-EV secondary system. The system was validated to be able to deliver power to the vehicle despite the complexity due to the high level of system integration and the novelty of addressing DWPT system interoperability. The successful achievement of static power transfer validates the possibility of interoperability, but further work is explicitly stated as being needed to achieve reliable dynamic power transfer at the site. The finalization of the engineering and commissioning activities allows the project to move to the operational phase to further characterize the system's dynamic performance. In UC4, directly derived from the busbar, the new feeding line for EV charging powers the charging infrastructure. The 22kV AC input of the tramway substation was not directly part of the EV charging investigation because of its strategic

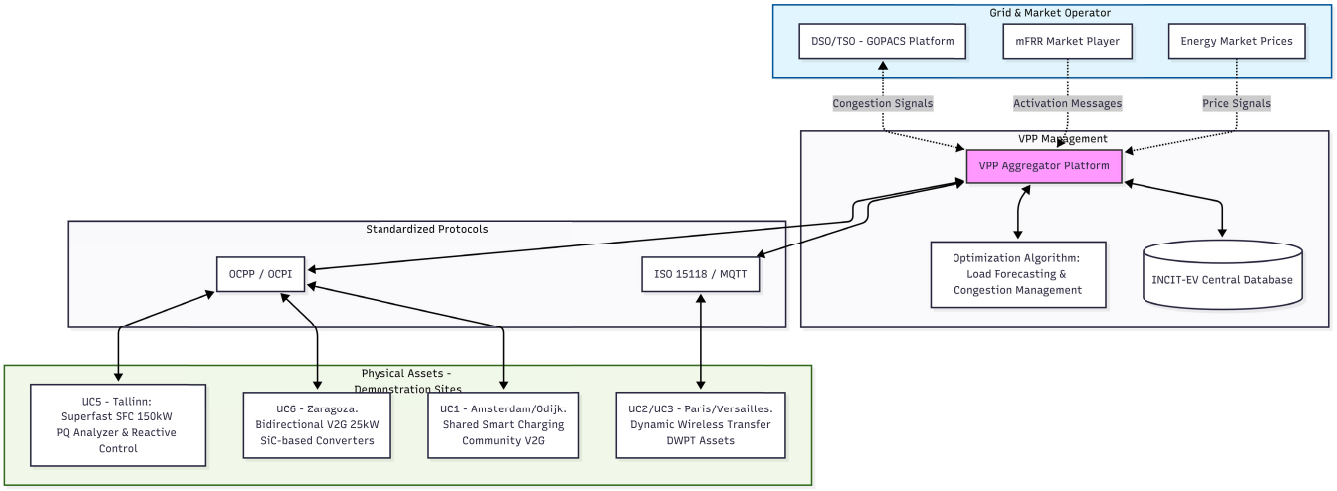

FIGURE 10. Virtual power plant diagram of all use cases.

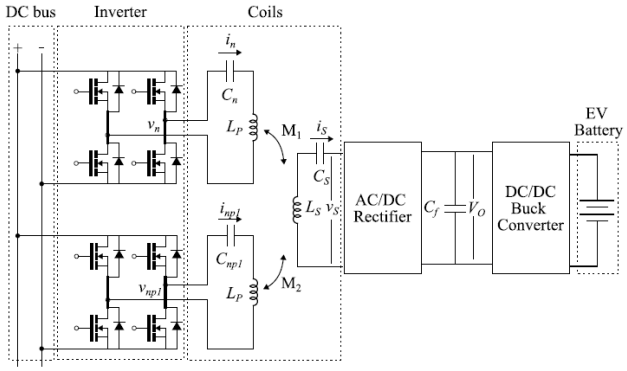

FIGURE 11. Circuit of DWPT system.

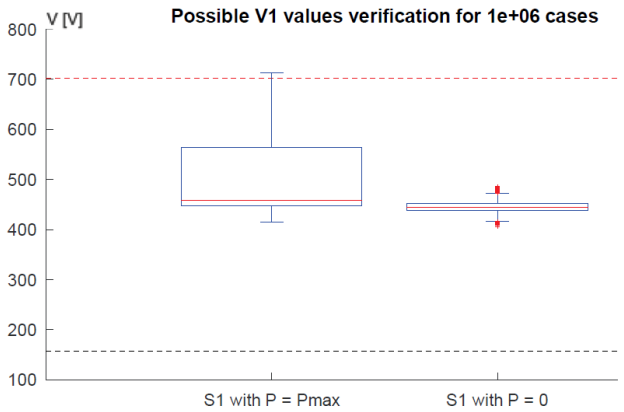

FIGURE 12. DC/AC output voltage for maximum and zero output power.

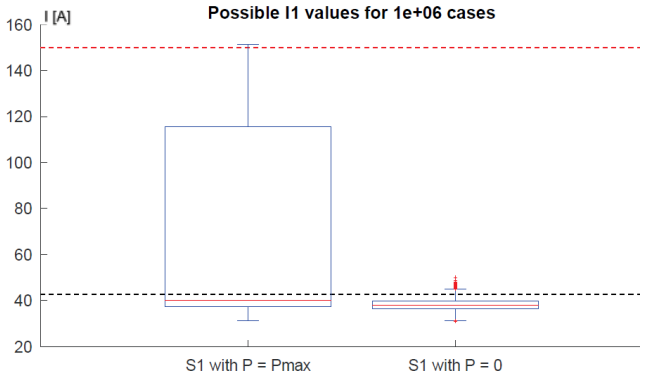

FIGURE 13. DC/AC output current for maximum and zero output power.

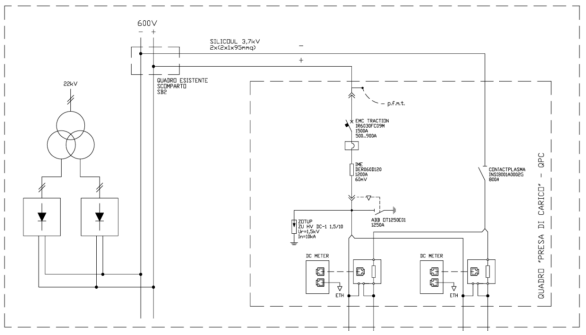

FIGURE 14. Electric scheme of a Torino tramway conversion substation line.

importance by city authorities that restricts access to data and physical access to the infrastructure. For the connection to the busbar of the substation, a circuit braker, voltage surge suppressors with a discharge voltage of 1200V and disconnectors have been installed for safety reasons. Four isolated DC/DC converters of 50 kW each are supplied from the circuit breaker.

Three of these form the heart of the 150kW charger while the fourth to which the output of all 3.6kW chargers is connected acts as a voltage regulator so as to maintain the output voltage at 500V. The DC/DC are able to work with a voltage input 500-950V. This range is due to the fact that the tramway network allows from standards to have large

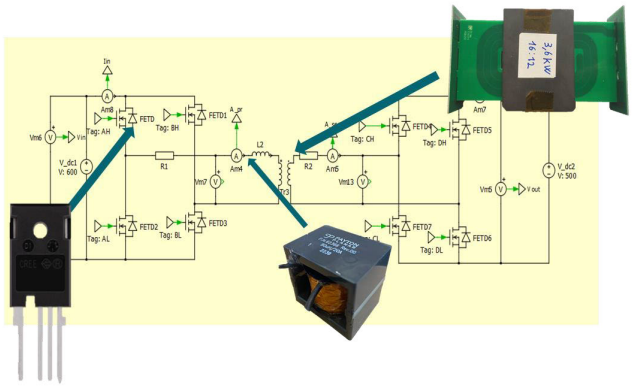

FIGURE 15. DAB topology as applied in UC4.

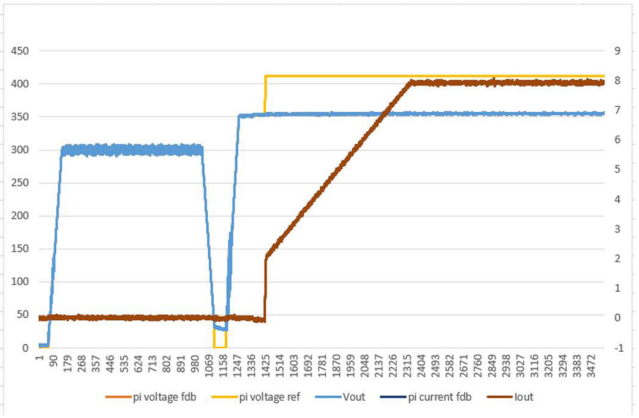

FIGURE 16. Start of a charging process.

TABLE 1. Technical specifications of the low-power bidirectional converter.

Parameter	Value
Input DC Voltage Range [V]	450 – 550
Input Current [A]	8
Output DC Voltage Range [V]	50 – 500
Maximum Output Current [A]	9
Nominal Power [kW]	3.6
Peak Efficiency [%]	>98 (full load)
Communication Protocols	Ethernet, CAN
Topology	Bidirectional (V2G suitable)
Electrical Protections	Input/Output Overcurrent & Overvoltage
Thermal/Misc. Protections	Overtemperature, Fan, Precharge
Operating Ambient Temperature [°C]	-25 to +60
Operating Humidity [%]	0 – 95 (no condensation)
Dimensions (H × W × D) [mm]	310 × 310 × 500
Weight [kg]	<40
Protection Rating (Internal/External)	IP67
Maximum Altitude [m]	1000 (without derating)
Cooling System	Natural convection (Heatsink)
Standby Consumption [W]	<15

TABLE 2. Technical specifications of the 50 kW high-power bidirectional module.

Parameter	Value
Input DC Voltage Range [V]	600 – 900
Input Current [A]	Up to 95
Output DC Voltage Range [V]	50 – 500 / 50 – 1000
Maximum Output Current [A]	125
Nominal Power [kW]	50
Peak Efficiency [%]	>97 (full load)
Communication Protocols	Ethernet, CAN
Topology	Bidirectional, isolated
Electrical Protections	Input/Output Overcurrent & Overvoltage
Thermal/Misc. Protections	Overtemperature, Fan, Pre-charge
Operating Ambient Temperature [°C]	-25 to +50
Operating Humidity [%]	0 – 95 (no condensation)
Dimensions (H × W × D) [mm]	950 × 375 × 220 (air cooled)
Weight [kg]	<65
Protection Rating (Internal/Enclosure)	IP20 / IP54
Maximum Altitude [m]	2000 (@1500V) / 4000 (@1000V)
Cooling System	Forced air cooling
Standby Consumption [W]	<30

voltage fluctuations. The output voltage range of each DC/DC are 250-500V, and with a current up to 62.5A. The design of the DC/DC in order to minimize the reactive elements required for the isolation stage work with high switching frequencies up to 80kHz, so SiC MOSFETs were chosen as the semiconductor technology, as they allow for very good performances thanks to the high switching frequencies and the voltage and current levels in which the converter operates. The communication between vehicle and charger, and more specifically between EVCC and SECC, complies with iso 15118, with PWM and PLC communication. Communication between SECC and the power electronics is via CAN. The chosen structure for the development of the low-power converters was the dual active bridge (DAB) that allow bidirectional power flow and high efficiency to due the soft switching capability. In figure the DAB converter with highlight the principal component (add figure from D8.9)

For the control side the digital dual loop control is used, with a inner current loop and a external voltage loop the work to manage the first step of the charging as the cable check and the pre-charge. During the charge the volage loop is saturated at the current limit send by the EV. This because the target of voltage became equal to the maximum voltage level of the battery. In the figure below is shown the start of a charger. It is possible to note the inrush current when the EV close the contactor is very low and below the standard.

For the 50kW converter modules the same procedure is used. The topology chosen is a dual active bridge but instead of the discrete active component a power module in SiC is use to increase the power density.

The figure below shows the electrical diagram of the SFC tested in UC5. It is composed of 4 AFE and 4 isolated 50kW DC/DC converters each.

The electrical scheme of the AFE design is shown below. It is formed by 3 branches of SiC technology mosfets, to be able to increase the working frequency and reduce the power filter.

Within the control segment, the Switched-Mode Power Supplies (SMPS) are incorporated to provide the requisite voltage levels. Additionally, a control card, equipped with a Texas Instruments Digital Signal Processor (DSP), undertakes the task of overseeing the management of power electronic control. Conversely, the electronic power component is comprised of two contactors within the SFC. The first contactor, characterized by lower power capacity, is responsible for initiating preloading of the DC bus by

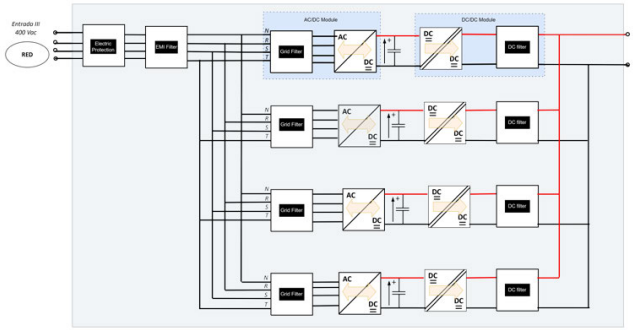

FIGURE 17. Electrical diagram of SFC.

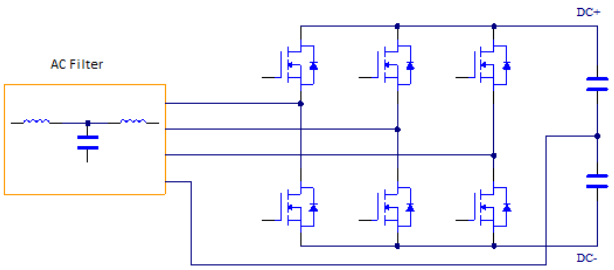

FIGURE 18. The electrical scheme of AFE.

utilizing a resistor. The primary contactor, on the other hand, establishes the connection between the SFC and the grid. The AC/DC converter part and filter is formed by several PCBs where the Mosfet SiC are welded with the trigger and control drivers, the necessary measures are also made for the control and another filtering PCB along with the three inductances that can be observed. In the figure below, the final mounting of the AFE rack is represented.

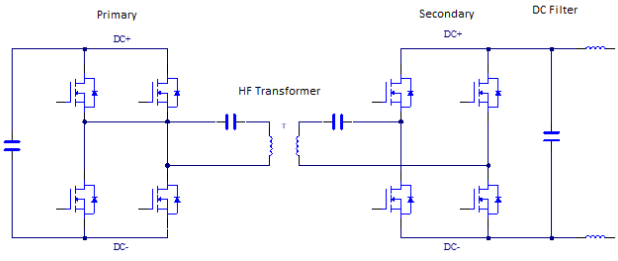

FIGURE 19. DC/DC electrical scheme.

The primary focus of UC6 was the development and deployment of a sophisticated 25-kW conductive EV charger capable of providing advanced Vehicle-to-Grid (V2G) services. This charger features a multi-standard interface managing both CHAdeMO and CCS protocols. The core of the EV charger is its bidirectional converter topology, which is specifically based on the utilization of high-frequency Silicon Carbide (SiC) semiconductor technology. This choice was strategic, enabling very high switching frequencies and thereby significantly increasing the power density while reducing the size of the required passive components (magnetics and capacitors). The converter topology employs three active phases and utilizes the capacitor mid-point to provide a neutral current return path, granting the system the capability to effectively manage active and reactive unbalanced currents irrespective of whether vehicles are connected. The charger's power allocation allows for an output per vehicle ranging from 7.4 kW to 22 kW. Hardware commissioning successfully validated the wiring, power connections, and contactor operation.



FIGURE 20. EV Charger Hardware and enclousure.

The UC6 site also integrated a secondary solution: a two-wheeled EV charging station with thief-proof lockers, which is physically and electrically connected to the main 25-kW unit. This low-power module provides charging power ranging from 120W up to 3.4 kW to service multiple bikes simultaneously. Communication for both charging solutions is consolidated through a 4G router, which facilitates connectivity to the INCIT-EV cloud platform using the MQTT protocol. Testing was conducted systematically, progressing from individual AC/DC and DC/DC unit tests to full EV integration, including scenarios using one DC/DC unit and two parallel DC/DC units, confirming the robust design and operational readiness for the V2G demonstration phase.

To summarize, In a test setup with a resistive load and 0% misalignment, the system confirmed the capability to deliver up to 27.28 kW to the load, with an efficiency of 85% measured from the primary DC bus to the load. This required establishing a primary coil current of 226.75 A. The system achieved 28.67 kW transfer and an efficiency of 82.8% at an operating frequency of 71.5 kHz with 0% misalignment, using a slightly reduced primary coil current of 200 A. UC7 in Zaragoza aimed at developing and testing a 50 kW Inductive Power Transfer (IPT) wireless charger designed for opportunity charging. The charging station employs a robust Series-Parallel-Series (SPS) resonant topology, strategically chosen to optimize stability, system efficiency, and lateral misalignment tolerance at this high power level. The meticulous coordination and monitoring of civil works

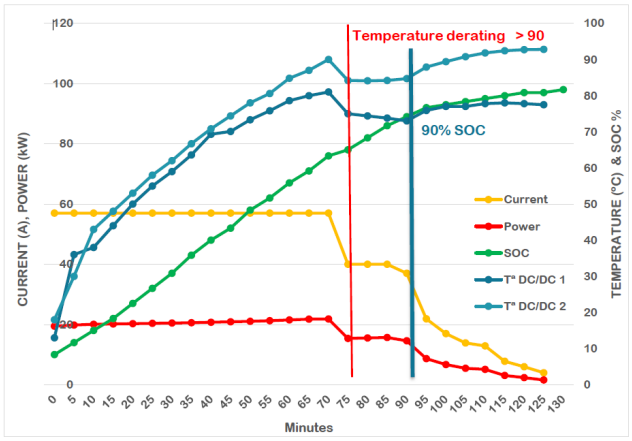

FIGURE 21. UC6 25kW EV full charge and performance test.

were underscored as essential due to the high environmental sensitivity characteristic of inductive applications.

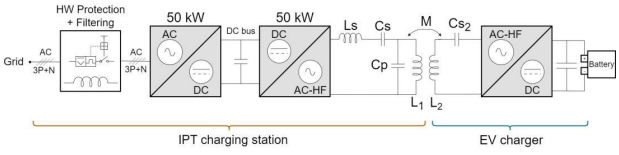

FIGURE 22. UC7 OWPT 's block diagram.

Quantitative results from the testing phases confirmed high-performance metrics. During laboratory testing with a resistive load and 0% misalignment, the system demonstrated a maximum power transfer of 27.28 kW to the load. This transfer was achieved with a primary coil current of 226.75 A and yielded an impressive efficiency of 85% measured from the primary DC bus to the load. Real-world validation at the demonstration site showed comparable performance, achieving 28.67 kW transfer and an efficiency of 82.8% at the operating frequency of 71.5 kHz under 0% misalignment, utilizing a slightly reduced primary current of 200 A.

Static mapping tests confirmed the system's resilience to positional errors, maintaining an efficiency greater than 78.8% across the required misalignment range of ±10 cm from the centered position, thus verifying its interoperability with the 30 kW receiver system integrated into the Renault ZOE. The successful completion of these technical phases validates the primary side system's design and compatibility with the common secondary system developed within the project.

III. PILLAR II-ECONOMIC FEASIBILITY OF INNOVATION IN EV CHARGING: INFRASTRUCTURE AND BUSINESS MODELS ASSESSMENT

The INCIT-EV demonstration sites provide valuable case studies in understanding how technology design influences adoption in diverse urban and peri-urban contexts. While advancements in efficiency, interoperability, and smart grid

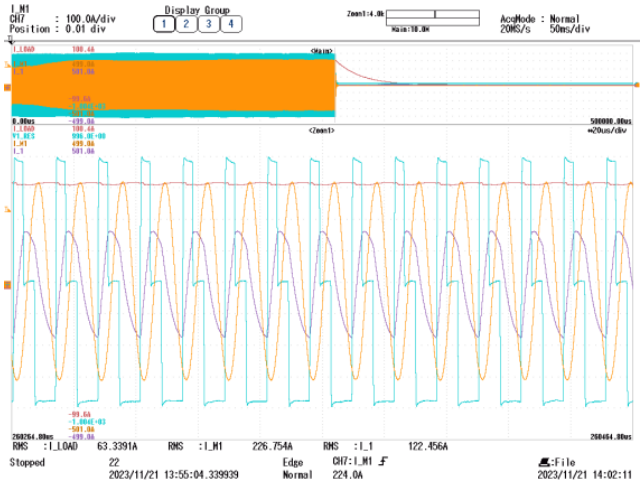

FIGURE 23. Oscilloscope screenshoots of laboratory tests coupling secondary coil. Blue: DC/AC output voltage, orange: primary coil current, purple: DC/AC output current, Red: current supplied to load.

integration have been significant, challenges persist in standardization, economic viability, and user acceptance. To drive widespread adoption, a comprehensive strategy must address these barriers by implementing supportive regulatory frameworks, financial incentives, and continuous user engagement. This approach will ensure that innovations in EV charging infrastructure deliver tangible societal benefits. Additionally, the INCIT-EV project assesses the financial feasibility of cutting-edge EV charging technologies—including bidirectional charging (V2G/V2H), cooperative charging, and dynamic wireless power transfer (DWPT)—and examines the business models that support their large-scale deployment. The evolution of EV wired charging infrastructure has been classified into four levels: grid-compliant charging (Level 0) ensures compliance with existing regulatory frameworks but lacks advanced control mechanisms; controlled charging (V1G) (Level 1) allows demand-response flexibility, enabling grid operators to manage charging power remotely; cooperative charging (V1G/H) (Level 2) integrates market-driven incentives, allowing for dynamic pricing and time-shifted charging; bidirectional charging (V2H/V2G) (Levels 3 & 4) enables energy transfer from EVs to homes (Level 3) or the grid (Level 4), offering grid stabilization and potential revenue streams. The financial sustainability of EV charging innovations is contingent upon the development of robust business models that ensure long-term profitability and widespread adoption. The INCIT-EV report identifies several approaches that can support this goal. Subscription-based models provide users with access to charging networks for a fixed monthly fee, guaranteeing stable revenue for operators. Alternatively, pay-per-use models charge users based on their energy consumption, offering flexibility but requiring competitive pricing to attract customers. Vehicle-to-Grid (V2G) revenue-sharing models offer EV owners the opportunity to earn compensation by supplying

TABLE 3. Comparative analysis of INCIT-EV charging technologies: trade-offs and strategic application scenarios.

Technology / UC	Advantages	Disadvantages	Target Scenario
Smart Urban Charging (UC4 - Turin)	Integration with existing DC grids (tram/metro); reduced infrastructure costs; high efficiency SiC converters (>98%).	Dependence on public transport grid stability; limited to specific urban areas.	Brownfield urban areas with existing DC rail infrastructure.
Superfast Conductive (UC5 - Tallinn)	Ultra-rapid energy transfer; 5s response time for mFRR grid services; high peak efficiency (95.63%).	Significant grid stress during peak; requires high-power grid connection (MV/LV).	Highway corridors and peri-urban high-frequency hubs.
Bidirectional V2G (UC1, UC6)	Active grid balancing; local congestion relief; potential ROI for EV owners via flexibility markets.	Accelerated battery aging (cycling); requires standardized V2G communication (ISO 15118).	Residential complexes, corporate parking, and car-sharing hubs.
Stationary Wireless (UC7 - Zaragoza)	Superior user convenience; high resilience to environmental factors; 82.8%–85% efficiency.	High sensitivity to coil misalignment; higher CAPEX compared to conductive AC.	Taxi stands, bus terminals, and "opportunity charging" spots.
Dynamic Wireless (UC2, UC3)	Continuous charging while driving; allows smaller EV batteries; high highway throughput.	Extreme infrastructure complexity; efficiency drops (to 70%) at high speeds (90 km/h).	Long-distance electrified motorways and urban transit lanes.

energy back to the grid, thereby enhancing the economic appeal of bidirectional charging. Public-private partnerships (PPPs) play a vital role by facilitating collaboration between governments and private investors, which accelerates the deployment of charging infrastructure, particularly in high-traffic urban areas. Furthermore, dynamic pricing strategies leverage real-time electricity pricing to adjust charging costs based on grid demand, thereby improving cost recovery and optimizing efficiency. The economic feasibility of these models depends on multiple factors. One of the primary considerations is infrastructure cost, as the installation of bidirectional charging stations and wireless power transfer (WPT) systems requires additional investment. Another critical factor is energy market integration, particularly for V2G models, which require regulatory adjustments to enable EVs to participate in energy trading. The rate of user adoption also influences economic viability, as widespread participation in cooperative charging or V2G services is necessary to achieve profitability. Additionally, these technologies contribute to grid stability, benefiting utilities through improved load balancing and frequency regulation, which can reduce overall operational costs. On the other hand, intellectual property rights (IPR) play a fundamental role in maintaining a competitive edge in the evolving EV charging landscape. A key aspect of the innovation strategy involves patent protection for novel technologies, ensuring exclusivity and differentiation in the market. Industry collaboration is equally important, as fostering partnerships can lead to technological standardization and improved interoperability across different systems. European funding programs offer another avenue for supporting research and commercialization efforts, helping accelerate the adoption of advanced charging solutions. The economic feasibility of innovative EV charging infrastructure depends on a delicate balance between technological advancements, business model evolution, and regulatory adaptation. Although high initial investment costs remain a challenge, the integration of revenue-sharing mechanisms, market-driven incentives, and grid optimization strategies significantly improves the viability of bidirectional and cooperative charging technologies. A well-defined innovation and IPR strategy will further reinforce industry growth, facilitating the transition towards a sustainable and economically viable EV ecosystem. As mentioned, the INCIT-EV project has analyzed the life cycle costs and economic viability of seven use cases of electric vehicle (EV) charging infrastructure, along with potential revenue models and pricing strategies. The study highlighted both opportunities and challenges in implementing different charging solutions, emphasizing cost structures, revenue generation, and financial sustainability. A key challenge in cost assessment is the overestimation of new product costs due to R&D expenses, lack of automation in manufacturing and installation, and the absence of economies of scale. Future cost reductions are difficult to predict but can be incorporated into economic models for more accurate projections. External variables such as copper prices, inflation, and maintenance costs introduce additional uncertainties. A uniform lifespan of 15 years and a weighted average cost of capital (WACC) of 6.5% were assumed, although higher WACC values should be used for technologies with lower technology readiness levels (TRLs), such as wireless charging systems. Public chargers typically exhibit low occupancy due to their higher costs compared to home and office charging, making their business model unsustainable for private investors unless installation costs are minimized and usage rates optimized. Revenue models for EV charging infrastructure are primarily based on charging fees, with three main approaches: time-Based Models which are suitable for urban low-power chargers where drivers pay for parking time; energy-based Models, common for high-power chargers in service areas, ensuring more uniform pricing based on energy delivered; alternative Models, like subscription-based or mixed models combining direct revenue from charging and indirect sources such as advertising or additional commercial services at charging hubs. Pricing strategies include cost-based, value-based, competitive, and dynamic pricing, each influencing user

adoption and financial viability. Financial models assess future revenues, expenses, and cash flows using tools like Discounted Cash Flow (DCF) analysis to determine project value. Smart charging, vehicle-to-grid (V2G), and dynamic grid balancing play essential roles in optimizing energy use, reducing costs, and stabilizing the grid but require significant upfront investments.

A. USE CASE INSIGHTS

Considering the conductive charging use cases for Urban Public Charging, specifically UC6, increasing the number of chargers does not necessarily boost utilization. Public chargers should align with local vehicle densities and mobility patterns. In Zaragoza, centralized scooter charging requires security measures against vandalism to ensure business viability. Another insight is that low-power DC bidirectional charging shows potential profitability for professional users (taxis, delivery vehicles) if strategically located in commercial areas, parking lots, and hotels. The scooter segment, on the other hand, may only be viable in high-tourism areas with frequent turnover. The Turin model, a charging hub in the city outskirts placed at an intermodal exchange point, is promising, especially if linked to DC networks to lower costs [13]. This approach aligns with urban policies promoting pedestrianization and clean transportation. Highway ultrafast Charging profitability, such as in UC5, remains uncertain due to high installation costs and variable demand. Although essential for reducing range anxiety, their utilization peaks during holidays and weekends, leading to congestion at peak times and underuse during off-peak periods. Regarding the wireless charging use cases, Dynamic wireless charging (UC3 and UC2) is challenging due to short exposure times over coils, requiring long corridors (e.g., 25 km) and high power (90 kW) for effective charging. Urban installations face higher costs, regulatory hurdles, and safety concerns. User adoption remains uncertain due to range anxiety and reluctance to reduce battery size. The static inductive charging of UC7 is a promising model, as taxis remain stationary while charging, leading to lower infrastructure costs and improved energy transfer efficiency. Profitability depends on sufficient taxi adoption and reasonable pricing agreements. One of the main focuses of the INCIT-EV project were the financial and grid impacts of large scale EV adoption. Smart charging reduces electricity costs by optimizing charging times but necessitates initial investment in advanced hardware and software. V2G enables revenue generation by discharging power back to the grid, although battery degradation and higher investment costs remain concerns. Dynamic grid balancing helps lower energy costs and grid strain but requires substantial upfront funding. Grid operators benefit from reduced peak demand and operational costs through these technologies. However, V2G and dynamic grid balancing require expensive infrastructure upgrades. The financial models suggest that revenue potential is maximized when

BUSINESS MODELS INCITEV	UC2 500 m	Paris Cent. DWPT	UC3 25 km	Paris Pher. DWPT
	UC2. 1-E-Trench 30 kW, 500 m		UC3. 1 E-Corr r 90 kW power t., 25 km	
	2030	2035	2030	2035
PROFIT AND LOSSES				
1. TOTAL REVENUES	135.518 €	134.626 €	2.317.848 €	2.316.689 €
2. TOTAL EXPENSES	-78.688 €	-73.751 €	-691.933 €	-662.044 €
3. IBITDA	56.830 €	60.875 €	1.625.914 €	1.654.645 €
4. NET INCOMES	548 €	7.476 €	548.695 €	628.788 €
KPIS				
1. NET PRESENT VALUE	-449.566 €	-330.208 €	-1.678.245 €	-488.159 €
2. INTERNAL RATE OF RETURN	-1,42%	0,34%	4,89%	5,96%
3. WACC	6,50%	6,50%	6,50%	6,50%
4. LIFETIME	15	15	15	15

FIGURE 24. UC2 and UC3.

BUSINESS MODELS INCITEV	UC 4	Turin	Hub 150 kW
	UC4. 1 Charger 150 kW and 2 chargers 3.6 kW		
	2025	2030	2035
PROFIT AND LOSSES			
1. TOTAL REVENUES	167.521 €	159.311 €	151.503 €
2. TOTAL EXPENSES	-44.225 €	-41.121 €	-38.259 €
3. IBITDA	123.296 €	118.190 €	113.244 €
4. NET INCOMES	77.166 €	74.864 €	72.572 €
KPIS			
1. NET PRESENT VALUE	554.375 €	546.407 €	537.588 €
2. INTERNAL RATE OF RETURN	27,61%	23,18%	24,46%
3. WACC	6,50%	6,50%	6,50%
4. LIFETIME	15	15	15

FIGURE 25. UC4.

BUSINESS MODELS INCITEV	UC5	Tallinn	SF 200 kW
	UC5. 1 Charger 200 kW		
Years described in the Deliverable in detail	2025	2030	2035
PROFIT AND LOSSES			
1. TOTAL REVENUES	80.895 €	84.671 €	70.496 €
2. TOTAL EXPENSES	-32.535 €	-29.797 €	-25.993 €
3. IBITDA	48.360 €	54.875 €	44.503 €
4. NET INCOMES	21.430 €	31.918 €	25.464 €
KPIS			
1. NET PRESENT VALUE	55.427 €	131.927 €	76.935 €
2. INTERNAL RATE OF RETURN	9,32%	17,74%	14,80%
3. WACC	6,50%	6,50%	6,50%
4. LIFETIME	15	15	15

FIGURE 26. UC5.

chargers are installed in high-turnover areas, integrated with public transport nodes, and coupled with additional services. Software developers targeting grid optimization solutions must balance software-as-a-service costs against long-term infrastructure savings for grid operators.

Hereinafter, we deploy the summary tables of the economic results based on our assumptions, as presented in the INCIT-EV deliverable ''Proposal for pricing and revenue models in the 7 use cases'' that analyzes the economics of the different use cases and their performance through a 15-year lifespan as if they were a ready-to-market commercial solution.

IV. PILLAR III POLICY MAKING AND REGULATIONS: A KEY TO INNOVATION AND ADOPTION DYNAMICS

The transition to electric vehicles (EVs) is a cornerstone of global efforts to achieve sustainable mobility and reduce greenhouse gas emissions [14]. However, the pace of EV adoption varies significantly across cities and regions, shaped by local infrastructure, market readiness, and regulatory environments. Policymaking and regulations

BUSINESS MODELS	UC6	Zaragoza	25 kW
INCITEV	UC6. 1 Charger 25 kW for EV and two wheels		
Years described in the Deliverable in detail	2025	2030	2035
PROFIT AND LOSSES			
1. TOTAL REVENUES	37.447 €	35.612 €	33.867 €
2. TOTAL EXPENSES	-20.941 €	-21.219 €	-19.096 €
3. IBITDA	16.506 €	14.393 €	14.771 €
4. NET INCOMES	7.220 €	5.979 €	7.143 €
KPIS			
1. NET PRESENT VALUE	-32.595 €	1.250 €	-11.259 €
2. INTERNAL RATE OF RETURN	5,99%	6,65%	9,03%
3. WACC	6,50%	6,50%	6,50%
4. LIFETIME	15	15	15

FIGURE 27. UC6.

BUSINESS MODELS	UC7 Zaragoza	OWPT 50 kW
INCITEV	UC7. 1 Charger 50 kW 0WPT	
Years described in the Deliverable in detail	2030	2035
PROFIT AND LOSSES		
1. TOTAL REVENUES	32.672 €	32.624 €
2. TOTAL EXPENSES	-17.860 €	-16.329 €
3. IBITDA	14.812 €	16.295 €
4. NET INCOMES	6.337 €	8.314 €
KPIS		
1. NET PRESENT VALUE	43.276	73.915
2. INTERNAL RATE OF RETURN	12,25%	17,74%
3. WACC	6,50%	6,50%
4. LIFETIME	15	15

FIGURE 28. UC7.

play a critical role in addressing these disparities by fostering an environment conducive to EV adoption [15]. They set the framework for incentivizing the deployment of charging infrastructure, ensuring grid reliability, and promoting equitable access to sustainable mobility solutions. To design effective policies, it is essential to understand the current state of development of cities with respect to the readiness for electric vehicles. A data-driven approach allows policymakers to identify gaps, prioritize investments and track progress over time. In this context, benchmarking cities' performance using measurable indicators—Key Performance Indicators (KPIs)—provides a robust framework for evidence-based decision-making. By capturing diverse dimensions, such as infrastructure availability, environmental impact and user behavior, KPIs enable cities to evaluate their position within the broader EV ecosystem. The INCIT-EV project leverages this methodology to classify cities based on their EV characteristics, creating a clear picture of their development [16]. Through clustering cities into distinct groups, the project highlights not only the leaders but also the areas requiring focused intervention. This approach empowers policymakers to direct resources strategically and tailor initiatives to the specific needs of different urban contexts.

A. THE KPI-BASED METHODOLOGY

The KPI-based methodology proposed in the INCIT-EV project [16] evaluates cities using a set of the following measurable indicators grouped into the following seven vectors. Civil and Social indicators such as population density, GDP per capita, and public attitudes toward EVs. Transport vectors like data on road networks, public transport availability, and traffic flow management. EV Census data like EV penetration rates and market share relative to conventional vehicles. Data regarding EV charging infrastructure such as availability, distribution, and type of charging stations within the city. Charging service economics metrics related to electricity prices, charging costs, and operational efficiency. Smart charging and ICT systems integration of smart charging solutions and user-friendly ICT tools. Environmental impact metrics like greenhouse gas emission reductions and the share of renewable energy used in EV charging. By assessing cities across these vectors, the methodology provides a comprehensive evaluation of their performance and readiness for EV adoption. The reliability of this methodology depends heavily on robust and consistent data. The primary data sources used include public databases (Eurostat, national statistics agencies, and other government sources to ensure comparability across cities), local governments information from municipal mobility plans and energy usage reports, INCIT-EV project data gathered during the case studies demonstrations and industry reports from private sector stakeholders in EV infrastructure and market analysis. To ensure consistency, data normalization techniques are applied, scaling all values between 0 and 100. This enables meaningful comparisons between cities, even when datasets are derived from different sources or regions. Once KPI data is compiled and normalized, the K-Means clustering algorithm [17] and [18] is employed to classify cities into groups, or clusters, based on their shared characteristics. The analysis was performed using the Python Scikit-learn Machine Learning Library (version 1.0.2) using quadratic distance. This involves assigning cities to clusters based on proximity to predefined centroids, using metrics like Euclidean distance and also refining cluster definitions iteratively using methods such as the Elbow Method (to determine the optimal number of clusters) and the Silhouette Coefficient (to evaluate cluster quality and separation). The optimality regarding the number of clusters related to the Elbow Method formula

$$WCSS = \sum_{j=1}^{k} \sum_{x \in C_j} \|x - \mu_j\|^2$$

occurs at the diminishing returns point on the WCSS curve. This process results in the identification of reference cities, which serve as benchmarks for their respective clusters. The KPI-based methodology offers multiple benefits in terms of benchmarking, support to design policies and knowledge sharing potential. For the benchmarking aspect, cities can compare their EV readiness against peers, identifying strengths and areas for improvement. In terms of policy support, the policymakers can design tailored interventions, focusing on specific gaps revealed by the analysis, while grouping similar cities fosters collaboration and the exchange of best practices. This methodology is a scalable and

adaptable tool, providing actionable insights to support the transition toward sustainable urban mobility.

B. RESULTS AND INSIGHTS FROM CITY CLUSTERING

The application of the KPI-based methodology to classify cities in the INCIT-EV project resulted in the clustering of 80 European cities into five distinct groups, referred to as reference cities. These clusters, see Figure 29, reflect the diverse characteristics and readiness levels of urban areas for adopting electric vehicles (EVs) and expanding EV-related infrastructure. This section highlights the key results and insights derived from the clustering process.

1) CITY CLUSTERS AND REFERENCE CITIES

Using the K-Means algorithm, cities were grouped based on similarities across seven vectors, encompassing socio-economic factors, transport systems, EV adoption rates, and environmental considerations. Each cluster was represented by a reference city, which serves as a benchmark for other cities within the same group. Reference City 1 (Green in Figure 29 and Figure 30) includes mostly Eastern European and Greek cities. It is characterized by high scores in charging service economics due to lower electricity prices but score low in environmental impact (high carbon intensity of energy generation) and EV census (low EV penetration and infrastructure currently present). Reference City 2 (Orange in Figure 29 and Figure 30) includes several western and central European cities. Balanced performance across all vectors except slightly lower in civil and social and EV census values characterizes this reference city. Overall, it represents an average group of cities with no extreme characteristics but moderate readiness for EV adoption. Reference City 3 (Grey in Figure 29 and Figure 30) represents the cities with the highest EV penetration and with an advanced charging infrastructure in place. Netherlands' cities dominate this group due to their high EV adoption rates (14.4 Policies and subsidies of this reference city also contribute to this group's success. Reference City 4 (Yellow in Figure 29 and Figure 30) features cities with advanced charging infrastructure but low EV penetration. It includes Romanian cities like Bucharest, Constanta, Cluj, and Timisoara and reflects a disparity between public and private sector efforts to promote EV adoption and actual user uptake. Reference City 5 (Blue in Figure 29 and Figure 30) is similar to Reference City 1 but with better civil and social and EV census scores. Paris, as an outlier, is categorized separately from other French cities due to significantly higher Civil and Social and EV Census scores.

2) STRATEGIC POLICY IMPLICATIONS

The insights gained from clustering offer policymakers a roadmap for targeted interventions. Promoting balanced development should be one of the main goals for policymakers. They can use reference cities as benchmarks, focusing on replicable measures that address gaps in infrastructure, user behavior, and regulatory frameworks.

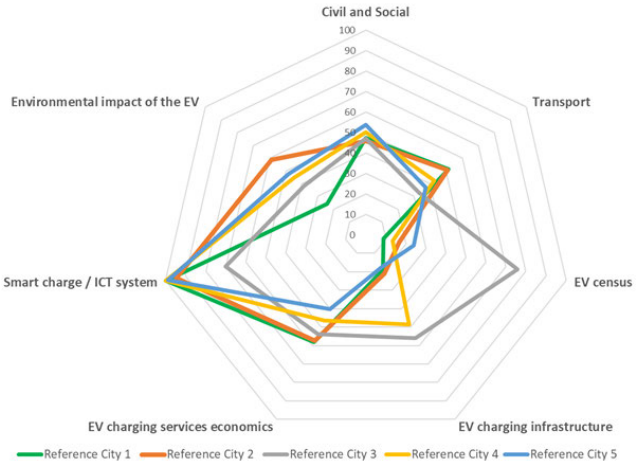

FIGURE 29. Spider graph showing the importance of evert KPIs-vector of the Reference cities or clusters.

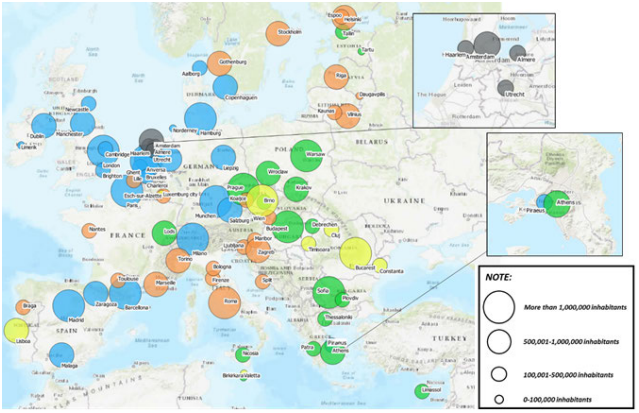

FIGURE 30. Location of the cities analised in the INCIT-EV Project.

Clusters create opportunities for knowledge-sharing and cooperative initiatives among cities with similar profiles, encouraging thus cooperation. The clustering approach provides a foundation for continuous assessment, allowing cities to track improvements in EV readiness over time and monitor their progress. By identifying strengths and weaknesses within clusters, this methodology enables decision-makers to allocate resources effectively and design strategies that are both practical and impactful. These insights, derived from robust data analysis, reinforce the critical role of evidence-based planning in driving the EV transition across Europe. The paper highlights the significance of the KPI-based methodology as a robust tool for fostering evidence-based policy-making in the transition to electric mobility. By evaluating cities across seven key dimensions—ranging from infrastructure readiness to environmental impact—the methodology enables the classification of urban areas into distinct clusters, revealing disparities and opportunities for EV adoption. This approach not only provides policymakers with actionable insights to design tailored strategies for infrastructure development and user incentives but also establishes benchmarks for

collaboration and progress monitoring. The KPI-based framework serves as a scalable and adaptable solution, ensuring targeted interventions that accelerate EV adoption while addressing the unique needs of diverse urban contexts.

C. REGULATIONS, BOTTLENECKS, SUGGESTIONS FOR IMPROVEMENTS AT EU LEVEL

Throughout the experience of the project development, especially during the implementation of the use cases experimental activities, evidence was gathered regarding the need for changes to standardization and regulatory frameworks to foster the wide-scale adoption of electric mobility. The recommendations proposed are aimed at addressing two main types of standardization needs. It is important to identify the areas where the absence of regulations is hindering innovation, or, whenever standards are present, provide a review and extension of those to improve the legislative framework. The methodology for tackling the regulation issue in the most comprehensive way followed consequential steps. First, it focused on the identification of the technology developments, in this instance advancements relevant to EV charging, better if directly involved in the project. After this first step, the Work was distributed among partners based on their project roles, expertise and participation in project demonstrators. This ensured that each aspect of the task was handled by the most knowledgeable and experienced partners, leveraging their specific competencies. An iterative process ensued to analyse existing standards, legislations and related documents. This process involved multiple cycles of review and refinement to ensure thorough analysis and identification of key issues. Partners conducted detailed assessments of current standards and regulations, focusing on their applicability, limitations and potential areas for improvement. Through the analysis, limits and gaps in the current regulatory and standardization framework were identified. This step was critical in pinpointing the specific areas where existing standards were insufficient or where no standards existed. Key issues such as interoperability, efficiency, safety and security were highlighted, forming the basis for proposing necessary changes. Based on the identified gaps and limitations, proposals for improvements or new legislation were developed. These proposals aimed to address the shortcomings of the current framework and support the effective and widespread adoption of EV charging infrastructure. Recommendations included updates to existing standards, the development of new standards, and the harmonization of regulations across different jurisdictions to ensure a cohesive and supportive environment for EV deployment. As hinted above, the use cases development phase was the most impacted by the present regulations or the lack thereof. The main working topics taken into exam have been the Wireless charging and vehicle modifications, the Bidirectional and smart charging and the native DC connection;

1) WIRELESS CHARGING AND VEHICLE MODIFICATIONS

Wireless charging for electric vehicles (EVs) is an emerging technology that aims to simplify the process of charging EVs by eliminating the need for cables and plugs. Its main principle is the magnetic induction. The charging station counts with the primary coil/s, which generates an alternating magnetic field when an alternating current (AC) flow thought it/them. When the secondary coil, attached to the underside of the vehicle, is placed on or over the primary coil or track, the magnetic field induces an electric current in the EV's coil, which is then converted into direct current (DC) to charge the battery. Wireless charging enables a seamless and user-friendly experience, and facilitates automated charging, which is particularly beneficial for autonomous vehicles (AV) and Connected Autonomous Vehicle (CAV) that can park themselves and initiate charging without human intervention. [In annex A you can find the current regulations regarding wireless charging and the other technologies/systems listed above]. Further developments are needed in order to reduce cost and increase efficiency, but a great role in the future adoption of this technology will be played by overcoming the current limitations of the regulations. For instance, ICNIRP recommendations are taken as a standard, but limits change in ICNIRP 1998 or ICNIRP 2010. As an example, the French standard remains that of 1998; 2010 version must be evaluated, and the standards will be updated in consequence. Furthermore, EM emissions testing procedures are undefined not only for the maximum levels, but also for tested positions. Aspects regarding the polarity of the magnetic field (shape of the coils), frequency range, operational mode and others need to be studied and discussed as well, just like the efficiency measurements methodology. There is a general lack of standards for communication between charging station and EVs for dynamic WPT use case applications. While ISO 15118 recommends the use of Wi-Fi and messages for the static WPT use case, it is not an adequate solution for the dynamic WPT due to several limitations. One significant issue is that communication between the vehicle and track will be lost at various points along the track. Aspects like the manipulation of the devices inside the EV and the supervision of the track (presence of strange objects, EM emissions) is not defined, and constitutes a severe security problem. Last but not least, the lack of standard for static WPT systems above 11.1 kW, as IEC 61980-3 classifies the IPT systems according to the input power classes originally defined by SAE J2954, which considers systems up to 11.1kW, and defines MF-WPT4 and 5 classes to be described in further editions.

Proposed solutions:

2) BIDIRECTIONAL AND SMART CHARGING

Bidirectional charging is a feature that allows EVs not only to get energy from the grid but also to give it back (also called V2G, Vehicle to Grid). It offers numerous advantages for both EV owners and electric grid system; in fact, the

TABLE 4. Proposed solution.

Type	Regulation/standards involved	Proposed solution
Update	ICNIRP	Evaluate the transition from ICNIRP 1998 to ICNIRP 2021 in the national implementation standards. Establish a clear timeline and process for adopting ICNIRP 2010 recommendations, including stakeholder consultation and regulatory updates

TABLE 5. Lack of definitions and standards in EM emissions and WPT technology.

Lack	**Definition of EM emissions testing procedure, limits and measurement positions.**
Lack	**Definition of efficiency measurement method.** VEDECOM proposes a method based on the energy sent or received by the EV per coil installed on the EV side and per kilometre in the case of DWPT charging.
Lack	**ISO 15118** Development of a specific communication standard for dynamic WPT, focusing on reliable and continuous data exchange between the vehicle and the charging infrastructure. This standard could leverage advanced wireless communication technologies like 5G, which offers low latency and high reliability, to ensure uninterrupted communication.
Lack	**Definition of security requirements for dynamic WPT, including aspects like the manipulation of the devices inside the EV and the supervision of the track (presence of strange objects, EM emissions).**
Lack	**IEC 61980** Definition of power classes above 11.1 kW. IEC 61980-3 defines MF-WPT4 and 5 classes to be described in further editions.

first ones can use energy stored in EV to power up a facility or give it back to the grid when the energy price is higher, in order to obtain energetic and economic gains. There are limitations caused by lack of regulation and standards improvements are needed to ease the adoption of bidirectional and smart charging EVs. For instance, it was not clear how to manage errors in "SupportedAppProtocol" phase, i.e. if EVCC doesn't offer "-20DC" namespace. (ISO 15118-20 [V2G20-2132]). Neither was clear how to manage errors in Authorization phase, i.e. if the "SelectedAuthorizationService" is not EIM. (ISO 15118-20 [V2G20-1583], [V2G20-2209], [V2G20-2219]). The same lack of clarity was encountered in how to handle errors in the

$$'DC_{C}hargeParameterDiscovery'$$

phase, that is, if invalid parameters are exchanged or if

$$'BPT_{D}C_{C}PDReqEnergyTranferMode'$$

is not used. (ISO 15118-20 [V2G20-2272]);

Lastly, it was not clear how to handle errors in the

$$'ScheduleExchange'$$

phase, that is, if

$$'EVMinimumEnergyRequest'$$

TABLE 6. Table of regulations and proposed solutions.

Type	Regulation/standards involved	Proposed solution
Update	Grid code	Grid code harmonization (now they are different in each country)
Update	ISO 15118-20	Conformance test implementation to guarantee interoperability
Update	ISO 15118-20	AC charging extension

TABLE 7. Regulation standards and proposed solutions.

Type	Regulation/standards involved	Proposed solution
Update	CEI 0-16; CEI 0-21	Request to ARERA (Italian energy market authority) for exemption from the usual AC distribution standards and regulations (in Italy: TIVOE, TIME, TIOE etc.) as the connection is DC-DC. Request to the Italian customs agency (ADM) of formal authorization to operate both the DC connection and the DC meter as mean to balance the expenses sustained between main POD and INCIT-EV DC POD with added excise duties (as the energy is used for EV recharging and not public transportation tramway traction).
Update	IEC 62053-41	Necessary to improve the regulation with more precise directives regarding DC metering.

is greater than

$$'EVMaximumEnergyRequest'$$

or

$$'EVTargetEnergyRequest'$$

(ISO 15118-20 / 8.3.4.3.7).

The proposed solutions are the following:

3) DC NATIVE CONNECTIONS

Only few regulations at EU level are dedicated to DC transmission and distribution. In electric energy distribution field, more specifically, the current reference document is the Commission Regulation (EU) 2016/1447 of 26 August 2016, that defines a general guideline and some regulatory principles regarding the standardization and the requirements for HVDC systems and connected DC generation parks among all EU member states. Other guidelines are emerging recently due to the activities of the Strategic Energy Technology (SET) Plan that gathers many different regulatory bodies from EU states in 14 working groups, with renewable energy sources, HVDC, smart DC microgrids, electrification of vehicles and batteries technology and supply chain among others related to DC grid regulation. At Italian level,

for example, the CEI (Italian Electrotechnical Committee) rules regarding Low and Medium voltage connections in distribution matters (CEI 0-21; CEI 0-16) do not specifically contemplate native DC connections with POD dignity, only focusing on AC distribution. Thus, for the objective of UC-4 in Torino Caio Mario Park, it was deemed necessary to start an interaction with the authorities. Moreover, the UC-4 demo site architecture involves tramway traction (this applies also to railways in general), and the excise duty regime is different for the public transport sector compared to any other distribution, with lower taxes as the energy is deployed for a public service purpose.

The proposed solutions are presented in Table 7.

V. CONCLUSION

The INCIT-EV project experience has been summarized in detail in the previous sections, pointing out what is the legacy of the project and what could be the core recommendations for public bodies, businesses and research centers, going forward in fostering the EV adoption across EU countries. The first conclusion that we can draw is that the user-centric approach is the right path moving forward. Technology pushes have sustained the first wave of innovators and early adopters that have consolidated the electric vehicle market in the past, especially in countries with more purchasing power and environmental awareness. In order to go over the hump (BloombergNEF analysts cut their outlook in 2024 for sales of EVs through 2026 by 13% [19], the solution could be to focus on user needs, innovations impact, perception and support infrastructure, assessed thanks to the KPI strategy. The paper highlighted the significance of the KPI-based methodology as a robust tool for fostering evidence-based policy-making in the transition to electric mobility. By evaluating cities across seven key dimensions—ranging from infrastructure readiness to environmental impact—the methodology enables the classification of urban areas into distinct clusters, revealing disparities and opportunities for EV adoption. This approach not only provides policymakers with actionable insights to design tailored strategies for infrastructure development and user incentives but also establishes benchmarks for collaboration and progress monitoring. The KPI-based framework serves as a scalable and adaptable solution, ensuring targeted interventions that accelerate EV adoption while addressing the unique needs of diverse urban contexts. The current economic landscape and the perceived shift of the attention of the USA, one of the main markets and drivers of the EV innovation and adoption, towards more traditional and hybrid propulsion systems going forward urges even more to keep an eye on the economics of the proposed innovation and the linked business models dedicated to the users. The INCIT-EV project provided a comprehensive evaluation of the economic feasibility of various EV charging models. Profitability depends largely on occupancy rates, upfront investment, and operational efficiency. Conductive charging solutions in well-planned hubs and strategic locations present viable business cases, whereas wireless charging still faces economic and technical challenges. The adoption of these technologies requires a careful balance between cost structures, revenue models, and market conditions to ensure long-term financial sustainability. Future improvements in technology, economies of scale, and regulatory support will be key to the success of these charging solutions. In terms of regulatory support, the paper highlighted the necessary improvements to be carried out at the EU and local level to provide the necessary conditions for streamlined product development and positive system integration between new technology applications and their related business models. There are still gaps in a relatively new sector with high innovation penetration and infrastructure development needs, so cooperation from public authorities coupled with great awareness from the research centers and technology developers is a must and was one of the main conclusions drawn by the project. From the strict technological perspective, the hardware applications designed, engineered and demonstrated in the use cases validated a comprehensive ecosystem of EV charging technologies, demonstrating that the solutions developed within the INCIT-EV project exceed the current commercial State-of-the-Art (SotA). Regarding conductive and bidirectional performance, the implementation of SiC-based power electronics represents a significant advancement for high-power density systems [20]. Specifically, the ultra-fast charging solution (UC5) recorded an efficiency of 95.63% at 80% load, which is superior to the current industrial average for 150 kW systems that typically oscillates between 94% and 95%. Similarly, the 25-kW bidirectional V2G unit (UC6) achieved a peak charging efficiency of 96.94%, outperforming market-available DC wallboxes that generally target a 95.5%–96% range. Furthermore, the verified 88.94% round-trip efficiency (AC-to-Battery-to-AC) confirms that bidirectional services are now energetically viable, effectively minimizing the efficiency penalty traditionally associated with V2G applications. In the field of Wireless Power Transfer (WPT), which remains technically challenging due to misalignment and environmental losses, the INCIT-EV results bridge the gap toward full commercialization [21]. The stationary IPT system (UC7) achieved an efficiency of 82.8%–85% at 50 kW, placing it in direct competition with high-end prototypes from leading industrial players while demonstrating superior robustness, maintaining an efficiency greater than 78% even at a ± 10 cm misalignment. For dynamic applications, the 90.6% efficiency achieved in Paris (UC2) represents a benchmark result for dynamic induction, comparing favorably with recent large-scale experiments where real-world transfer often struggles to maintain 85%. While high-speed tests at 90 km/h (UC3) saw a performance drop to 70%–80%, these findings provide a realistic quantitative baseline for the losses inherent in elongated coil geometries, which are essential for cost-effective motorway installations. The INCIT-EV project established a new differentiator in grid interaction and operational

resilience through the integration of ancillary services. The demonstrated 5-second response time for mFRR activation in UC5 is significantly faster than the requirements of most European TSOs, which often allow minutes for manual reserves, thereby positioning these chargers as primary assets for sub-minute grid frequency regulation [22]. This operational agility is supported by a technological frontier defined by the use of SiC MOSFETs operating at 80 kHz (UC4) [23]. This high-frequency approach allowed for a drastic reduction in passive component size while achieving efficiencies exceeding 98% in low-power DAB modules, setting a new bar for residential and shared smart-charging hubs. Collectively, these results prove that the INCIT-EV infrastructure is prepared for large-scale deployment, offering a high-efficiency, grid-responsive, and interoperable solution for the future of electromobility. To summarize, INCIT-EV has successfully moved the TRL of multi-modal charging from laboratory prototypes to integrated urban and peri-urban infrastructures. While challenges regarding the standardization of CCS-V2G and the optimization of high-speed dynamic coil losses are still present, the project provides a quantitative proof-of-concept that high-efficiency, grid-responsive, and interoperable charging is achievable with current semiconductor and control technologies and their integration in adequate business models requires planning in synergy with public bodies and institutions.

APPENDIX
TECHNOLOGY STANDARDS LIST
A. WIRELESS CHARGING STANDARDS

- SAE J2954: Wireless Power Transfer for Light-Duty Plug-in/Electric Vehicles and Alignment Methodology. Published in 20/10/20 as a standard V.11 published in 29/8/22.
- SAE J2954/2: Wireless Power Transfer of Heavy-Duty Plug-In Electric Vehicles and Positioning Communication J2954/2-202212 published.
- SAE J2954/3: Dynamic Wireless Power Transfer / Wireless Electric Road Systems for Light and Heavy-Duty Electric Vehicles. Acceptable criteria for D-WPT VA/GA specification: power class, efficiency, interoperability, electromagnetic compatibility, EMC/EMF, minimum performance, safety, and testing for WPT.

Alignment and Activation Methodology, Guidance Systems.

EMC/ EMF Differences between Static and Dynamic.

SAE J2954/1 and SAE J2954/2 Static WPT.

Electrical and communications system definition of ERS layers.

- SAE J2836/6 - Use Cases for Wireless Charging Communication for Plug-in Electric Vehicles.
- SAE J2847/6 – Communication for Wireless Power Transfer Between Light-Duty Plug-in Electric Vehicles and Wireless EV Charging Stations.
- UL 2750: Outline of Investigation for Wireless Power Transfer Equipment for Electric Vehicles.
- IEC 61980-1: Electric Vehicle Wireless Power Transfer (WPT) Systems - General requirements.
- IEC 61980-2: Electric Vehicle Wireless Power Transfer (WPT) Systems – Specific requirements for communication between electric road vehicle (EV) and infrastructure with respect to wireless power transfer (WPT) systems.
- IEC 61980-3: Electric Vehicle Wireless Power Transfer (WPT) Systems - Specific requirements for the magnetic field wireless power transfer systems.
- IEC 61980-4: Interoperability and safety of high-power wireless power transfer (H-WPT) for electric vehicles.
- IEC 63243: Interoperability and safety of dynamic wireless power transfer for EVs draft of the IEC 61980-5 renamed as IEC 63243
- IEC 63381 (IEC 61980-6): Communication requirements of D-WPT for electric vehicles.
- ISO 5474-4: Electrically propelled road vehicles — Functional requirements and safety requirements for power transfer — Part 4: Magnetic field wireless power transfer — Safety and interoperability requirements.
- ISO 19363: Electrically propelled vehicles — Magnetic field wireless power transfer - Safety and interoperability requirements
- ISO 15118-20: Road vehicles - Vehicle to grid communication interface - 2nd generation network layer and application layer requirements.
- ISO 15118-24: Conformance tests for WPT use cases of ISO 15118-20.

B. BIDIRECTIONAL, SMART CHARGING, GRID INTEGRATION AND DC NATIVE STANDARDS

- ISO 15118-20 International standard defining a vehicle to grid (V2G) communication interface for bi-directional charging and discharging of EVs.
- IEC 60870-5-104 Communication protocol used by Enedis for communications with the control system.
- IEC 61850 Definition of communication protocols associated with control equipment in Smart Grids.
- IEC 61851 Electrical safety standard for AC (-1) and DC (-23 and -24) electric vehicle charging equipment (mainly charging stations), with -21-1 and 2 covering EMC for charging stations, and -23-3 for the Megawatt Charging System (MCS for charging electric trucks).
- IEC 15118 Communication protocol between the Electric Vehicle and the charging station.
- IEC 63110 (or OCPP) Communication protocol between the charging station and the CPO system.
- IEC 62786-1, −2 and −3 To connect bi directionnal EVs capable of re-injection (conditions for connecting decentralized energies (DER): batteries and solar), such as RfG. A version for electric vehicles is planned.
- IEC 63119 To assure roaming of Evs including contract for energy supply.

- IEC 63380 Deals with EMS including Eebus links to the charger.
- IEC 63382 (or OpenADR) Describes data exchange between flexibility actors and CPOs.
- Commission Regulation (EU) 2016/1447.

ACKNOWLEDGMENT

The authors would like to express their gratitude to Miguel Zarzuela, the project's manager, as well as all the partners involved in the project.

They acknowledge the use of generative AI tools, specifically Google Gemini, for the linguistic optimization, structural drafting, and stylistic refinement of the conclusion section and the comparative analysis with the state-of-the-art. They remain fully responsible for the technical accuracy of the data, the validity of the experimental results, and the selection of the cited literature.

REFERENCES

[1] A. M. Munoz, J. Ballestin-Fuertes, G. Fernandez, D. Marquina, and R. Igea, "Four-leg EV chargers for grid supporting," in *Proc. PCIM Eur. Int. Exhib. Conf. Power Electron., Intell. Motion, Renew. Energy Energy Manage.*, May 2022, pp. 1–7.

[2] S. Aghajan-Eshkevari, S. Azad, M. Nazari-Heris, M. T. Ameli, and S. Asadi, "Charging and discharging of electric vehicles in power systems: An updated and detailed review of methods, control structures, objectives, and optimization methodologies," *Sustainability*, vol. 14, no. 4, p. 2137, 2022.

[3] I. Torres-Alfonso and C. Costas-Sos, "Implementation and preliminary static tests of a dynamic wireless charger for interurban roads," *IEEE Trans. Ind. Electron.*, vol. 59, no. 2, pp. 945–951, Feb. 2012.

[4] I. M. Torres-Alfonso, C. Costas-Sos, J. M. Perie-Buil, J. F. Sanz-Osorio, J. L. Villa, and O. Garcia-Izquierdo, "Dynamic wireless charging system design for extra-urban areas based on resonant inductive power transfer," in *Proc. PCIM Eur. Int. Exhib. Conf. Power Electron., Intell. Motion, Renew. Energy Energy Manag.*, 2024, pp. 2498–2507.

[5] C. Costas-Sos, I. M. Torres-Alfonso, J. M. Perie-Buil, and A. M. Munoz-Gomez, "Implementation and verification of a 50kw opportunity wireless charger design," in *Proc. PCIM Eur. Int. Exhib. Conf. Power Electron., Intell. Motion, Renew. Energy Energy Manag.*, 2024, pp. 205–213.

[6] Z. M. Gomes, H. Moussa, Y. L. Gall, E. O. Prado, G. Damm, J. R. Pinheiro, and C. Ripoll, "A nonlinear state-space model and control algorithm for a dynamic wireless power transfer system electric vehicle charger application," *Control Eng. Pract.*, vol. 158, May 2025, Art. no. 106270.

[7] Z. Meira Gomes, E. D. O. Prado, Y. Le Gall, G. Damm, C. Ripoll, and J. R. Pinheiro, "Design, model, and control of a dynamic wireless power transfer system for a 30-kW electric vehicle charger application," *IEEE J. Emerg. Sel. Topics Power Electron.*, vol. 13, no. 3, pp. 3882–3894, Jun. 2025.

[8] A. A. S. Mohamed, A. A. Shaier, H. Metwally, and S. I. Selem, "An overview of dynamic inductive charging for electric vehicles," *Energies*, vol. 15, no. 15, p. 5613, Aug. 2022.

[9] G. Palani, U. Sengamalai, P. Vishnuram, and B. Nastasi, "Challenges and barriers of wireless charging technologies for electric vehicles," *IET Power Electron.*, vol. 12, no. 12, pp. 3005–3020, 2019.

[10] X. Mou, D. T. Gladwin, R. Zhao, and H. Suni, "Survey on magnetic resonant coupling wireless power transfer technology for electric vehicle charging," *Energies*, vol. 15, no. 15, 2022.

[11] J. L. Villa, J. Sallan, J. F. S. Osorio, and A. Llombart, "High-misalignment tolerant compensation topology for icpt systems," in *Proc. IEEE Wireless Power Technol. Conf. Expo (WPTCE)*, 2025.

[12] Y. Yao, X. Chen, J. Li, H. Hu, D. Vizzari, and Y. Peng, "Towards sustainable and efficient inductive charging pavement systems: Current progress and future directions," *Construction Building Mater.*, vol. 449, Oct. 2024, Art. no. 138532.

[13] M. Prussi, A. F. Cota, L. Laveneziana, G. Chiantera, and P. Guglielmi, "Electric vehicle charging from tramway infrastructure: A new concept and the Turin case study," *Energies*, vol. 17, no. 5, p. 984, Feb. 2024.

[14] H. Breetz, M. Mildenberger, and L. Stokes, "The political logics of clean energy transitions," *Bus. Politics*, vol. 20, no. 4, pp. 492–522, Dec. 2018.

[15] S. Hardman, S. Shiu, and R. Steinberger-Wilckens, "Comparing high and low electric vehicle adopters in Europe: Impact of policies and infrastructure," *Transp. Res. A, Policy Pract.*, no. 88, pp. 247–262, 2016.

[16] A. Menendez Agudin, C. Caballini, F. P. Deflorio, G. Fernandez Aznar, L. Herman, and K. Knez, "Towards sustainable cities: A KPI-based method to compare cities' performance and encourage the spread of electric cars," *Sustainability*, vol. 17, no. 7, p. 3052, Mar. 2025.

[17] F. Vance, "Clustering and the continuous k-means algorithm," *Los Alamos Sci.*, vol. 22, p. 67, Jan. 1994.

[18] B. Wu, "K-means clustering algorithm and Python implementation," in *Proc. IEEE Int. Conf. Comput. Sci., Artif. Intell. Electron. Eng. (CSAIEE)*, Aug. 2021, pp. 55–59.

[19] (2024). [Online]. Available: https://www.bloomberg.com/news/articles/2024-06-12/electric-vehicle-sales-slow-tesla-s-aging-lineup-among-contributing-factors

[20] M. S. Bhaskar, P. Sanjeevikumar, N. Holm-Nielsen, and F. Blaabjerg, "Comparative analysis of SiC-based isolated bidirectional DC/DC converters for modularized EV charging," *IEEE Trans. Power Electron.*, vol. 40, no. 2, pp. 1120–1135, Feb. 2025.

[21] M. Guerrieri and F. Autelitano, *Electric Road Systems E 'Dynamic Wireless Power Transfer System'. Il Caso Studio Dell'Arena Del Futuro*. Cham, Switzerland: Springer, 2025, pp. 185–234.

[22] *Manual Frequency Restoration Reserve (MFRR) Implementation Framework and MARI Project Status*, European Network of Transmission System Operators for Electricity, 2024.

[23] A. Huang, "Gallium nitride and silicon carbide power devices for next-generation charging infrastructure," *IEEE Power Electron. Mag.*, vol. 11, no. 1, pp. 18–29, 2024.

ALFREDO FELIX COTA received the master's degree from the University of Torino, in 2019. He is currently a Ph.D. Researcher in the electrical, electronics and communication doctoral course with the Politecnico di Torino, focusing his research on future perspectives for integrated DC networks and electric vehicles. Previously, he was a Research Fellow with the Energy Department, Politecnico di Torino, from 2020 to 2022. He is an expert in European-funded projects, DC distribution, tramway grids, and EV charging technologies. He has participated or is participating in many European-funded projects, such as: ASSURED, INCIT-EV, PRELUDE, Datacellar, POSEIDON, EU-DREAM, TIPS4PED, BRIDES, VERSAPRINT, and CIRCUBATT.

GUIDO PERBOLI is currently a Full Professor of the Decision Making and Artificial Intelligence and Operations Research, Politecnico di Torino, and an Associate Member of CIRRELT, Québec, Canada. Mentor of Startups and with 15 years of experience in business development and research and development, he is currently a Shareholder and a CSO of Arisk S.p.A., a Deeptech company operating with the Enterprise Crisis sector and Spinoff of Politecnico di Torino. In 2016, he founded the ICT for City Logistics and Enterprises (ICE) Center of Politecnico di Torino, a research center focused on two main activities supporting Urban growth: logistics and enterprises. He is the author of more than 100 papers in peer-reviewed international journals and conferences and a member or coordinator of international and national research projects. He is also a member of scientific boards and awards, including the Scientific Board of SOS Log, the main Italian association of Sustainable Logistics. Since 2022, he has become part of the "World's Top 2% Scientists" ranking developed by Stanford University in collaboration with Scopus.

PAOLO GUGLIELMI (Member, IEEE) received the M.Sc. degree in electronic engineering and the Ph.D. degree in electrical engineering from the Politecnico di Torino, Turin, Italy, in 1996 and 2001, respectively. Since 2012, he has been an Associate Professor with the Department of Energy, Politecnico di Torino. In 2023, he reached the position of a full professor. His fields of interest are wireless power transfer, power electronics, high-performance servo drives, and computer-aided design of electrical machines, always in the field of electric traction. He is an Active Member of IAS, IES, and PES International Scientific Societies and has authored more than 140 papers published in technical journals and conference proceedings.

ANTONIO-MIGUEL MUÑOZ-GÓMEZ received the bachelor's degree in industrial electronics and automation engineering from the University of León, the bachelor's degree in systems computing from the University of Zaragoza, and the master's degree in research of industrial technologies from UNED. During his professional career, he has worked as a Project Manager in engineering and research projects and has extensive experience in the industrial sector as the Head of Electronics Department, participating in several European projects, such as AERIAL-CORE, INCIT-EV, NEUTRALPATH, and REEFLEX. Since 2019, he has been part of the power electronics team of the CIRCE Foundation and he leads the electric mobility team. He has authored several journal articles and participated in international conferences. He has registered intellectual property with two utility models dedicated to inductive energy harvesting and an EV charger design protection. In 2009, he was awarded for the Project Hydrogen-powered Kart. Formula Zero. In 2021, he received the award for Excellence in studies for the master's degree and Academic Year from 2019 to 2020.

GREGORIO FERNÁNDEZ AZNAR received the Industrial Engineer degree in electrical systems from the University of Zaragoza, in 2010, and the master's degree in renewable energies from the CIRCE Foundation, in 2011. He is currently pursuing the Ph.D. degree, related to grid integration of electric vehicle charging points. He has been with CIRCE Foundation, since 2010, he has developed his work as a Researcher and a Project Manager, both national and international ones, in projects in the fields of storage and renewable energies integration and Smart Grids, such as REEFLEX, PARITY, SYNERGY, EV-OPTIMANAGER, FLEXICIENCY, WAVE, FLEXCOOP, MIRED-CON, and in projects related to electric vehicles, such as INCIT-EV, SIRVE or CRAVE. Since 2012, he has been taught classes on the integration of RES and electric vehicles in several master's degrees and courses managed by CIRCE Foundation, EUREC or Zaragoza University. His research fields are integration, optimization and forecasting within the framework of smart grids, electric vehicles, renewable energies, and storage systems.

IRENE MARIA TORRES ALFONSO is a Technical Project Manager with CIRCE Technology Centre, where she currently leads the Research and Development line on wireless charging technologies. Over the past three years, she has led the design and deployment of two inductive charging systems within the framework of European INCIT-EV (Horizon 2020) Project. She trained in electronics engineering, Irene has consistently focused her professional career on research and development activities related to the design, implementation, and testing of power resonant converters, with applications ranging from electric mobility to wireless power transfer systems.



GILNEY DAMM (Member, IEEE) received the B.Sc. degree in automatic control from the Rio de Janeiro Federal University, Rio de Janeiro, Brazil, in 1995, and the Ph.D. degree from the Centrale Supelec, Paris-Saclay University, Gif-sur-Yvette, France, in 2001. He is currently a Senior Research Scientist (Directeur de Recherche) with the Laboratoire COSYS-IMSE, Gustave Eiffel University, Marne-la-Vallée, France. He was an Associate Professor with the CentraleSupélec, Paris-Saclay University, during 18 years. He is also an Electronic Engineer in automatic control with the Rio de Janeiro Federal University. His main applications are in the field of large-scale integration of renewable energy and electric vehicles; multiterminal high-voltage direct current (HVdc) systems; mixed ac/dc microgrids; control of power systems and power electronics in high and low voltages and ac and dc (transient stabilization, frequency, voltage stability, synthetic inertia, and grid forming converters); synchronization of power networks; energy integration in SmartCities; and dynamic recharging of electric vehicles (along the road). He has a large experience as a Coordinator or the Work-Package Leader in several European and French research projects, in particular, the Institutes for Energy Transition SuperGrid (on large-scale high voltage electrical grids), Villeurbane, France, Efficacity (on MicroGrids and SmartCities), Champs-sur-Marne, France, and VEDECOM (on dynamic inductive charging of electric vehicles), Satory, France. His research interests concern nonlinear and adaptive control and observers applied to power systems (smartgrids, supergrid, and microgrids). He has been a member of the IFAC Technical Committee TC 6.3 Power and Energy Systems, since 2015. He has been an Associate Editor of *European Journal of Control*, since 2010.

HUSSEIN AL-HAJ HASSAN received the Engineering degree in telecommunications and computer engineering from Lebanese University, the master's degree in telecommunication networks from Lebanese University and Saint Joseph University, Beirut, Lebanon, in 2011 and 2012, respectively, and the Ph.D. degree in networking from IMT Atlantique, Rennes, France, in 2015. In 2016, he joined the Faculty of Engineering, American University of Science and Technology. In 2021, he was a Research and Standardization Engineer with Acklio, where he contributed to the standardization of IoT protocols within the LoRa Alliance and DLMS User Association (DLMS UA). He currently leads the Charging Team with VEDECOM, where he focuses on the development and optimization of electric vehicle charging technologies. His research interests include wireless communications, energy efficiency, the Internet of Things (IoT), communication protocols, and electric vehicle charging systems. He was awarded the LoRa Alliance Team Award for his contribution.

JUAN DE BLAS POMBO received the M.B.A. degree and the master's degrees in energy business, renewable energy financing, hydrogen technology, and international. He is an Experienced Senior Advisor and an Industrial Engineer specialized in energy and organization. He have developed my career in the field of research, development and innovation, working initially with Gas Natural SDG, ACS Group (Dragados-Urbaner) and lately in different SMEs where he finally assumed the responsibility of the General Management; BESEL (Hydrogen and fuel cells company), ENERMAN (PV company), Qi EUROPE (EU Research grants) and Qi ARROW (Hydrogen sector). He was a Hydrogen Pioneer in Spain and a Founder of Spanish Fuel Cell Association (APPICE secretary), in 2001, he have combined technical positions (Director of Engineering and R&D) with trade and business development positions (Director of Operations and Business Development) and top-level management positions (General Manager and/or founder on four companies). He has large expertise in consulting, engineering, research and development and management activities. He has more than 27 years in sustainability and clean energy. He is currently an Advisor for top multinationals in the hydrogen, clean mobility, and REs sector (including big four). He have been a Secretary or a member of the Board in several national associations facing new technologies, such as AEDIE (public and private engineering companies' association), APPICE (hydrogen and fuel cells association, founder and secretary), AEH (Spain Hydrogen association, founder), and ENEBC (Spanish heat pumps association, secretary), and assigned member of European Clean Hydrogen Alliance. He is an Official Business Coach for EU and the Community of Madrid.

PEDRO SALAZAR received the degree in industrial electronics. He is an Industrial Engineer with a specialization in automation and robotics. He has worked for more than ten years in research, development and innovation projects. From 2008 to 2012, he was a Researcher and a Project Engineer in the field of ICT and a Data Analysis for two Technology Centers, the Institute of Biomechanics and AINIA (food industry), where he participated in national and European Research and Development projects. From 2012 to 2016, he was Program Manager with Abengoa, participating and leading several FP7 projects related to the smart integration of renewable energy sources. From 2016 to 2018, he was a Research and Development Director with Ingeteam Power Technology, involved in onshore and offshore wind innovation initiatives, as well as solar energy. Before working as a Consultant in new technologies, he was a Research and Development Manager with Elecgy Solutions, an innovative SME in the field of power electronics, beneficiary of an SME Instrument (H2020) Grant.