POLITECNICO DI TORINO
Repository ISTITUZIONALE

EMC Analysis and Trade-Off for Envision Subsurface Radar Sounder Accommodation

Original
EMC Analysis and Trade-Off for Envision Subsurface Radar Sounder Accommodation / Nicoletto, M., Boschetti, D., Junge, A., Ballaera, S.G.. - (2025), pp. 1-6. (2025 ESA Workshop on Aerospace EMC Seville (Spa) May 12-14 2025) [10.23919/AerospaceEMC64918.2025.11075204].

Availability:
This version is available at: 11583/3003453 since: 2025-10-07T13:36:15Z

Publisher:
IEEE

Published
DOI:10.23919/AerospaceEMC64918.2025.11075204

Terms of use:

This article is made available under terms and conditions as specified in the corresponding bibliographic description in the repository

Publisher copyright
IEEE postprint/Author's Accepted Manuscript

©2025 IEEE. Personal use of this material is permitted. Permission from IEEE must be obtained for all other uses, in any current or future media, including reprinting/republishing this material for advertising or promotional purposes, creating new collecting works, for resale or lists, or reuse of any copyrighted component of this work in other works.

(Article begins on next page)

26 November 2026

EMC Analysis and Trade-Off for Envision Subsurface Radar Sounder Accommodation

Marco Nicoletto
Domain Exploration and Science Italia
Space Environments
Thales Alenia Space Italia
Turin, Italy
marco.nicoletto@thales aleniaspace.com

Demis Boschetti
Domain Exploration and Science Italia
Space Environments
Thales Alenia Space Italia
Turin, Italy
demis.boschetti@thales aleniaspace.com

Axel Junge
Electromagnetic Compatibility and Harness Section
ESA, ESTEC
Noordwijk, The Netherlands
axel.junge@esa.int

Simone Gaetano Ballaera
dept. of Electronics and Telecommunications
Politecnico di Torino
Turin, Italy
simone.ballaera@polito.it

***Abstract*— The electromagnetic compatibility is a key topic on Envision spacecraft, mainly driven by the sensitivity of radars radio-frequency front-end electronics. In particular, the subsurface radar sounder works in a relatively low frequency rage (9 MHz central frequency) with an extremely wide band (5 MHz). This frequency range is typically polluted by spacecraft platform switching elements (e.g. converters) and signal clocks. On the other hand, due to the high power transmitted, it is crucial to design the spacecraft protecting the equipment from the high field strength generated during radars operations. Alongside electromagnetic compatibility, a primary challenge in designing a spacecraft equipped with radar sounders is to guarantee its radio-frequency performance. The accommodation and the decoupling between the dipole, used as radiating element, and the other appendages of the spacecraft is fundamental to ensure the requested gain and providing a smooth and monotonic impedance.**

Keywords—Envision, electromagnetic compatibility, radar sounder, dipole accommodation, antenna impedance, solar array, antenna gain, common mode, multi-point ground, modelling, electric field, susceptibility.

I. INTRODUCTION

Envision will be the first mission to investigate Venus from its inner core to its upper atmosphere, characterizing the interaction between its different envelopes: its atmosphere, surface/subsurface and interior [1]. It aims to provide a holistic view of Venus, studying the planet's history, activity and climate. The Envision system is composed by three segments: the space segment, the launch segment and the ground segment. The space segment, which design, development and verification is under Thales Alenia Space Italia responsibility, consists of a single satellite orbiting Venus which will carry 6 scientific instruments. One of them is the Subsurface Radar Sounder (SRS) [1], [2].

Radar sounders are widely used for celestial bodies geophysical exploration around the solar system. They are based on transmission of electromagnetic pulses ("chirp") in the range of mid/high frequency from an orbiting platform. The electromagnetic pulses, transmitted toward the surface and subsurface of the planet, are reflected, generating echoes that are detected and processed. As the satellite moves along its orbit (i.e. along-track direction), several measurements of the same target are acquired and combined using synthetic aperture data-processing techniques (Fig. 1).

The SRS instrument is based on heritage and lessons learned from radar sounders embarked on different space missions, mainly:

- Mars Express: Mars Advanced Radar for Subsurface and Ionosphere Sounding (MARSIS);
- Mars Reconnaissance Orbiter (MRO): SHAllow RADAR (SHARAD);
- Jupiter Icy Moons Explorer (JUICE): Radar for Icy Moons Exploration (RIME);

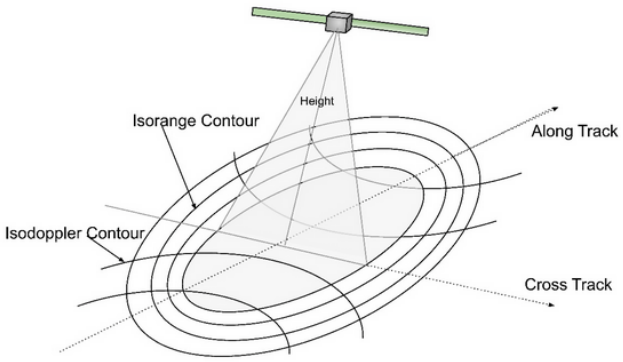

Fig. 1: Space based radar sounding acquisition geometry.

As a nadir-looking instrument, the accommodation of the radar sounder on the spacecraft is crucial for achieving the requested instrument performance. The antenna accommodation often poses significant challenges mainly driven by:

- Performance requirements: minimum antenna gain in the Field of View (FoV) and impedance;
- Operational constraints like need to have instruments simultaneous acquisitions;
- Spacecraft configuration constraints: stay out areas, FoV, envelope, appendages, etc.;
- Matching network (MN) position and configuration;

- Spacecraft electromagnetic compatibility (EMC): coupling towards other instruments and/or on-board antenna, electric field strength generated on platform equipment during radar observations, etc.

The paper aims to outline the approach and methodology used to establish a set of EMC requirements able to comply with the instrument needs. These requirements are essential to ensure the compatibility of the SRS with the spacecraft and its radio-frequency (RF) performance.

II. SRS Characteristics and Main Challenges

The radar sounder used in this mission is a monostatic high-frequency (HF) radar, transmitting linear frequency modulated (chirp) pulse with a maximum bandwidth of 5 MHz centered at 9 MHz. The SRS instrument is aimed to analyse the subsurface structure down to 1 km with vertical resolution of 20 m to investigate buried geological features and reveal the planet history. While SRS electronics are provided by Agenzia Spaziale Italiana (ASI) as a customer furnished item via European Space Agency (ESA), the radiating element, which is a 16 m tip-to-tip dipole antenna, is procured directly by the industry.

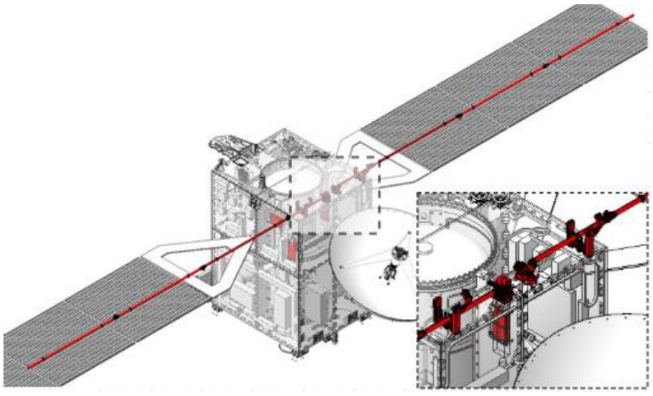

Fig. 2: SRS antenna accommodation (deployed configuration) on the nadir deck and matching network position inside the spacecraft.

The SRS instrument is highly sensitive to radiated interferences within its bandwidth due to the high performance requested. Specifically, the total interference integrated power in the SRS frequency range shall not exceed -82 dBm. The sensitivity threshold is extremely critical because it is the same as the radar sounder embarked on JUICE, which is experiencing in-flight anomalies due to electromagnetic interference coming from the interaction between power control and distribution unit (PCDU), solar array assembly and dipole antenna [5]. The coupling between the dipole and the solar array is expected to be even worse on Envision due to the parallel configuration of the two appendages and their similar electrical length. This accommodation is mainly imposed by the requirements for simultaneous operations of the instruments.

Furthermore, the radar sounder's transmission of 200 W (53 dBm) RF chirp pulses generates high field strengths around the spacecraft. To protect both the SRS receiver and spacecraft equipment, specific EMC requirements are necessary to limit maximum radiated emissions around 9 MHz and the spacecraft design shall be based on requirements aimed to increase its shielding effectiveness.

Alongside the receiver sensitivity and the high level of RF power transmitted, the requested RF performance are challenging because the deviation between far-field (FF) radiation pattern and the theoretical dipole (here called reference antenna) shall be less than 1 dB within a cone of ±30 degree around nadir. The specified performance shall be guaranteed in any spacecraft configuration, independently from the solar array position. A part for the requirements on the antenna gain, it is fundamental also to provide a smooth and monotonic impedance (as close as possible to the theoretical one) to allow the design of a wide-band matching network. To achieve this goal, the coaxial cables between the matching network and each boom of the dipole, shall be as short as possible limiting the intrinsic capacitance per length.

The RF analysis outlined in Section IV shows that cables longer than 300 mm introduce resonances in the antenna impedance increasing the matching network complexity. Based on that, the matching network has been accommodated on the a shear panel, 200 mm below the transition boxes, as shown in Fig. 2.

III. Modeling

A detailed 3D electromagnetic model of the spacecraft has been developed during the early phases of the project thanks to the ESA experience gained during JUICE mission [4]. During the entire design phase, the analytical model will be used to evaluate the SRS antenna assembly performance, including its interaction with various spacecraft elements, and to establish the system EMC requirements.

The model has been developed using CST® Studio Suite, offering the capability to use multiple solvers, including Cable Studio. By combining the time domain (TD) solver with Cable Studio, it is possible to deeply analyze the grounding architecture of the solar array, including the harness and bleed resistor wiring. Identification of proper design for the solar array is crucial, because a not optimized architecture could significantly reduce the instrument performance increasing also the coupling.

Regarding the dipole antenna, the model must be extremely detailed to include not only the antenna itself, but also elements that could change antenna impedance and gain. Specifically, since the beginning of the project, the SRS antenna model includes the two coaxial cables interconnecting the dipole with its matching network, as well as wires needed to connect the matching network to each boom.

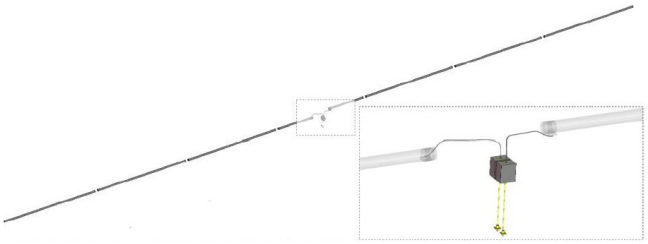

Fig. 3: SRS antenna assembly detailed RF model including titanium wires, transition boxes and coaxial cables.

Due to the severe thermal environment during aerobraking, each boom of the antenna cannot be directly connected to the instrument matching network using standard coaxial connectors and cables. To connect the dipole arms to the section of the MN, two transition boxes (TBs) are used. In details, each boom is connected to its TB using a 2 mm shaped titanium wire. Even if the shape of the two wires is slightly

different due to TB accommodation constraints, the length (370 mm) is the same maintaining the assembly symmetry. The matching network, for which the design is still not known, is simulated using an ideal balun.

The 3D electromagnetic model includes the two wings of the solar array, the high gain antenna (HGA), the simplified antenna of the VenSAR instrument (feed and reflectarray) and the spacecraft structure with its main openings. The model is used to perform different trade-offs and EMC analysis, encompassing:

- Antenna accommodation in relation to the orientation of the solar array and different wing configurations (linear vs. cross).
- Solar array configuration (linear vs. cross) and grounding architecture.
- Antenna assembly RF performance: antenna gain and impedance.
- Spacecraft electromagnetic compatibility with SRS.

Thanks to the detailed model, and to the parametric approach adopted, it has been possible to preliminary assess different solar array wing configurations (i.e. linear vs. cross) in terms of antenna pattern distortion and coupling with the antenna dipole. A schematic overview of the detailed solar array wing model (without bleed resistors) is shown in Fig. 4.

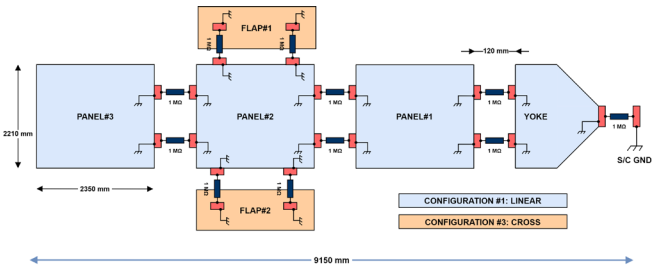

Fig. 4: Solar array wing model – different configurations with lumped elements.

IV. SRS Antenna Assembly Accommodation and RF Performance

Since the RF performance of the SRS antenna assembly is mainly affected by titanium wires and by coaxial cables, those elements are included in the model with a good level of details. The antenna is accommodated on the top deck, orthogonal to nadir and parallel to the spacecraft velocity vector during SRS observations, as per high-level requirement. The compliance to the Science Operations Reference Scenario results in a spacecraft configuration with the antenna dipole parallel to the solar array. Even if the baseline configuration maximizes the coupling between the SRS antenna and the spacecraft appendages, this is the unique accommodation in which the spacecraft is expected to be able to comply with the instrument observation plan and requirements.

The model of the antenna assembly, already characterized in free space, has been included in the system model. Each panel of the solar array is connected to the adjacent panel (and/or yoke) via a 10 kΩ lumped element to simulate the bleed resistor. The yoke is then electrically connected to spacecraft ground with a 10 kΩ resistor. However, as normal work, the model will be improved during the design phase, including two redundant 20 kΩ bleed resistors per panel, connected to spacecraft ground through AWG22 single wires. The RF performances are evaluated in terms of S-parameters, antenna impedance and gain. As expected, the downshift of the resonance frequency observed in free space (due to titanium wires length), is almost compensated by the capacitive coupling between the antenna and the spacecraft.

Concerning the antenna impedance, which is shown in Fig. 5, the real part remains smooth, monotonic (without resonances in the SRS bandwidth) with a slight reduction of the magnitude at 11.5 MHz. However, the imaginary part, as expected, is the most affected performance. The capacitance between the spacecraft and SRS antenna, is lowering the impedance starting from 8 MHz. The maximum impedance variation, compared to the SRS antenna in free space, is 180 Ω at 11.5 MHz. However, if the impedance is compared to the reference antenna, it is possible to note that the variation at both lowest and highest frequencies is limited to only 65 Ω. Being the imaginary part still smooth, monotonic and with a deviation limited to 65 Ω (with respect to the reference antenna), the provided impedance is promising.

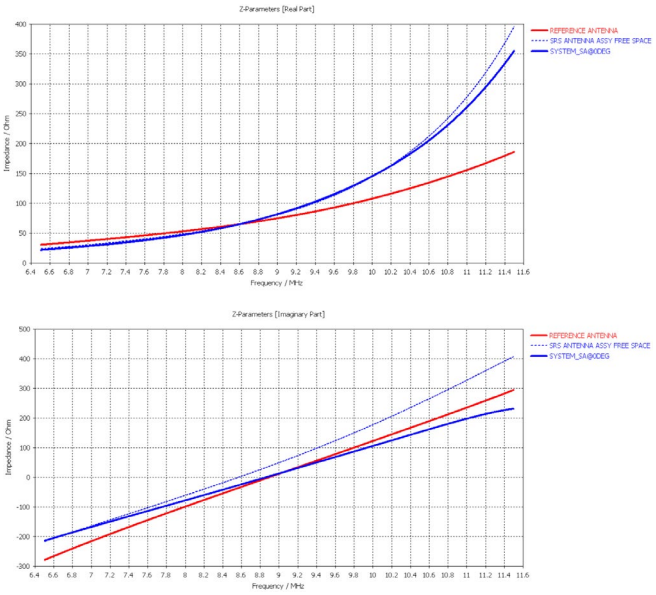

Fig. 5: SRS Antenna assembly on spacecraft – Impedance: real part (top) and imaginary part (bottom).

Concerning the antenna pattern, it shows a significant coupling between the SRS antenna and the spacecraft appendages. As discussed, this coupling is maximized due to the accommodation of the SRS antenna dipole, parallel to the appendages. The parallel configuration of SRS antenna, VenSAR reflectarray and solar array is working as an antenna array changing the main lobe direction and the nadir peak gain. The observed frequency behaviour, and moving of main lobe direction, is coherent with the electrical length of the spacecraft appendages.

Even if there is a significant variation in the antenna pattern, and the maximum gain direction outside the SRS field of view, the RF performance provided by the spacecraft is expected to be compliant with all applicable requirements.

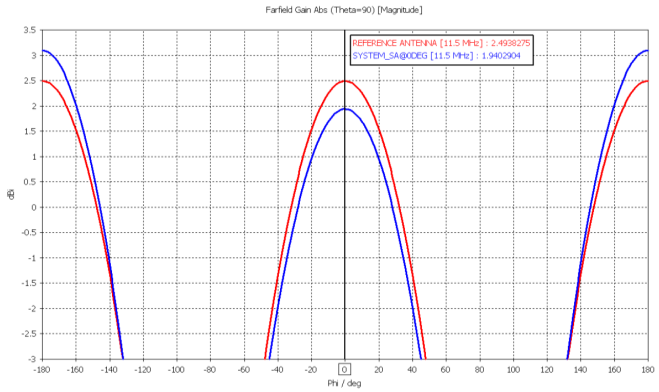

Fig. 6: Absolute gain at 11.5 MHz on th=90° plane (Nadir at Phi=0°) compared to the reference antenna (in red).

The main drawbacks, identified so far, of the proposed SRS accommodation are:

- Reduction of the available SNR due to gain reduction in nadir;
- EMI coupling increase due to maximum gain, over 3 dBi, in the backside;
- High coupling between solar array and SRS antenna dipole.

During the implementation phase, co-engineering meetings and EMC working groups will address SRS antenna coupling and impact on RF performance. However, preliminary, some trade-offs have been already started before the system requirement review (SRR). These are mainly related to the antenna position and the configuration (including position and length) of the solar array. More detailed trade-offs (e.g. solar array grounding architecture and wiring), for which support and information from suppliers are needed, will be performed for the system preliminary design review (PDR).

V. Electromagnetic Environment during SRS Operations

The radar sounder is a source of high field strengths, transmitting 200 W RF chirp pulses, driving specific radiated susceptibility requirements on all electronic equipment on the spacecraft. Being strictly correlated to the antenna gain, the analysis of the electric field around the spacecraft is under prime responsibility.

According to applicable requirement, the spacecraft shall perform within specification when the SRS antenna is transmitting with 53 dBm at the dipole feed. As the far-field gain of the dipole is higher than 2 dBi, high levels of electric field are expected on the spacecraft surfaces. However, thanks to the wavelength (which is around 26 m at 11.5 MHz), the control of spacecraft shielding effectiveness is not as critical as at higher frequencies.

Due to the frequency range of operation, the electric field source is in the extremely near-field region with respect to the spacecraft platform. It is therefore mandatory to approach the analysis using full-wave simulations. Use of far-field approximation has been disregard since the beginning.

The spacecraft structure is modelled as a 2 cm thick aluminium panel. For this frequency range, where basically the electric field is reflected by the metallic surfaces, the use of 2 cm thick panel instead of honeycomb panel is considered adequate. In the next phase, internal shear panels as well as external panels will be replaced with carbon-fibre reinforced polymer (CFRP). The SRS antenna assembly was feed with 200 W (53 dBm) as per requirement but, since the matching network is not yet available, the stimulated 200 W are accepted at the antenna port only at the antenna resonance frequency (8.9 MHz). Based on that, for the time-being, the analysis is limited to this single frequency.

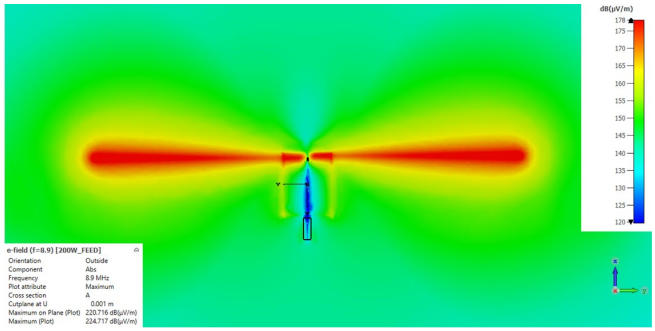

Fig. 7: External field distribution on the top deck at 8.9 MHz.

Starting from the external field distribution on the top deck, which is shown in Fig. 7, a cutting xz-plane has been used to identify the critical areas inside the structure. It has been moved along the y-axis from 5 cm below the top deck up to 2.6 m. As expected, the critical areas are the ones close to the optical instrument (+X panel) and star trackers (-Y and +Y panels) openings. Also the area close to the coaxial cable radiates electric field levels which are higher than the standard level expected for electronic equipment.

Even if there are high level of electric field on the external surface (up to 700 V/m) on the top deck below the antenna, the spacecraft structure act as a good Faraday cage and it is able to limit the electric field, inside the spacecraft, below 20 V/m. The worst-case location is at 5 cm from the star tracker openings, on –Y and +Y panels.

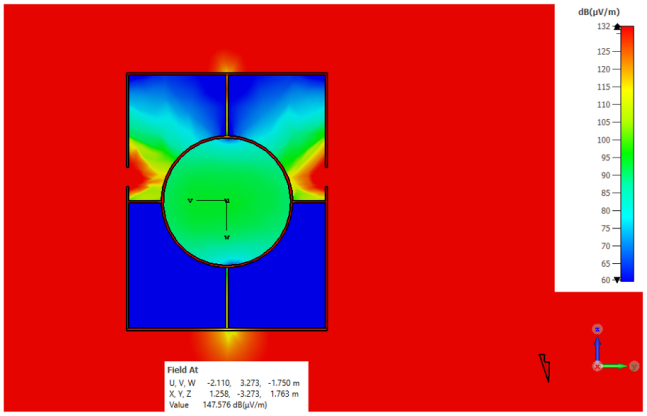

Fig. 8: 2D E-Field distribution on different cutting planes (from left to right): 5cm, 20 cm, 210cm and 260 cm.

VI. Spacecraft Emission Control in the SRS Frequency Range

Due to SRS sensitive receiver and band of operation, the instrument is highly susceptible to radiated interferences in its bandwidth, being the performance threshold set at -6 dB with respect to the galactic noise. The requirement is challenging since, regardless the peak of a single interference, all discrete

lines measured in the receiver bandwidth must be summed in order to have the integrated power at the SRS feed.

Even if there are no external equipment, and the external harness is reduced as much as possible to avoid any interferences during radar operations, the coupling between the antenna and the solar array harness is known [5] as the main source of interferences inside the SRS bandwidth. The solar array harness, which is connected to ground through the PCDU array power regulator (APR) interfaces, acts as an antenna radiating the common-mode noise generated by the PCDU switching elements. This is one of the most important lessons learnt from JUICE: the common-mode sources inside the PCDU exists, and it is the main noise source, being radiated through the solar array panels [5]. JUICE in-flight troubleshooting confirmed that, even if the spacecraft is operated in battery mode (with the APR converter off), also harmonics from all PCDU switching elements (i.e. battery charge and discharge regulator (BCDR), auxiliary supply, etc.) can create interference in the SRS bandwidth. Based on that, in parallel to the control of equipment common-mode and radiated emission, it is fundamental to:

- Control the PCDU design and grounding architecture
- Select power bus topology according to payload requirements (i.e. unregulated bus)
- Filtering common-/differential-mode emission at the APR interface
- Define line impedance stabilization network (LISN) representative of solar array common and differential mode impedance allowing representative conducted emission measurements at PCDU level

The adoption of an electrical power subsystem (EPS) based on a battery bus (28 V unregulated) allows reducing switching noise generated from the PCDU components, being the SRS observations performed only during eclipse. During the SRS science phase, the active power source is the battery which feeds directly the bus (without BCDR). Being the APRs off during eclipse, the only switching elements inside the PCDU are the auxiliary converters as shown in Fig. 9. However, the auxiliaries are not high power converter as the APRs are, and their emissions are expected lower than the ones generated by the conditioning section.

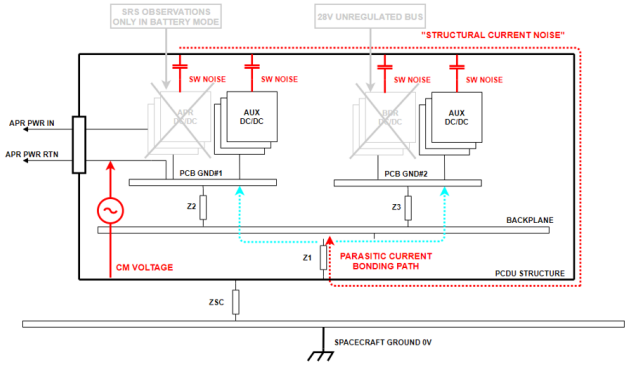

Fig. 9: Envision PCDU switching elements during SRS observations.

Strict control of voltage emission, both common and differential mode, on the interface with the solar array is requested through a set of challenging EMC requirements inside the PCDU specification. The compliance to these requirements could be achieved by introducing a balanced common/differential mode filter as part of the APR module, directly connecting the common-mode capacitance to chassis. This is considered the most efficient way to filter the common-mode emission generated inside the PCDU.

Furthermore, it is essential to control not only the emission from the PCDU but all emission coming from the spacecraft platform, as the frequency range of interest is overlapping with DC/DC converters harmonics, digital clock, software cycling, etc. For that purpose, a coupling analysis between the SRS antenna and a generic source has been performed to derive the applicable requirements for conducted and radiated emission. For the scope of this analysis, a 1.5 m single wire routed over a grounding rail is used as a generic source of electric field. The simplified source is representative of the common-mode loop current between cable shield and ground. The shield is connected to ground with a R-L-C network to simulate properly the impedance in the SRS frequency range since the control of the inductance of the shield connection to ground is considered to be the main driver the common-mode impedance around 9 MHz.

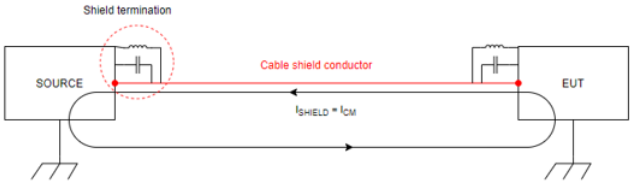

Fig. 10: Common-mode current in the loop between cable shield and ground. Shield termination quality represented with R-L-C network.

The signal is generated using a common-mode current port with a 500 kHz trapezoidal pulse and the electric field is observed using electric probes at 1 m from the source as for standard EMC test setup.

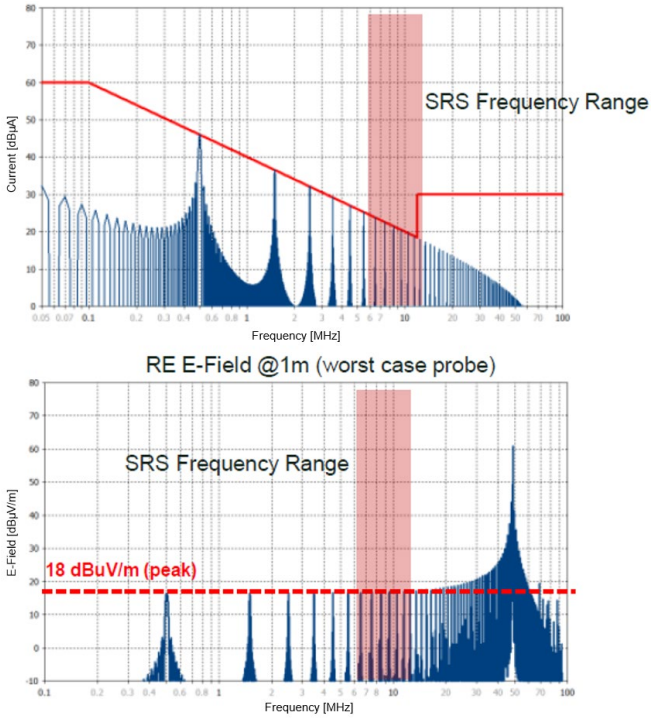

Fig. 11: Common-mode current: 500 kHz trapezoidal pulse Fast-Fourier Transform (top). E-Field radiated from the common-mode loop current.

The generic electric field source, once characterized in free space, is placed inside the spacecraft structure close to the SRS antenna assembly. Two different orientations have been analyzed in order to cover the worst-case scenario:

- Shielded power line routed perpendicular to the antenna
- Shielded power line routed parallel to the antenna

The received peak power at the antenna feed, which is -91 dBm, is computed using the RF model of the SRS antenna assembly with an ideal balun. However, since the requirement is not specified as peak power but integrate power, considering a 500 kHz pulse, there are 6 harmonics falling inside the SRS bandwidth. The total integrated power at the antenna feed, shown in Fig. 12 is therefore -86 dBm, which is only 4 dB lower than the requirements.

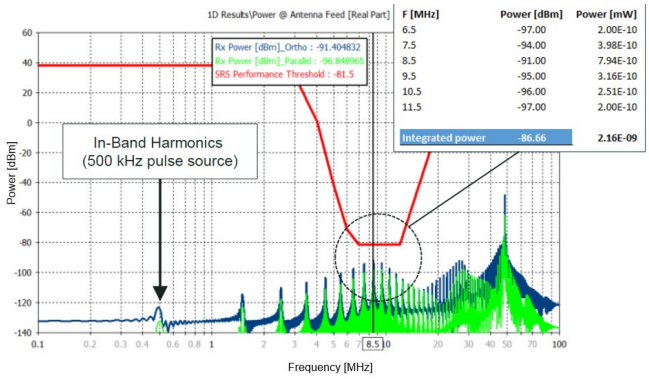

Fig. 12: Peak power computed at the antenna feed (73 Ohm ideal impedance) due to common-mode 500 kHz pulse source.

Nevertheless, if a more realistic 100 kHz pulse source (i.e. common converter switching frequency) is considered in the analysis, there could be up to 26 in-band harmonics resulting in an integrated power exceeding the requirement (-81 dBm vs -82 dBm). Looking to the computed integrated power, without lowering the applicable common-mode emission levels, the mitigation of using shielded cables seems not enough to comply with the SRS requirements. Possible way-forwards are to reduce the levels for equipment conducted emission, which are already challenging, or to implement other techniques to reduce the radiated emission, as the shield multi-point ground connection.

Taking into account the results of the preliminary analysis performed using CST® cable studio, one of the identified solutions consist of connecting the cable shield to ground at least every 500 mm, with a maximum total inductance of 50 nH. This will reduce the radiated electric field from the harness by 12 dB, without changing the common-mode levels. This solution seems promising and it is currently included in the Envision baseline. The main drawbacks are related to mass, mechanical design, processes and flexibility.

Other mitigation strategies will be studied and evaluated during the design phase, by using the model and the approach described within this paper. Possible trade-offs include the improvement of spacecraft shielding effectiveness, harness routing optimization close to the antenna (i.e. requirements on maximum allowed length parallel to the antenna), etc. The described methodology and 3D model will be used also to derive requirements for the solar array wiring and to optimize the bleed resistor grounding architecture.

VII. Conclusion

This paper summarizes the Envision EMC challenges posed by radar sounder instruments. Starting from the JUICE RIME lessons learned, the approach and methodology used to establish requirements and design criteria to comply with the instrument needs are outlined.

The approach is based on a detailed and parametric 3D electromagnetic model established since the beginning of the project. The model, which is described in Section III, has been used to perform radar accommodation trade-off as well as electromagnetic compatibility analysis, detailed study of mitigation strategies and design solutions. The results, coming from the analysis described within this paper, are used to derive essential EMC requirements to ensure the compatibility of the SRS with the spacecraft and its radio-frequency (RF) performance

Early activities, conducted on detailed models, are considered a key element in the design/verification. They allow to increase the knowledge of the issue and to identify, since the beginning, the main areas in which mitigation solutions may be implemented. A hybrid verification approach, based on combination of detailed full wave analysis and testing, is considered the best approach to tackle the verification of stringent EMC and RF requirements imposed by radar sounder instruments like SRS.

The results of the RF analysis used to study the accommodation of the dipole antenna are presented. The achieved performance, which looks more than promising, will be further analysed during the project according to the maturity of the spacecraft design. In addition to the impact of electromagnetic coupling on RF performance, the paper outlined the driving EMC requirements, and how they have been analysed, mitigation strategies and design solutions to comply with the requested instrument performance.

References

[1] "Envision factsheet." Accessed: Jan. 10, 2025. [Online]. Available: https://www.esa.int/Science_Exploration/Space_Science/Envision_factsheet

[2] L. Bruzzone et al., "Envision Mission to Venus: Subsurface Radar Sounding," in IGARSS 2020 - 2020 IEEE International Geoscience and Remote Sensing Symposium, Waikoloa, HI, USA: IEEE, Sep. 2020, pp. 5960–5963. doi: 10.1109/IGARSS39084.2020.9324279.

[3] S. Aliberti, M. B. Quadrelli, and M. Romano, "A distributed space radar sounder using a cross-track flying tethered satellite system," Acta Astronautica, vol. 221, pp. 266–282, Aug. 2024, doi: 10.1016/j.actaastro.2024.05.018.

[4] M. Berens, M. Baroni, Z. Kiss, S. Verstaen, and J. Lange, "An Ambitious Journey to Superior EMC Performance for the Juice Mission," in 2022 ESA Workshop on Aerospace EMC (Aerospace EMC), Virtual: IEEE, May 2022, pp. 1–6. doi: 10.23919/AerospaceEMC54301.2022.9828816.

[5] Z. Kiss, M. Pous, S. Landstroen, S. Verstaen, S. Mercader-Pellicer, "Post-launch system level interference modelling method for JUICE spacecraft," in 2025 ESA Workshop on Aerospace EMC (submitted).