POLITECNICO DI TORINO
Repository ISTITUZIONALE

Comparative Study of Power Prediction for Photovoltaic Modules with Different Technologies Tested in Italy and in Spain

Original
Comparative Study of Power Prediction for Photovoltaic Modules with Different Technologies Tested in Italy and in Spain / Malgaroli, G., Ciocia, A., Gulkowski, S., Diez, J.V.M., Schubert, S., Spertino, F.. - ELETTRONICO. - (2024), pp. 1-6. (24th EEEIC International Conference on Environment and Electrical Engineering and 8th I and CPS Industrial and Commercial Power Systems Europe, EEEIC/I and CPS Europe 2024 Rome (Italy)) [10.1109/EEEIC/ICPSEurope61470.2024.10751240].

Availability:
This version is available at: 11583/2997553 since: 2025-02-17T12:54:40Z

Publisher:
IEEE

Published
DOI:10.1109/EEEIC/ICPSEurope61470.2024.10751240

Terms of use:

This article is made available under terms and conditions as specified in the corresponding bibliographic description in the repository

Publisher copyright
IEEE postprint/Author's Accepted Manuscript

©2024 IEEE. Personal use of this material is permitted. Permission from IEEE must be obtained for all other uses, in any current or future media, including reprinting/republishing this material for advertising or promotional purposes, creating new collecting works, for resale or lists, or reuse of any copyrighted component of this work in other works.

(Article begins on next page)

28 November 2026

Comparative Study of Power Prediction for Photovoltaic Modules with Different Technologies Tested in Italy and in Spain

1st Gabriele Malgaroli
Dept. of Energy "Galileo Ferraris"
Politecnico di Torino
Torino, Italy
gabriele.malgaroli@polito.it

2nd Alessandro Ciocia
Dept. of Energy "Galileo Ferraris"
Politecnico di Torino
Torino, Italy
alessandro.ciocia@polito.it

3rd Slawomir Gulkowski
Dept. of Renewable Energy Eng.
Lublin University of Technology
Lublin, Poland
s.gulkowski@pollub.pl

4th José Vicente Muñoz Díez
Grupo de Investigacion IDEA
Universidad de Jaén
Jaén, Spain
jmunoz@ujaen.es

5th Stefano Schubert
Dept. of Energy "Galileo Ferraris"
Politecnico di Torino
Torino, Italy
stefano.schubert@polito.it

6th Filippo Spertino
Dept. of Energy "Galileo Ferraris"
Politecnico di Torino
Torino, Italy
filippo.spertino@polito.it

Abstract

The performance of photovoltaic (PV) modules can be assessed using several models, with the most common being the Osterwald model, which states PV power is proportional to solar irradiance. However, the models based on electrical equivalent circuits, which have a variable number of parameters affected by environmental conditions like irradiance and temperature, can be used to increase the accuracy of PV power estimation. Actually, understanding these parameters in any weather condition can help predict PV generators' performance with higher accuracy than commonly used analytical models. This work is inserted in a research field aiming to develop a model for the automatic diagnosis of PV plants by their inverters based on the equivalent circuit's parameters. This study compares the application of a method for evaluating PV power based on the single diode model to PV modules tested at two different installation sites. The devices under test are 7 modules, tested in Turin (Italy) and Jaén (Spain), with different technologies, rated power (up to 370 W) and efficiency (up to ≈21%). The accuracy of such a technique is validated by comparing the power estimation by such a methodology with that of the Osterwald model.

Index Terms

high efficiency PV modules, equivalent circuit's parameters, single diode model, parameters extraction, Simulated Annealing, Nelder–Mead.

I. Introduction

The exploitation of Renewable Energy Sources (RES) [1] is one of the actual challenges to reduce the polluting emissions and the environmental impact of power generation systems. Currently, PV and wind power systems are the most widespread renewable energy systems over the world. The main research activities regard the enhancement of their self-sufficiency and self-consumption [2], and the development of methods to correctly estimate their performance and compare measurements with manufacturer specifications [3]. Among the RES, the PhotoVoltaic (PV) technology is the most relevant and reliable [4] due to the low costs related to its installation, operation, and maintenance [5]. Equivalent electrical circuits may be used to measure the output of PV generators, and one of the most important research topics being investigated by PV industry experts is determining the parameters for these circuits [6].

In literature, several equivalent circuits are proposed, including the simplest model, which is a 3-parameter model, and the most complex one, that is a 9-parameter model. The accuracy of circuits with many parameters is, generally, higher than simpler circuits, but the computational cost required to extract the parameters is higher as well. Hence, the optimal trade-off between high accuracy and low computational cost in the parameters extraction process needs to be addressed [7]. However, since the parameters are affected by environmental circumstances, their values change according to the operating scenario of the modules. Several techniques are provided to determine the parameters from measurements [8] and the best are evolutionary methods [9], with the most diffused algorithms being: Levenberg-Marquardt (LM) [7], Simulated-Annealing (SA) [10], Nelder Mead (NM) [11], Newton Raphson algorithms [12], genetic algorithm [13], and particle swarm optimization (PSO) algorithm [14].

This paper is inserted in a line of research aiming to propose a methodology for the automatic fault detection of PV plants. Current diagnosis techniques are based on conventional tests as the infrared thermography or electroluminescence [15]; however, these tests are expensive as Multi-MW PV plants, generally, require the use of drones [16], and a continuous monitoring of the state of health for PV plants is not possible. Hence, this line of research proposes to develop a sensorless technique, in which the inverters will extract in real time the equivalent circuit's parameters and they will compare such values with reference parameters, corresponding to healthy modules. This work applies the method presented in [17] to predict PV power using information from the equivalent circuit's parameters. Such quantities are identified by using an evolutionary method that is a combination of the SA and NM algorithms. The innovative aspect of this work regards the application of this technique to seven PV modules and the comparison between the results from two different locations (Turin, Italy

and Jaén, Spain). The modules vary in terms of technology and nominal power, which ranges from 100 W to 370 W. The technique is validated by comparing the power prediction with measurements and with the results from the Ostwerald model, which indicates that PV power is proportional to irradiance and depends on temperature through an appropriate temperature coefficient [18]. Although other empirical models are available in the literature, their coefficients are significantly influenced by the devices under test, potentially reducing their effectiveness with different PV generators. An example of an empirical model is provided in [19].

The organization of the paper is the following: Section II describes the measurement systems used to obtain the current-voltage (*I-V*) curves of the analysed PV modules. The specifications of the PV modules are provided in Section III, while Section IV contains the results after parameters extraction and power estimation. Finally, Section V offers the conclusions.

II. Measurement System

This research examines data obtained from two distinct electronic measuring systems that undergo periodic calibration. The Universidad de Jaén (Jaén, Spain) has the second system installed, whilst Politecnico di Torino (Turin, Italy) has the first. The same configuration is used to determine the *I-V* characteristic of the modules: a power breaker regulates the operation of a power generator that supplies a capacitor, initially discharged. The PV module feeds the capacitive load from the short-circuit condition to the open-circuit condition when the circuit closes. Typically, the required charging transient time (t) dictates the capacitance of the capacitive load. According to [20], the capacitance of the load is chosen in Italy to achieve transient durations < 1 s for any measurement condition. In this measuring system, an Automatic Data Acquisition System (ADAS) permits to acquire the irradiance, air temperature T_a, PV current and voltage. The ADAS is made up of the following parts and is calibrated on a regular basis:

- A laptop computer running the LabVIEW application simulates a waveform logger
- An A/D converter (resolution of 16-bit, sampling rate up to 1.25 MSa/s, maximum input of ±10 V) and multiplexer are included on a multifunction data collection board.
- A differential voltage sensor that can withstand voltage levels of as high as 1400 V, with two attenuation ratios of 20:1 and 200:1.
- Two current sensors (Hall effect), one for measuring current and the other to act as a trigger source (output sensitivity of 100 mV/A for currents reaching ±30 A).
- A secondary standard pyranometer measures irradiance with less than ±2% uncertainty.
- A thermometer to measure the module's backside temperature.
- A thermometer to acquire ambient temperature.

The scheme of the circuit used in Italy is reported in Fig. 1.

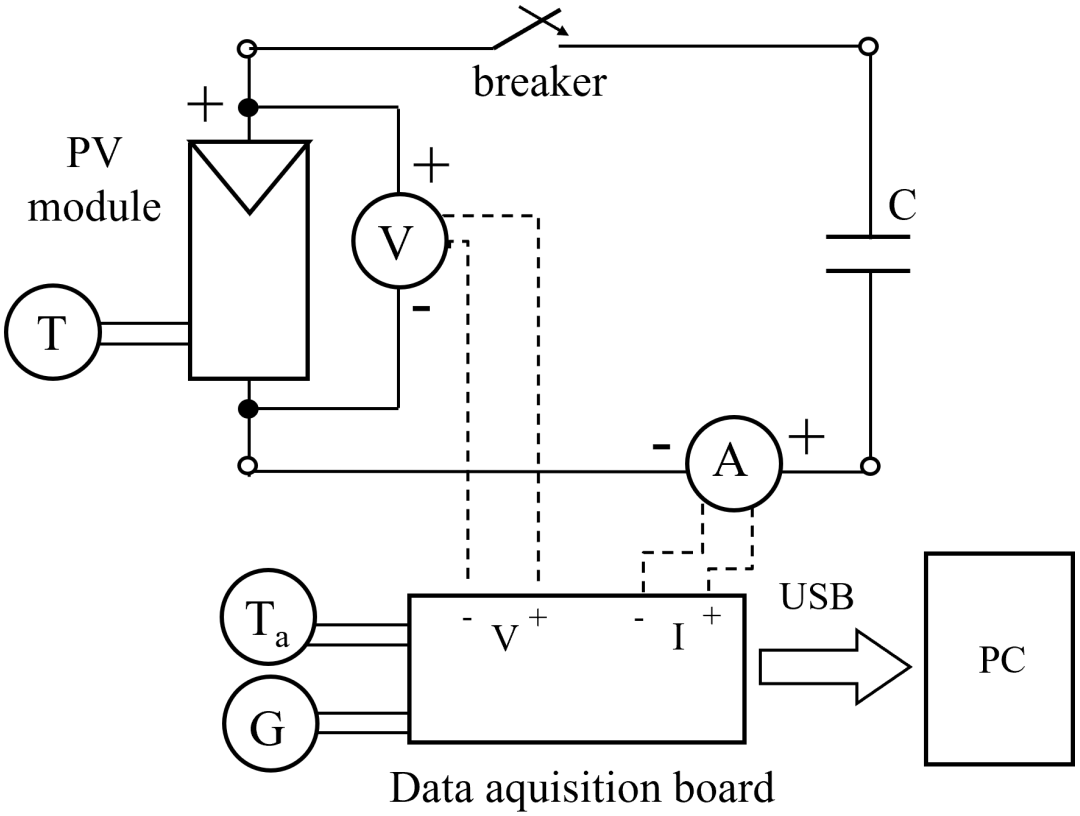

Fig. 1: Schematic of the measurement circuit in Italy.

The two distinct systems in Spain that make use of the created ADAS are situated on the roof of the Universidad de Jaén solar energy laboratory. The fact that one of the two systems has a two-axis sun tracker is one of their primary distinctions.

This system is called the "Tracking System", while the other is called the "Fixed System". The devices allow to periodically acquire weather quantities and the characteristic curves of four PV modules. The layout of the two systems is shown in Fig. 2; the equipment in purple and orange rectangles belongs to the TS and FS, respectively, while the elements in blue rectangles are shared components. The majority of the components are located in the laboratory, but the sensors for gathering the primary data (voltage, current, irradiance, air temperature, and module temperature), as well as the PV modules and their iron support, are mounted on the roof.

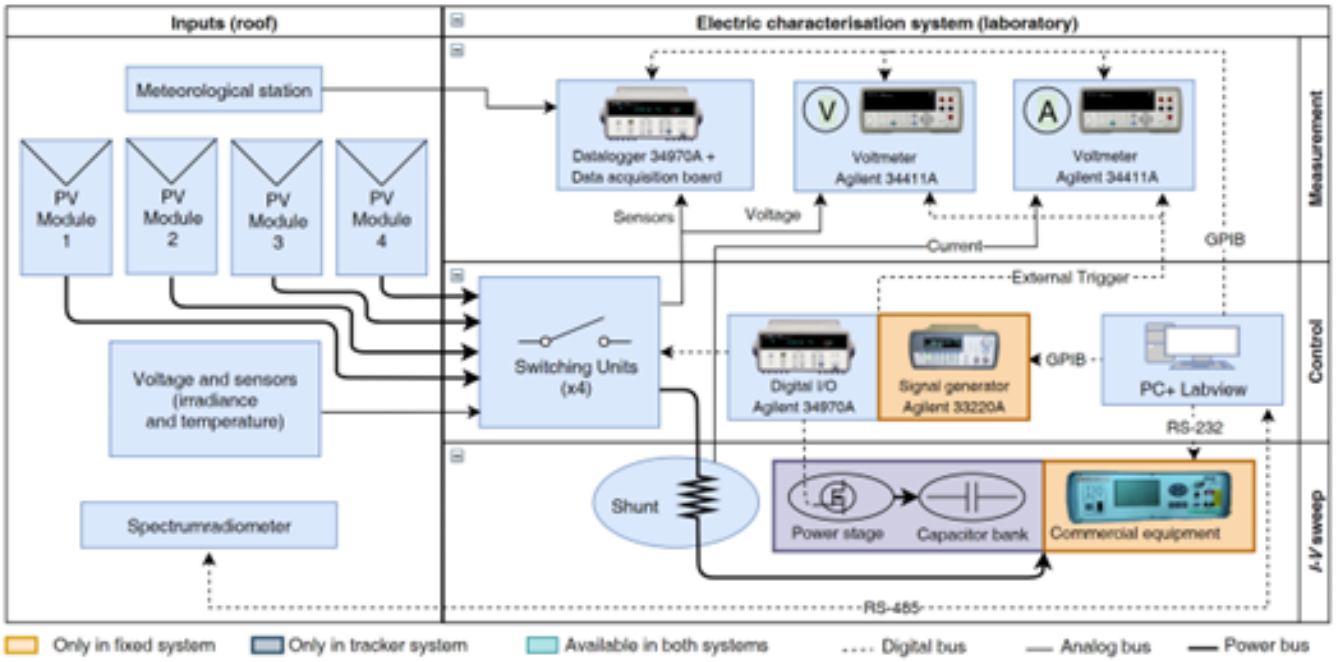

Fig. 2: Schematic of the measurement circuit in Spain.

The following elements make up the ADAS in the Spanish tracking system:

- Every PV module has a circuit board, created by the Universidad de Jaén's IDEA research team, in its junction box.
- One Pt100 sensor is placed on the rear of each PV module to measure PV temperature.
- Two highly accurate multimeters monitor the voltage drop across the PV terminals and over a shunt resistor with class 0.5 to determine the current. The multimeters have a resolution of 6 $\frac{1}{2}$ digits and an uncertainty < 1 mV under operational circumstances.
- A load that is capacitive and has a capacitance of 10 mF.
- An additional standard pyranometer obtains irradiance with $< 2\%$ inaccuracy.
- A datalogger (6 $\frac{1}{2}$ digits and uncertainty = $\pm 0.04\%$ on an annual basis) that operates at up to 300 V and 1 A functions as a trigger to synchronise the multimeters.

It is noteworthy that the energy output of any PV module undergoing test may be measured by any of the Jaén methods with an error of less than $\pm 1.3\%$.

III. Modules under Test

According to the manufacturer's datasheet, Tables I and II report the principal electrical characteristics of the PV generators under test (Fig. 3). Such parameters were verified at the beginning of the campaign: their *I-V*curves were measured outdoor and corrected to Standard-Test-Conditions (STC, with irradiance of 1000 $\mathrm{W/m^2}$ and cell temperature of 25 °C) according to the standards. In addition, the modules #4-#7 were subject to an ElectroLuminescence (*EL*) [15] analysis to detect defects and mechanical cracks. According to these preliminary tests, the maximum power offset compared to the manufacturer data were included in the measurement system's uncertainty range, and defects or issues were not detected from the *EL* test.

TABLE I: Manufacturer parameters of PV module tested at University of Jaén.

ID	#1	#2	#3
P_{nom}	135 W	100 W	245 W
η_{STC}	13.5%	15.5%	14.9%
V_{oc}	22.1 V	21.6 V	37.5 V
I_{sc}	8.37 A	5.87 A	8.73 A
α	0.06%/°C	0.05%/°C	0.05%/°C
β	-0.36%/°C	-0.35%/°C	-0.347%/°C
Power tolerance	(-5%, +5%)	(0, +5%)	(-5%, +10%)



#1
p-Si



#2
m-Si



#3
m-Si



#4
m-Si



#5
m-Si (all-back contact)



#6
p-Si



#7
p-Si (half cells)

Fig. 3: Devices under analysis.

TABLE II: Manufacturer parameters of PV modules tested at Politecnico di Torino.

ID	#4	#5	#6	#7
P_{nom}	310	370	280	285
η_{STC}	19%	21.4%	17.1%	17.1%
V_{oc}	40.3 V	42.8 V	38.65 V	38.6 V
I_{sc}	9.91 A	10.82 A	9.37 A	9.66 A
α	0.06%/°C	0.04%/°C	0.058%/°C	0.066%/°C
β	-0.3%/°C	-0.24%/°C	-0.33%/°C	-0.3%/°C
Power tolerance	(0, +5W)	(0, +3%)	(0, +5W)	(0, +5W)

IV. Results

Two universities hosted the testing session of the modules under investigation in 2021: the Universidad de Jaén in Spain and the Politecnico di Torino in Turin, Italy. The campaign ran from March to May. The generators under analysis were tested in a wide range of weather conditions in terms of irradiance and module temperature with up to about 200 curves acquired for the PV modules with the largest dataset.

Actually, the levels of irradiance ranged from 150 $\mathrm{W/m^2}$ to 1100 $\mathrm{W/m^2}$, as the modules' temperature varied between 25 °C – 70 °C. Ad hoc filters permitted to select experimental data measured under stable environmental conditions in terms of irradiance, modules' temperature, and wind speed.

There are two stages in the approach used in this paper. In the first step, the equivalent circuit's parameters were numerically determined for each experimental *I-V*curve by integrating the Simulated-Annealing and Nelder Mead algorithms and solving the following equation:

$$I = I_{ph} - I_0 \cdot \left(\exp\left(\frac{q \cdot V_j}{n \cdot k_B \cdot T} \right) - 1 \right) - \frac{(V + R_s \cdot I)}{R_{sh}} \tag{1}$$

The distributions of the $I-V$ curve's Normalised Root Mean Square errors (*NRMSE*) and its variance at the maximum power point (*MPP*) are shown in Fig. 4 [21]. The difference between the $I-V$ curve derived from measurements and from the parameters is assessed by the *NRMSE*:

$$NRMSE = \frac{\sqrt{\frac{\sum_{i=1}^{N}(I_{i,mod} - I_{i,exp})^2}{N}}}{\frac{\sum_{i=1}^{N} I_{i,exp}}{N}} \tag{2}$$

where, for each ith voltage value from experimental *I-V* curve, $I_{\mathrm{i,mod}}$ is the current from the curve evaluated using the equivalent circuit's parameters, while $I_{\mathrm{i,exp}}$ is the corresponding current from measurements. The second quantity quantifies the deviation between the maximum power of the curves from experimental data and from the model using the equivalent circuit's parameters. The best fitting occurs for the modules tested in Spain, in particular for modules #1 and #2 (blue and orange points in the top left area of the figure), which exhibit the lowest values of *NRMSE* and error at the *MPP*. Although PV modules #4 and #5 have high efficiency technology (Passivated Emitter and Rear Contact (PERC) and all-back technology, respectively), the matching with the model is fine and comparable with the other modules under test. In addition, the worst numerical extraction is for polycrystalline silicon modules, but their results are acceptable. Indeed, Fig. 4 confirms the efficiency for the numerical extraction of equivalent circuit's parameters since most of $NRMSE$s were $< 1.5\%$ and most of the errors at the MPP ranged between $\pm 1\%$.

The second step of the method consisted of optimizing the bold coefficients in **blue** for the following equations from [7] according to nonlinear fitting. This operation aimed to determine optimized coefficients to evaluate the parameters as functions of irradiance G and modules temperature T_{c}:

$$I_{ph} = \boldsymbol{I_{ph,STC}} \cdot [1 + \alpha \cdot (T_c - T_{c,STC})] \cdot \frac{G}{G_{STC}} \tag{3}$$

with α being the thermal coefficient for I_{SC} (1/K), $T_{\mathrm{c,STC}}$ is 25°C, G_{STC} is $1000 W/m^2$, $I_{\mathrm{ph,STC}}$ is the photogenerated current at STC (**S**tandard **T**est **C**onditions).

$$I_0 = \boldsymbol{I_{0,STC}} \cdot \left(\frac{T_c}{T_{c,STC}} \right)^3 \cdot \exp\left[\left(\frac{E_{g,STC}}{T_{STC}} - \frac{E_g(T_c)}{T_c} \right) \cdot \frac{1}{k_b} \right] \tag{4}$$

where $E_{\mathrm{g,Tc}}$ and $E_{\mathrm{g,STC}}$ are the energy gap of the semiconductor material evaluated at temperature T_{c} and at STC, respectively; $I_{\mathrm{0,STC}}$ is the reverse saturation current at STC.

$$n = \boldsymbol{n_0} + \boldsymbol{n_G} \cdot G + \boldsymbol{n_T} \cdot T_c \tag{5}$$

The *n* dependence on weather conditions is not unique in the literature. In this paper, a linear dependence on G and T_{c} is assumed with coefficients n_0, n_{G} and n_{T}. This is confirmed by the results of the analysis.

$$R_s = \boldsymbol{R_{s,STC}} \cdot \frac{T_c}{T_{c,STC}} \cdot \left(1 - \boldsymbol{k_{\mathrm{Rs}}} \cdot \ln\left(\frac{G}{G_{STC}} \right) \right) \tag{6}$$

where $R_{\mathrm{s,STC}}$ is the STC series resistance, and k_{Rs} is a coefficient taking into account the irradiance effect on R_{s}.

$$R_{sh} = \boldsymbol{R_{sh,STC}} \cdot \frac{G_{STC}}{G} \tag{7}$$

where $R_{\mathrm{sh,STC}}$ is the shunt resistance at STC.

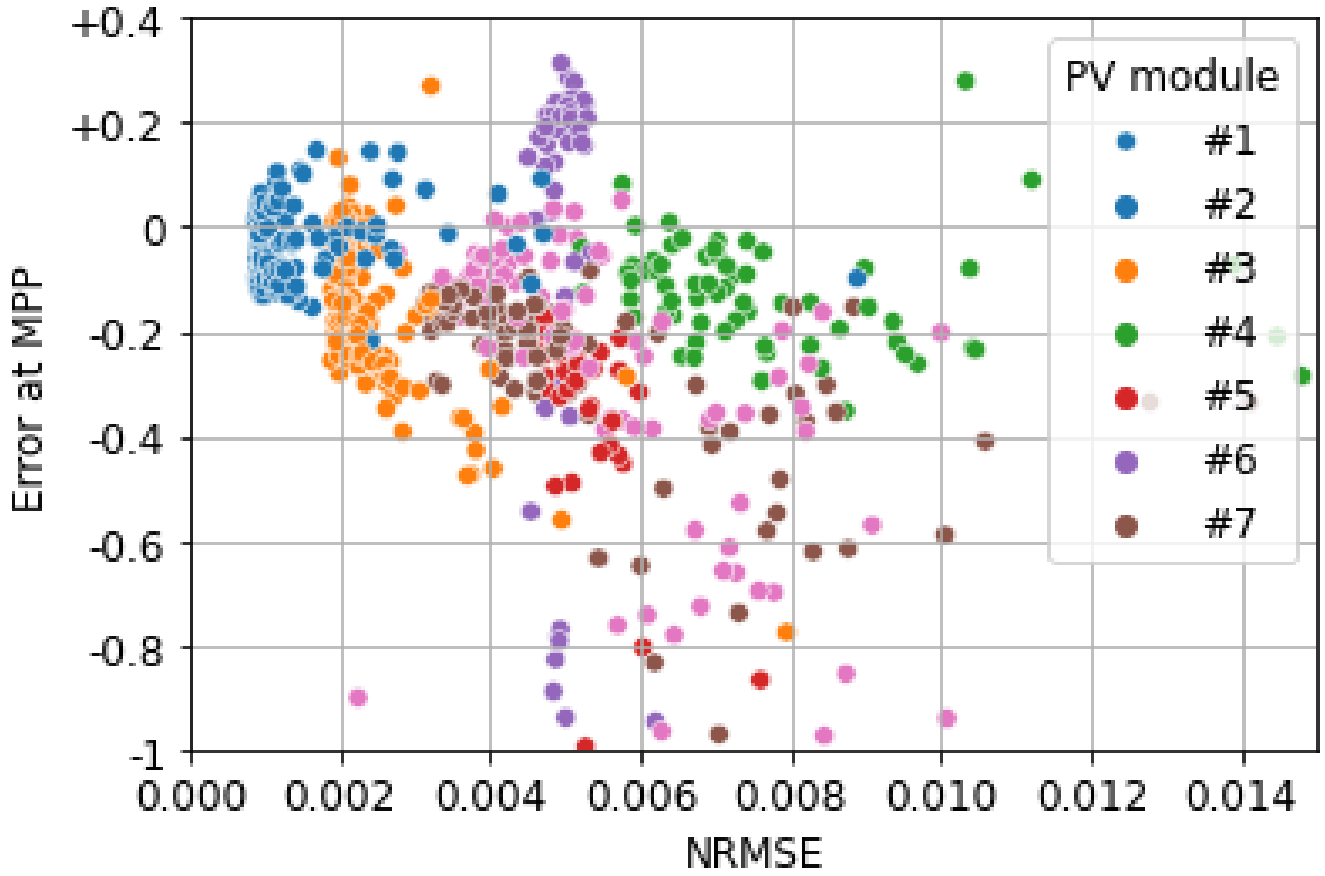

Fig. 4: Distribution of *NRMSE* for the $I-V$ curve and of the error at the *MPP*.

Fig. 5 presents the results of equivalent circuit's parameters estimation for each PV module under test as each subfigure contains the optimized equations (curves) and the equivalent circuit's parameters from measurements (dots) for a specific parameter. The figures confirm the quality of the results, in particular regarding the parameters I_0 and R_s as they are the most difficult to identify numerically since they might be affected by the overfitting problem (i.e., multiple sets of equivalent circuit's parameters permit to determine the same *I-V* curve, with possible unrealistic parameters). The optimal coefficients are reported in Table III. With respect to the reverse saturation current, the optimised parameter $I_{0,\mathrm{STC}}$, with a value in the range $\approx 10^{-9} - 10^{-8}$ A, is similar across all the modules that are being tested. In addition, the ranges for I_0 are similar among the generators except for PV module #3, which exhibits slightly higher I_0 values than the others (about two orders of magnitude).

The extracted n values range from 1 to 2, except for PV module #7, for which n is almost constant and equal to 0.58. This might be due to its PV cells connection inside the module, which is different from the others because it has half cells to reduce their mismatch losses. Moreover, such a parameter is almost constant in the irradiance and temperature ranges except for modules #2 and #5 since it increases with higher irradiance and temperature.

Finally, the figure with the shunt resistance R_{sh} dependence on irradiance is omitted. In many reserach papers, such a quantity tends to be unrealistic, and, as a consequence, many works use equivalent circuits with four parameters only, excluding R_{sh}. This choice is justified by its impact on the *I-V* formula, which is negligible [22]. The value of R_{sh} might become important in case of shading since the slope of the *I-V*curve in the neighborhood of the short circuit, which is linked to the shunt resistance, might change. In this study, R_{sh} is assumed to be constant in the situation of scattered values (marked with * symbol in Table III) and equal to its average value.

The $NRMSEs$ of power estimation with respect to experimental data are reported for each module in Fig. 6. For all the modules under test, the optimised equations (blue bars) perform better than the Osterwald Model (purple bars), providing significantly reduced differences from the experiments, with an improvement in the range between 5% and 48% (Spain) and in the range 5% - 37% (Italy). These results confirm the effectiveness of the methodology, which can lead to noticeable improvements for case studies in countries of the Mediterranean area.

V. Conclusions

In literature, most of models analytically assess PV performance with an Irradiance-Proportionality (I-P) law. This paper applied a technique for evaluating the PV power by determining their equivalent circuit's parameters in any weather condition with higher accuracy than I-P models. The methodology was based on the single diode model and was applied to 7 PV modules with different technology, rated power (up to 370 W), and efficiency up to $\approx 21\%$. Such generators were tested in two experimental campaigns with a wide range of irradiance and modules' temperature acquired: one in Italy and the other in

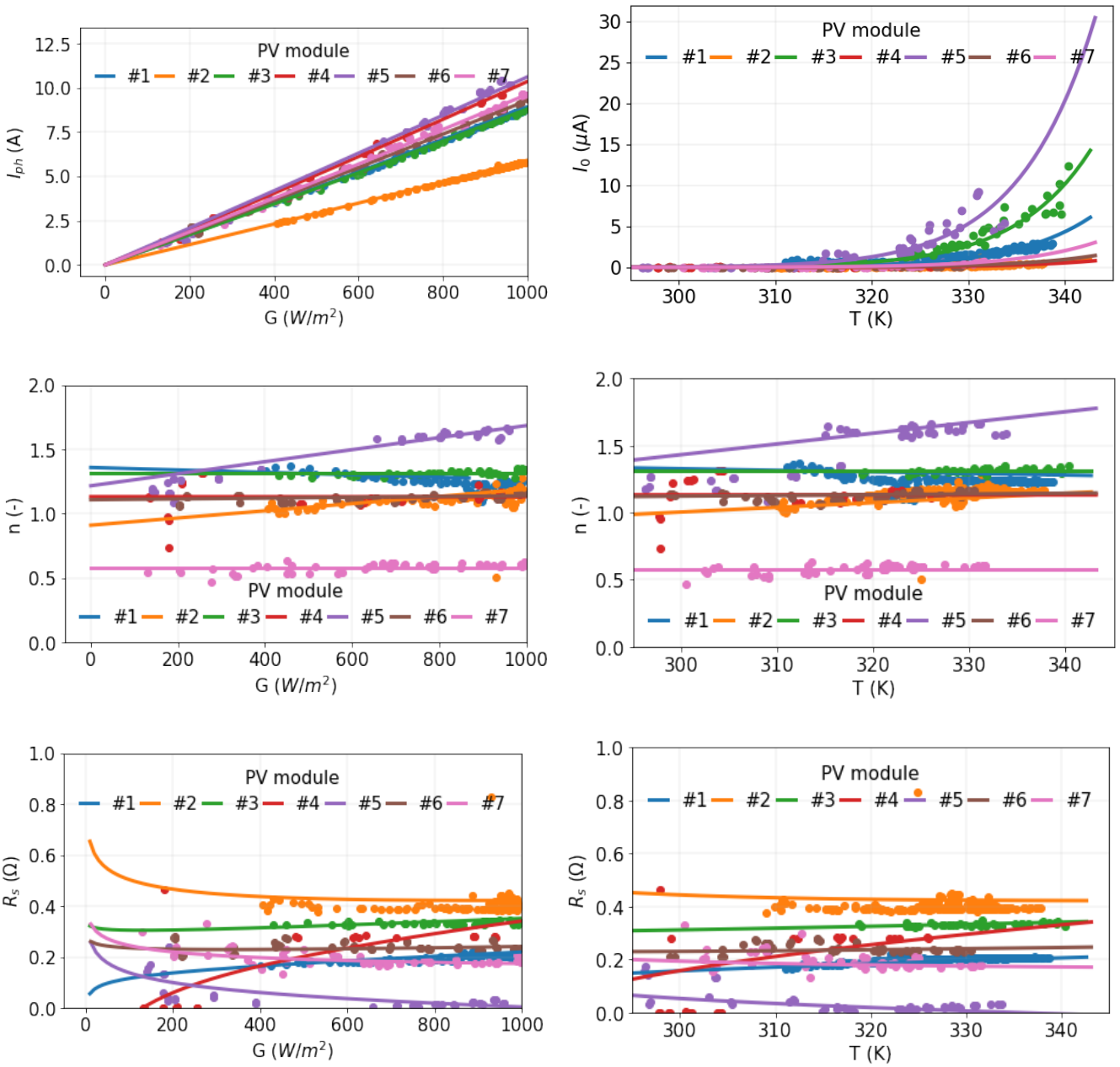

Fig. 5: Parameters of the equivalent circuit as functions of G and T_c

TABLE III: Main optimized parameters for the PV generators ($^*R_{\text{sh}} = \text{const}$)

Module ID	#1	#2	#3	#4	#5	#6	#7
$I_{\text{sc,STC}}$**(A)**	8.64	5.74	8.55	10.08	10.47	9.11	9.42
$I_{\text{0,STC}}$**(A)**(10^{-9})	8.90	1.52	20.8	1.10	41.7	1.97	4.08
$n_{\mathbf{0}}$	0.80	0.58	1.14	1.30	2.48	1.49	0.58
$n_{\mathbf{G}}(m^2/W)(10^{-5})$	-25.7	18.2	5.42	4.23	73.7	11.3	-
$n_{\mathbf{T}}$**(1/°C)**(10^{-4})	20.3	12.2	3.74	-6.10	-46.2	-13.9	-
$R_{\text{s,STC}}(\Omega)$	0.19	0.36	0.30	0.30	0.0037	0.22	0.16
$k_{\mathbf{Rs}}$	-0.15	0.12	0.04	-0.49	17.19	0.07	0.29
$R_{\text{sh,STC}}(\Omega)$	179.3	5090*	1000*	1000*	112.1	1032*	348*

Spain in 2021, March - May. In this research, optimized equations were identified outlining how each parameter is affected by the weather to predict PV power under variable weather conditions. The results demonstrated that the optimized equations improved the accuracy of power estimations with respect to Osterwald model for the modules tested in both locations, with an improvement in the range 5% - 48% (Spain) and 5% - 37% (Italy). In the future, the work will be improved by applying the technique in the PV energy estimation with days or months of measurements, and will be integrated in in-filed applications: actually, the inverters will integrate optimized equations estimating reference equivalent circuit's parameters of healthy modules for variable operating conditions, and these values will be compared with experimental parameters to identify faults or failures.

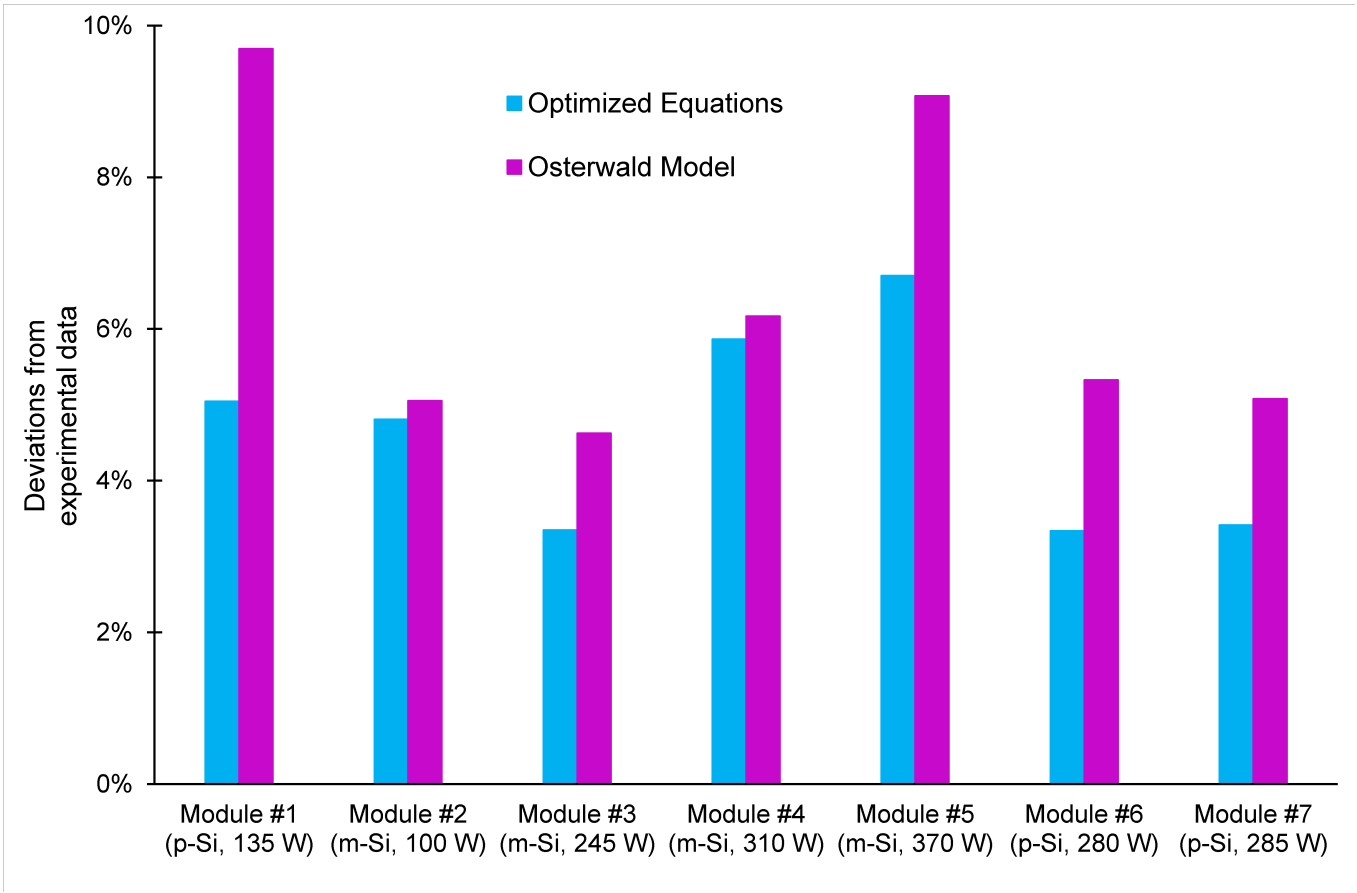

Fig. 6: Model deviations with respect to measurements for energy estimation

REFERENCES

[1] F. Spertino, G. Chicco, A. Ciocia, G. Malgaroli, A. Mazza, and A. Russo, "Harmonic distortion and unbalance analysis in multi-inverter photovoltaic systems," *SPEEDAM 2018 - Proceedings: International Symposium on Power Electronics, Electrical Drives, Automation and Motion*, pp. 1031–1036, 8 2018.

[2] P. D. Leo, F. Spertino, S. Fichera, G. Malgaroli, and A. Ratclif, "Improvement of self-sufficiency for an innovative nearly zero energy building by photovoltaic generators," in *2019 IEEE Milan PowerTech*, 2019, pp. 1–6.

[3] A. Carullo, A. Ciocia, P. Di Leo, F. Giordano, G. Malgaroli, L. Peraga, F. Spertino, and A. Vallan, "Comparison of correction methods of wind speed for performance evaluation of wind turbines," *24th IMEKO TC4 International Symposium and 22nd International Workshop on ADC and DAC Modelling and Testing*, p. 291 – 296, 2020.

[4] A. Livera, Fernández-Solas, J. G. Bessa, J. Montes-Romero, E. F. Fernández, V. Papaeconomou, and G. E. Georghiou, "Reducing the photovoltaic operation and maintenance costs through an autonomous control operation center," in *2023 IEEE 50th Photovoltaic Specialists Conference (PVSC)*, 2023, pp. 1–6.

[5] F. Spertino, E. Chiodo, A. Ciocia, G. Malgaroli, and A. Ratclif, "Maintenance activity, reliability, availability, and related energy losses in ten operating photovoltaic systems up to 1.8 mw," *IEEE Transactions on Industry Applications*, vol. 57, pp. 83–93, 1 2021.

[6] A. Harrag and S. Messalti, "Extraction of solar cell parameters using genetic algorithm," in *2015 4th International Conference on Electrical Engineering, ICEE 2015*, 2016.

[7] A. K. Tossa, Y. M. Soro, Y. Azoumah, and D. Yamegueu, "A new approach to estimate the performance and energy productivity of photovoltaic modules in real operating conditions," *Solar Energy*, vol. 110, 2014.

[8] S. T. Kebir, M. Haddadi, and M. S. Ait-Cheikh, "An overview of solar cells parameters extraction methods," in *3rd International Conference on Control, Engineering and Information Technology, CEIT 2015*, 2015.

[9] D. H. Muhsen, A. B. Ghazali, T. Khatib, and I. A. Abed, "A comparative study of evolutionary algorithms and adapting control parameters for estimating the parameters of a single-diode photovoltaic module's model," *Renewable Energy*, vol. 96, 2016.

[10] U. Jadli, P. Thakur, and R. D. Shukla, "A New Parameter Estimation Method of Solar Photovoltaic," *IEEE journal of photovoltaics*, vol. 8, no. 1, pp. 239–247, 2018.

[11] M. Oumaima, T. Mouhavdine, F. M. Janeiro, H. Abdeloawahed, and K. Khalid, "Estimation of photovoltaic panel parameters by a numerical heuristic searching algorithm," in *2019 8th International Conference on Renewable Energy Research and Applications (ICRERA)*, 2019, pp. 401–406.

[12] H. M. Ridha, H. Hizam, S. Mirjalili, M. L. Othman, M. E. Ya'acob, and L. Abualigah, "A novel theoretical and practical methodology for extracting the parameters of the single and double diode photovoltaic models," *IEEE Access*, vol. 10, pp. 11 110–11 137, 2022.

[13] M. Moutchou and Y. Abouelmahjoub, "Model parameters identification of a photovoltaic module, based on fabricant datasheet information and by using a genetic algorithm," in *2021 International Conference on Electrical, Computer, Communications and Mechatronics Engineering (ICECCME)*, 2021, pp. 1–6.

[14] M. Merchaoui, A. Sakly, and M. F. Mimouni, "Particle swarm optimisation with adaptive mutation strategy for photovoltaic solar cell/module parameter extraction," *Energy Conversion and Management*, vol. 175, 2018.

[15] A. Ciocia, A. Carullo, P. Di Leo, G. Malgaroli, and F. Spertino, "Realization and use of an ir camera for laboratory and on-field electroluminescence inspections of silicon photovoltaic modules," in *2019 IEEE 46th Photovoltaic Specialists Conference (PVSC)*, 2019, pp. 2734–2739.

[16] F. Bizzarri, S. Nitti, and G. Malgaroli, "The use of drones in the maintenance of photovoltaic fields," *E3S Web of Conferences*, vol. 119, p. 21, 2019.

[17] F. Spertino, G. Malgaroli, A. Amato, M. Qureshi, A. Ciocia, and H. Siddiqi, "An innovative technique for energy assessment of a highly efficient photovoltaic module," *Solar*, vol. 2, 2022.

[18] M. B. Campanelli and C. R. Osterwald, "Effective irradiance ratios to improve I-V curve measurements and diode modeling over a range of temperature and spectral and total irradiance," *IEEE Journal of Photovoltaics*, vol. 6, no. 1, 2016.

[19] A. . Al-Bashir, M. . Al-Dweri, and A. Alghandoor, "Analysis of effects of solar irradiance, cell temperature and wind speed on photovoltaic systems performance," *International Journal of Energy Economics and Policy*, vol. 10, no. 1, pp. 353–359. [Online]. Available: https://www.econjournals.com/index.php/ijeep/article/download/8591/4791.http://hdl.handle.net/11159/8243

[20] F. Spertino, J. Ahmad, A. Ciocia, P. D. Leo, A. F. Murtaza, and M. Chiaberge, "Capacitor charging method for i–v curve tracer and mppt in photovoltaic systems," *Solar Energy*, vol. 119, pp. 461–473, 2015.

[21] Y. Sun, Y. Wu, J. Liu, S. Zhang, G. Li, G. Zou, and K. Zhang, "Ultra-short-term photovoltaic power prediction based on improved kmeans algorithm and vmd-svr-lstm model," in *2022 6th International Conference on Power and Energy Engineering (ICPEE)*, 2022, pp. 47–51.

[22] D. H. Muhsen, A. B. Ghazali, T. Khatib, and I. A. Abed, "A comparative study of evolutionary algorithms and adapting control parameters for estimating the parameters of a single-diode photovoltaic module's model," *Renewable Energy*, vol. 96, pp. 377–389, 2016.