POLITECNICO DI TORINO
Repository ISTITUZIONALE

Feasibility of biogas upgrading at a WWTP after pre-treatment application: Techno-economic assessment validation with pilot test data

Original
Feasibility of biogas upgrading at a WWTP after pre-treatment application: Techno-economic assessment validation with pilot test data / Campo, G., Cerutti, A., Zanetti, M., Ruffino, B.. - In: JOURNAL OF ENVIRONMENTAL MANAGEMENT. - ISSN 1095-8630. - ELETTRONICO. - 370:(2024), p. 122780. [10.1016/j.jenvman.2024.122780]

Availability:
This version is available at: 11583/2993873 since: 2024-10-30T09:57:34Z

Publisher:
ACADEMIC PRESS LTD- ELSEVIER SCIENCE LTD

Published
DOI:10.1016/j.jenvman.2024.122780

Terms of use:

This article is made available under terms and conditions as specified in the corresponding bibliographic description in the repository

Publisher copyright
Elsevier postprint/Author's Accepted Manuscript

© 2024. This manuscript version is made available under the CC-BY-NC-ND 4.0 license
http://creativecommons.org/licenses/by-nc-nd/4.0/.The final authenticated version is available online at:
http://dx.doi.org/10.1016/j.jenvman.2024.122780

(Article begins on next page)

28 November 2026

Journal of Environmental Management 370 (2024) 122780



Contents lists available at ScienceDirect

Journal of Environmental Management

journal homepage: www.elsevier.com/locate/jenvman



Research article

Feasibility of biogas upgrading at a WWTP after pre-treatment application: Techno-economic assessment validation with pilot test data

Giuseppe Campo, Alberto Cerutti, Mariachiara Zanetti, Barbara Ruffino *

DIATI, Department of Environment, Land and Infrastructure Engineering, Politecnico di Torino, Corso Duca degli Abruzzi 24, 10129, Torino, Italy

ARTICLE INFO

Handling editor: Raf Dewil

Keywords:
Biogas upgrading
Waste activated sludge
membrane
Biological hydrolysis
Two-stage anaerobic digestion
Energy neutrality

ABSTRACT

Improving the efficiency of anaerobic digestion (AD) of sewage sludge (SS) is a critical step toward the achievement of energy neutrality in wastewater treatment plants (WWTPs), as required by the European Green Deal. This study used a comparative techno-economic assessment (TEA) to evaluate the feasibility of producing biomethane, at a WWTP, through upgrading biogas with a double-stage permeation membrane plant. The biogas was originally generated from the AD of a mixture of primary sludge (PS) and either raw or pre-treated waste activated sludge (WAS), where biological or thermo-alkali pre-treatments were applied to increase the WAS intrinsic low degradability.

The TEA was supported by the results of pilot-scale tests, carried out on WAS, which mimicked (i) a traditional mesophilic AD process; (ii) a two-stage AD process, where a temperature-phased anaerobic digestion (TPAD, 3 days, 55 °C + 20 days, 38 °C) was performed to biologically pre-treat WAS; (iii) a traditional mesophilic AD process preceded by a thermo-alkali (4 g NaOH/100 g TS, 90 °C, 90 min) pre-treatment.

The TEA was carried out in two phases. In the first, the minimum size of the WWTP capable of making the costs necessary for the implementation of the biogas upgrading plant equal to the revenues coming from selling biomethane (at 62 €/MWh) in 10 years was calculated in the absence of pre-treatments. It resulted of 500,000 equivalent inhabitants (e.i.). In the second phase, for the WWTP size found previously, the effect of either biological or thermo-alkali pre-treatments on the economic balance was evaluated, that is the gain (or the loss) associated to the selling of biomethane, compared to the reference price of 62 €/MWh. It was found that the TPAD increased the biogas productivity by only 23.6%, too little to compensate the amount of heat necessary for the pre-treatment and the purchase cost of the additional reactor. Conversely, the thermo-alkali pre-treatment, which enhanced the WAS biogas productivity by 110%, increased the biomethane revenues by approx. 10 €/MWh, compared to the scenario without pre-treatments. This study offers useful data to WWTP managers who want to introduce WAS pre-treatments, combined with interventions for biogas upgrading, in a new or existing sludge line of a WWTP.

1. Introduction

Anaerobic digestion (AD) is largely used to stabilize sewage sludge (SS) and recover energy in the form of biogas or biomethane from it (Arias et al., 2021; Capodaglio and Callegari, 2023). The annual generation of SS from wastewater treatment plants (WWTPs) in Italy amounts to $3.2{\cdot}10^6$ t on a wet basis (ISPRA Report, 2022), corresponding to a per-capita production of approx. 10 kg dry solid (d.s.)/p.c. per year (Campo et al., 2021), in line with the values found in other European countries (Bianchini et al., 2016; Gianico et al., 2021). The above-mentioned amount of SS, which includes primary (PS) and secondary sludge (or waste activated sludge, WAS), if adequately valorized through AD, could provide approx. 0.5–0.7% of the national demand of methane. Methane from renewable sources plays a crucial role in the decarbonization of energy sources. The biomethane from the so-called "biogas road" (that is obtained from the biogas from AD) has a Technology Readiness Level that already reached a value equivalent to the market availability (Ardolino et al., 2021). Biomethane is a fully substitutive of natural gas of fossil origin and can be used as energy carrier or transportation fuel. Furthermore, it was recently stated (January

* Corresponding author.
E-mail addresses: giuseppe.campo@polito.it (G. Campo), alberto.cerutti@polito.it (A. Cerutti), mariachiara.zanetti@polito.it (M. Zanetti), barbara.ruffino@polito.it (B. Ruffino).

https://doi.org/10.1016/j.jenvman.2024.122780
Received 24 May 2024; Received in revised form 11 September 2024; Accepted 29 September 2024
Available online 12 October 2024
0301-4797/© 2024 The Authors. Published by Elsevier Ltd. This is an open access article under the CC BY-NC-ND license (http://creativecommons.org/licenses/by-nc-nd/4.0/).

2024) that all WWTPs, with a treatment capacity superior to 10,000 population equivalent (p.e.), must adopt the most suitable technologies and processes to achieve energy neutrality at a national level by 2045, in compliance with the European Green Deal requirements (European Parliament, 2024). In this framework, the application of strategies to increase the biogas productivity of SS is of capital importance.

PS has a good biological degradability, but WAS has an inferior degradability because of its peculiar origin and composition. In fact, WAS organic matter can be found mostly within microbial cells and organized in a network of extracellular polymeric substances, which limits its availability to AD (Liu et al., 2022; Chen et al., 2023). Consequently, highly efficient and environmentally friendly pre-treatment methods (mechanical, thermal, chemical, biological or a combination thereof) have been developed to accelerate WAS hydrolysis, making AD of such a substrate more productive in shorter times (Mitraka et al., 2022). Some pre-treatment techniques, such as thermal and chemical, have received a broad attention in recent years, whilst others, such as biological, have been less investigated (Mitraka et al., 2024; Zhou et al., 2024).

The peculiarity of biological hydrolysis (BH) is to divide the phases of AD into two reactors, namely acidogenic (AR) and methanogenic (MR) reactor, so as to offer ideal conditions for microorganisms (Tang et al., 2023). In fact, acid- and methane-forming microorganisms are quite different in terms of physiology, nutritional needs, growth kinetics and sensitivity to environmental conditions (Yang et al., 2023). A two-stage AD is a quite old concept, which was elaborated at the beginning of the twentieth century with the aim of obtaining the hydrolysis of suspended solids before entering the main biological reactor in the wastewater treatment train (Qin et al., 2017). More recently, the concept got evolved and started being used to digest substrates in two stages, where, because of phase separation, volatile fatty acids (VFAs) are produced in the first stage, while the conversion of VFAs to biogas takes place in the second stage. Quite often, the two reactors work at a different temperature, for that reason, this process is also known as temperature-phased anaerobic digestion (TPAD, Qin et al., 2017). Temperature and HRT of the AR have been identified as the most critical parameters which dictate sludge solubilization, production of VFAs, microbial community structure and quality of the digestate (Yu et al., 2013; Hameed et al., 2019). There is now a good consensus that a 55 °C BH followed by a mesophilic digestion (35 °C–42 °C) is the optimal temperature combination in terms of methane yield (Wang et al., 2022), while the AR HRT is generally set at 3–5 days. Mehari and Chang (2022) demonstrated that AR HRT could be shortened by using a fraction of treated sludge mixed with untreated sludge.

The most recent studies tested TPAD as a possible solution to improve the degradation and biogas productivity of some difficult waste products, such as, for example, greasy sludge coming from the canned tuna industry (Sani et al., 2022a) or waste cooking oil (Yan et al., 2021). The above-mentioned substrates were digested together with WAS or SS, respectively, in order to guarantee an appropriate nutrient balance. Other mixtures of substrates were on-purposely prepared to produce synergistic effects in TPAD systems, as in Lovato et al. (2020), who blended glycerin with whey to boost the buffering capacity of the system. Most of the studies that are currently available in the literature have found average increases in biogas yield of up to 30%, when employing a two-stage system as opposed to a single-stage system (Rajendran et al., 2020; Sillero et al., 2024).

The above-mentioned figure, concerning the increase in biogas productivity, alone is, however, insufficient to prove the technical and financial viability of BH. Information on that is still lacking in the current literature, particularly if BH was applied as a pre-treatment of pure WAS in a comprehensive, full-scale train for SS valorization, as that which can be found in a real WWTP. The said treatment train included AD and the subsequent upgrading of the generated biogas to biomethane, to be used as a natural gas substitute. In this framework, two aspects must be carefully considered: (i) single-stage systems might be energetically more favorable than two-stage systems, due to the increased energy demand of the latter process; (ii) it could be a trade-off in terms of excess energy produced vs. the cost of placing a second digester.

Techno-economic assessments (TEAs) of two-stage AD are rare in the literature, and the relating findings are sometimes inconsistent. That makes to give an unambiguous feedback on the financial viability of biological (or other kinds of) pre-treatments applied to WAS difficult, especially when the WWTP includes a section for biogas upgrading. For example, Lovato et al. (2020) demonstrated that, for a mixture of whey and glycerin, a single-stage system could reach a higher energetic yield than a two-stage system (12.0 vs. 7.0 MJ/kg COD removed). Sillero et al. (2023) found that a TPAD system digesting a mixture of SS, wine vinasse and poultry manure produced 47% and 23% more methane than a single-stage thermophilic or mesophilic system, respectively. They supplemented their study with a profitability analysis, which revealed that the TPAD process presented the highest net present value (5,090, 111 USD) and the lowest payback period (PBP, 4.24 years) among the analyzed scenarios. A similar finding was obtained by Sani et al. (2022b), who demonstrated that the TPAD of a mixture of WAS and greasy sludge was economically feasible, by calculating economic parameters such as the net present value (NPV), the internal rate of return (IRR) and the PBP. Conversely, Rajendran et al. (2020) found a 3% CAPEX excess in comparing a single and two-stage digester, thus concluding that performing BH was not an economically attractive option.

Commercial upscaling of TPAD for the BH of WAS in full-scale WWTPs requires high investments and, consequently, a clear feedback regarding the financial success of the intervention. In this sense, this paper wants to contribute to fill the lack of information existing in the literature and provide useful data to WWTP managers who want to introduce WAS pre-treatments, in the form of BH, combined with components for biogas upgrading, in a new or existing sludge line of a WWTP.

A comparative TEA, which was carried out in two phases, was used for this purpose. At first, the minimum size of the WWTP capable of making the costs necessary for the implementation of the biogas upgrading plant equal to the revenues coming from selling biomethane in 10 years, in absence of application of pre-treatments, was calculated. The price of biomethane was fixed at 62 €/MWh, in agreement with the in-force Italian Decree on biomethane, January 13, 2023, n.23. In the second phase, for the WWTP size found previously, the effect of either biological or more traditional thermo-alkali pre-treatments on the economic balance was evaluated, that is the gain (or the loss) associated to the selling of biomethane, in relation to the reference price of 62 €/MWh. The TEA was supported by the results of pilot-scale tests which provided the values of production of biomethane from raw or pre-treated WAS. To the best of our knowledge, this paper is one of the rare examples of a comprehensive TEA applied to a plant for upgrading biogas to biomethane, after the use of BH for the pre-treatment of WAS as a single substrate prior to AD.

2. Materials and methods

2.1. Substrate and inoculum

All tests performed in this study employed the WAS obtained from the outlet of the gravity pre-thickeners in the availability of the Castiglione Torinese WWTP (located 20 km far from Turin, NW Italy). The Società Metropolitana Acque Torino (SMAT S.p.A.) operates this WWTP, which is the largest WWTP in Italy, with a treatment capacity of approx. 2 million p.e. Details of the water and sludge line of the Castiglione Torinese WWTP were provided in a previous paper (Borzooei et al., 2020). Shortly, the WWTP has a standard configuration that includes the following treatment phases: preliminary treatments (screening and sand/oil removal), primary settling, pre-denitrification, biological oxidation, secondary settling and final filtration on a dual media, sand –

anthracite, bed.

The WAS was collected and characterized once a week, and stored in a refrigerator at 4 °C until use. The WAS had an average TS content of 3.43 ± 0.65% and a VS/TS ratio of 0.741 ± 0.036, higher than that observed in the same substrate used in a previous study (Campo et al., 2023a), probably because the biological oxidation section had been operating with a shorter solid retention time (SRT). The inoculum used for the start-up of the digesters was obtained from the digesters of the same WWTP.

2.2. Reactor set-up and experimental tests

The study made use of three pilot-scale tests to obtain reliable values of biomethane productivity from the WAS to be used in the TEA (see Section 2.5). The tests compared the performance of biological and thermo-alkali pre-treatments to a reference system, that did not use pre-treatments. All digestion tests were carried out in the mesophilic range (37–38 °C) and in a semi-continuous mode, meaning that the digesters were fed and discharged once a day, five days a week.

Test n.1 was the control test. The WAS was digested in a reactor with a total volume of 300 L (working volume, 240 L), equipped with an 80 L gasometer and an electronic system for on-line monitoring of the biogas volume and composition. A detailed description of the system is provided in Fiore et al. (2016). The test had an HRT of 20 days with an OLR of 1.27 ± 0.28 kg VS/d·m^3, as shown in Fig. 1, and lasted approx. 110 days.

In test n.2 the WAS received the biological pre-treatment in a 12-L (working volume, 9 L) continuous stirred reactor (CSR), which was operated at 55 °C with an HRT of 3 days. The digestion of the pre-treated WAS was carried out in a similar reactor (CSR, working volume 10 L), with an HRT of 20 days. The OLR of the first reactor (namely the AR) was maintained at values of around 9–10 kg VS/m^3·d (specifically, 9.86 ± 3.43 kg VS/m^3·d), as it can be seen from Fig. S1 (Supplementary Materials). Anomalies in the fed amount could be observed before the weekend, when the digester received a double dose of the substrate and the fed volume was increased from 3 to 6 L. The OLR in the second reactor (namely the MR) was at approx. 1 kg VS/m^3·d (0.98 ± 0.19 kg VS/m^3·d, Fig. S1). Test n.2 lasted approx. 110 days.

Test n.3 involved the digestion of the WAS after a thermo-alkali pre-treatment. The operating conditions for the thermo-alkali pre-treatment, that is 4 g NaOH/100 g TS, 90 °C, 90 min, were fixed following the results of a previous work (Ruffino et al., 2016). The batch reactor used for the WAS pre-treatment had a working volume of 35 L and was completely stirred with an electric propelled shaker. The heat was transferred to the sludge through three electrical band resistances, placed on the lateral surface of the reactor, with an electric power of 2.6 kW each. The temperature inside the reactor was controlled by an open-source single-board microcontroller (Arduino). The digestion test of the thermo-alkali pre-treated WAS was carried out in the same reactor of test n.1. It lasted 90 days, with an HRT of 20 days and an OLR of 0.56 ± 0.15 kg VS/m^3·d. Details of test n.3 are provided in a previous paper (Campo et al., 2023a).

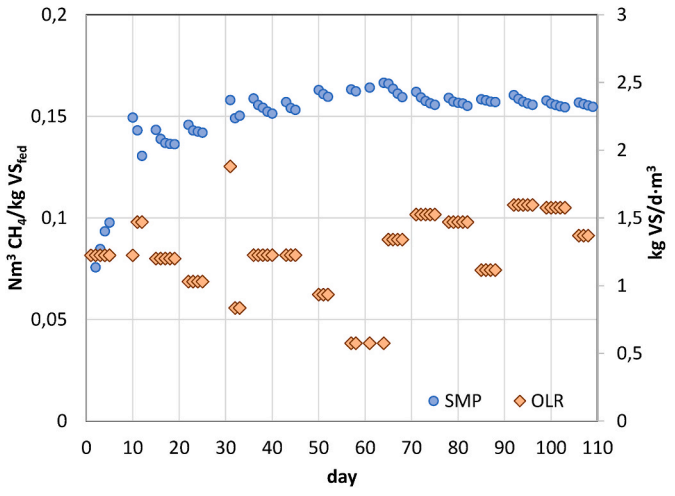

Fig. 1. Specific methane production (SMP, left axis) and organic loading rate (OLR, right axis) of the one-stage mesophilic reactor (test n.1).

2.3. Analytical methods

TS, VS and pH were determined according to the Standard Methods (APHA, AWWA, WEF, 2012).

The ratio between total VFAs (tVFAs, expressed in equivalent milligrams of acetic acid, CH_3COOH per liter) and total alkalinity (TA, expressed in equivalent milligrams of calcium carbonate, $CaCO_3$ per liter), known as FOS/TAC ratio in the German technical literature, was obtained by a potentiometric titration. The analysis was conducted according to the Nordmann method, by using a SI Analytics automatic titrator. Specifically, a sample of 20 mL of digestate is titrated by 0.1 N of sulfuric acid solution (H_2SO_4) up to pH 5.0 to calculate the TA value. Subsequently, the VFA value is obtained after a second titration between pH 5.0 and pH 4.4.

Soluble COD, sCOD, is the fraction of COD separated after an initial centrifugation at 15,000 rpm for 10 min and a subsequent filtration of the supernatant on a 0.45 μm nylon membrane filter, as recommended by Roeleveld and van Loosdrecht (2002). The sCOD was determined with an analytical kit and a dedicated sprectrophotometer (Lovibond). The elemental composition analysis of the WAS was obtained with a Flash 2000 ThermoFisher Scientific CHNS analyzer on samples dried at 105 °C and on the residual ashes after combustion at 600 °C.

Spectroquant ammonium test 0.010–3.00 mg/L Merck kits were used for estimating ammonia nitrogen concentration in the digestate samples after filtration on a 0.45 μm nylon membrane filter. The detection was carried out as per the manufacturer's instruction using an UV-31 Scan Onda spectrophotometer.

2.4. Calculations

The capacity of both biological and thermo-alkali pre-treatments to determine COD solubilization was quantified by using the COD solubilization ratio (Sarwar et al., 2018), which was calculated as in Equation 1

$$COD\ solubilization\ ratio = \frac{(sCOD_f - sCOD_i)}{tCOD_i - sCOD_i} \quad (1)$$

where $sCOD_f$ and $sCOD_i$ were the concentrations of soluble COD after and before the pre-treatment respectively, and $tCOD_i$ was the concentration of the total COD before the pre-treatment. For instance, the difference between $tCOD_i$ and $sCOD_i$, before the pre-treatment, was the concentration of particulate COD ($pCOD_i$).

Because of the peculiarity of the biological pre-treatment, in which most of the solubilized COD is made available for the reactions occurring in the MR, but a small amount of it is converted to methane already in the AR, the capacity of the hydrolytic/fermentative process in COD solubilization was also quantified by means of a parameter named extent of solubilization (Ge et al., 2011; Ruffino et al., 2020).

The extent of solubilization was calculated as in Equation 2

$$Extent\ of\ solubilization = \frac{COD_{CH4} + sCOD_f - sCOD_i}{tCOD_i - sCOD_i} \quad (2)$$

where COD_{CH4} was the methane production as mg COD from the AR; the other terms of the equation (namely $sCOD_f$, $sCOD_i$ and $tCOD_i$) have been already described (see Equation (1)).

2.5. Techno-economic assessment

The TEA was carried out with two aims. First (Phase 1), determining the WWTP's treatment capacity for which the fixed and operational costs of either a new entire sludge line or only the components necessary for converting biogas to biomethane equaled the revenues from selling the biomethane at the price of 62 €/MWh, that is the incentive fixed by the Italian Decree on biomethane, January 13, 2023, n.23. In this base scenario (Scenario 0) the two sludges (PS and WAS) generated in the WWTP were digested as they are in a traditional, one-stage mesophilic reactor (see Fig. 2). Second (Phase 2), calculating the extra-revenues coming from the extra-amount of biomethane obtained after the application of either biological (Scenario 1) or thermo-alkali pre-treatments (Scenario 2) to the WAS in a WWTP with the treatment capacity obtained in Phase 1. It was hypothesized that the two kinds of pre-treatments were operated under the conditions tested in Section 2.2 and the specific methane production (SMP) was that obtained from the tests.

As Fig. 2 shows, the section of biogas management and upgrading included (i) a gasometer for temporary storage of the biogas, (ii) a boiler for the production of the heat necessary to support the AD process, (iii) an absorption tower with demister for the removal of H_2S and water, (iv) a double-stage membrane plant for CO_2 separation and (v) a regenerative oxidizer to burn the methane contained into the first-stage

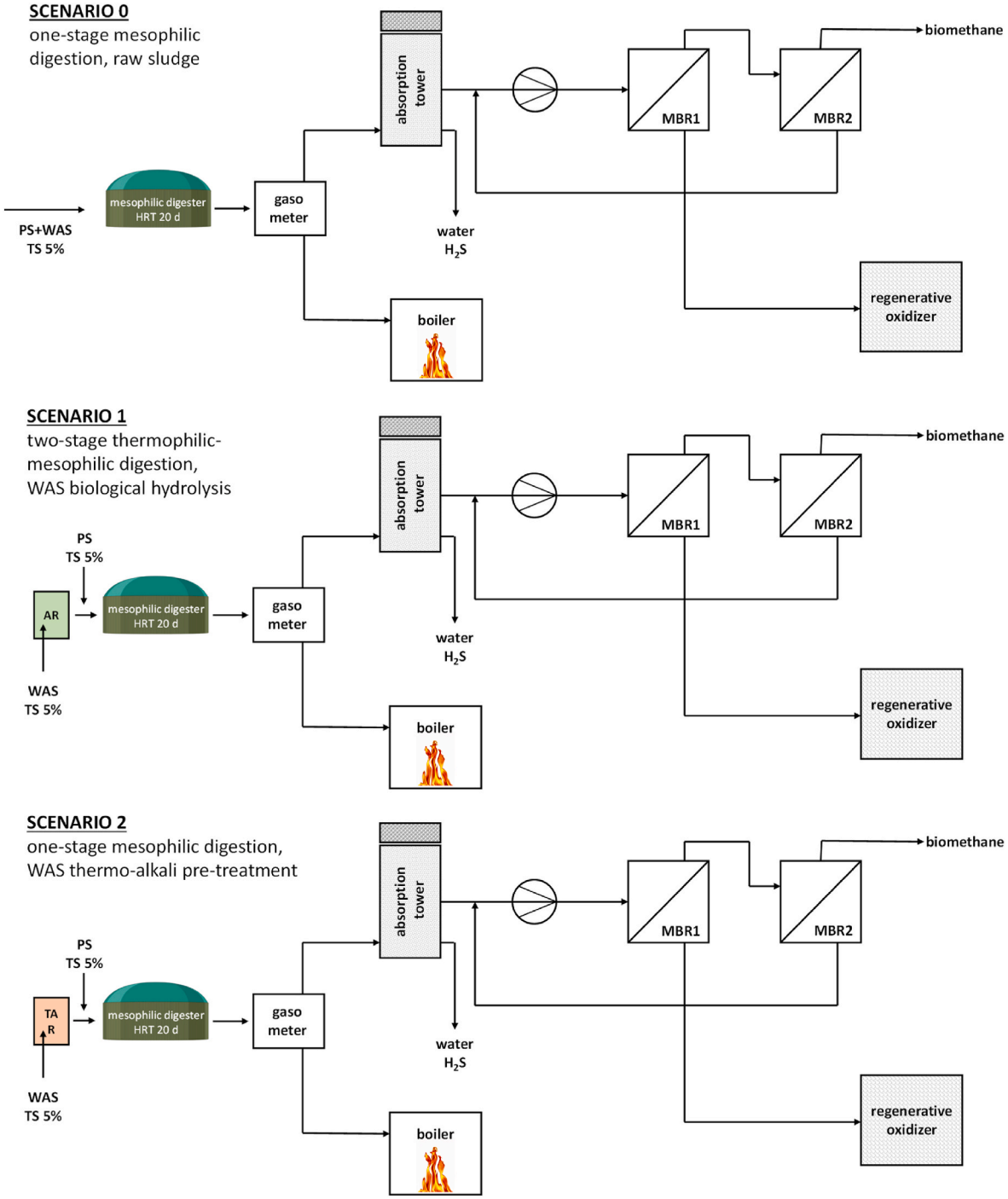

Fig. 2. Scheme of the three scenarios for pre-treatment (where applicable), anaerobic digestion, depollution and upgrading of the biogas.

permeate. According to this scheme, the biogas produced from the AD was split into two aliquots: (i) one was burned in the boiler, to obtain the heat necessary for the pre-treatment and/or the AD process; (ii) the other was subjected to the processes of depollution and upgrading, to produce biomethane to be used as a natural gas substitute. The technical assessment included the heat balance, related to the thermal sustainability of the entire AD process, and the design of the key components required for AD and biogas depollution and upgrading, which are illustrated in Fig. 2.

For the TEA, the specific production of SS, that included PS and WAS, was fixed at 10 kg d.s./p.c.•y, the value obtained in a survey carried out in 2020 (Campo et al., 2021), which was demonstrated to be in line with the values found in European WWTPs (Bianchini et al., 2016; Gianico et al., 2021). The partition between PS and WAS was hypothesized to be 65:35 (as d.s.) and the VS/TS ratios 0.75 and 0.70 for PS and WAS respectively, that is the average values observed in the Castiglione Torinese WWTP (Campo et al., 2023a). The SMP values of the two sludges were fixed at 0.280 Nm^3/kg VS added for PS (as in Campo et al., 2023a) and 0.158 Nm^3/kg VS added for raw WAS (this study).

Regarding the execution of the heat balance related to the thermal sustainability of the AD process, both positive and negative items were considered. The positive items included (i) the heat produced by burning the biogas in a boiler ($\eta = 95\%$) and (ii) the heat recovered by mixing the WAS coming from the pre-treatments (with an outlet temperature of 55 °C or 90 °C, depending on the type of applied pre-treatment) with the raw PS at ambient temperature. The efficiency of heat transfer between hot and cold sludge was supposed to be 50% in the case of the biological pre-treatment, and 80% in the case of thermo-alkali-pretreatment, depending of the temperature gap. The negative items included (i) the heat necessary to heat the sludge entering the AD process (Scenario 0) or the pre-treatment reactor (Scenario 1 and Scenario 2), and (ii) the heat necessary to compensate the heat losses through the walls and the roof of the digesters. The heat transfer coefficient (U) was assumed 0.8 W/m^2·°C and the surface area of the AD reactor walls was calculated from the digester working volume incremented by 20%, considering a radius to height ratio of 1:1, as in Passos and Ferrer (2015).

To ensure that the biogas depollution section could handle even peaks of biogas output, a safety factor of 1.5 was applied for its design. Removal of water and H_2S was obtained with an absorption tower and a condensation unit, as in Campo et al. (2023b). Upgrading biogas to biomethane was obtained with a membrane plant with a double-stage permeation, with second-stage permeate recycling and single-stage compression, as in Valenti et al. (2016). Membrane material was cellulose acetate, while module was spiral-wound. The surface of the membrane was calculated by considering a specific area of 1.2 m^2 h/Nm^3 biomethane as in Valenti et al. (2016) for double-stage permeation with second-stage permeate recycling. The purity of the recovered biomethane was set at 97% v/v. Because it was not possible to recover 100% methane, the methane contained into the first-stage permeate was burned into a regenerative oxidizer. The size of the compressor necessary to feed the membrane plant was calculated as in Equation (3), by considering an outlet pressure of 25 kPa and an efficiency of 75%.

$$P = \frac{k \bullet Z \bullet RT}{k-1}\left[\left(\frac{P_2}{P_1}\right)^{\frac{k-1}{k}} - 1\right] Q_m \quad (3)$$

k, gas isoentropic coefficient, 1.3 for biogas
Z, gas compressibility factor, 1
R, gas constant, 8.314/MW, MW, molecular weight
T, gas temperature, 303 K
P_1, pressure inlet compressor, 1 kPa
P_2, pressure outlet compressor, 25 kPa
Q_m, compressor throughput, kg/s

The economic analysis was carried out by using the Discounted Cash Flow (DCF) method, which is based on three variables: (i) opportunity cost of capital, (ii) lifetime of the project and (ii) cash inflows (It) and outflows (Ot) (Ferella et al., 2019). The first variable measures the return coming from an alternative similar project that has the same risk level and it was assumed equal to 6%. The second variable is a function of the nature of the project and it was set equal to 10 years. Cash inflows and outflows are related to the selling price of biomethane and the expenses required to put up the process (energy necessary for the pieces of equipment and components, sodium hydroxide for the thermo-alkali pre-treatment), respectively. Cash inflows and outflows actualized over the lifetime of the project must compensate the initial investment, reported in Equation (4) as the Net Present Value (NPV) of the project.

$$NPV = \sum_{t=0}^{n} \frac{(I_t - O_t)}{(1+i)^t} \quad (4)$$

Table 1 lists all the plant's components along with the cost function that was used to determine each one's pricing and actualized using the exchange ratio (ER). ER values reported in Table 1 were calculated as the ratio between the present (June 2023) chemical engineering plant cost index (CEPCI, 803.3) and the CEPCI at the reference year (Maxwell, 2020). In order to incorporate indirect expenses (such as design, engineering, and construction), as well as costs associated with electrical facilities and installation, in the total investment costs (TIC), the overall costs of the equipment were increased by 25%.

The energy demand of the digesters, boiler and regenerative oxidizer was calculated by multiplying their specific electricity consumption, that is per unit of equivalent inhabitant (e.i.), obtained from Campo et al. (2023b), for the number of e.i. of the WWTP. The operating cost of the membrane was fixed to 30 €/m^2·y, as in Valenti et al. (2016). For Scenario 2, which includes the thermo-alkali pre-treatment, the purchase cost of sodium hydroxide was fixed equal to 0.30 €/kg (Price Index, 2024).

3. Results and discussion

3.1. Effects of the pre-treatments on COD solubilization

This section describes the capacity of pre-treatments (biological, thermo-alkali) to solubilize COD in the WAS. The concentration of sCOD in the raw substrate, which was directly fed to the digester of test n.1, was of very limited extent, ranging approximately from 50 to 150 mg/L. That corresponded to a virtual COD solubilization ratio of only 0.2–0.4%, as shown in Fig. S2. Those values were calculated by imposing the $sCOD_i$ equal to zero and the $sCOD_f$ equal to the concentrations of sCOD found in the raw samples. The value of tCOD was obtained from the results of the elemental analysis of the WAS, which provided a tCOD/VS ratio equal to 1.3 g tCOD/g VS.

The concentration of sCOD in the biologically treated WAS, coming out from the AR of test n.2, was quite variable, with an average value of 5350 (±1550) mg/L. That determined an observed COD solubilization ratio, due to the BH, of 15.4 ± 4.4%, as shown in Fig. 3a. The solubilization capacity of the biological pre-treatment increased to 22.6% (±4.6%), if the contribution of the sCOD to the methane generation was included, as in the calculation of the extent of solubilization. However, the balance between the sCOD remaining in the WAS after pre-treatment and the methane-equivalent COD in the biogas generated in the AR, demonstrated that amounts of sCOD from 20% to 50% were transformed into methane. That occurrence highlighted that the status of phase separation between the two reactors was not completely achieved. In fact, the SMP observed in this study at steady state (see Section 3.2), that is after 70 days of operation, was of 0.033 (±0.001) Nm^3/kg VS added, approx. three times higher than the value observed in the same apparatus performing biological pre-treatments onto PS at the same operating conditions (Ruffino et al., 2020). However, the amount of sCOD consumed in the generation of methane observed in this study was in

Table 1
List of the components of the plant and tools used for plant cost evaluation.

Component	Cost function ($)	Capacity unit	Year	CEPCI	ER	Reference
Pre-treatment tank	$575622 \bullet \left(\frac{V_{PT}}{3000}\right)^{0.8}$	m^3	2016	541.7	1.48	Mirmasoumi et al. (2018)
Main digester	$840222 \bullet \left(\frac{V_{AD}}{3000}\right)^{0.8}$	m^3	2016	541.7	1.48	Mirmasoumi et al. (2018)
AR digester	$840222 \bullet \left(\frac{V_{AR}}{3000}\right)^{0.8}$	m^3	2016	541.7	1.48	Mirmasoumi et al. (2018)
Boiler for heat generation	$\frac{1}{1.12} \bullet 180 \bullet P_{boiler}$	kW	2012	584.6	1.37	Petrollese and Cocco (2020)
Gasometer	$\frac{1}{1.12} \bullet 40 \bullet V_{gasometer}$	m^3	2012	584.6	1.37	Sanaye and Yazdani (2022)
Absorption tower for H_2S removal	$\frac{1}{1.12} \bullet 15974.13 \bullet \left(Q_{biogas}{}^{0.3555}\right)$	m^3/h	2011	585.7	1.37	Sanaye and Yazdani (2022)
Demister	$0.01 \bullet cost\ desulfurization$	$	2011	585.7	1.37	Sanaye and Yazdani (2022)
Regenerative oxidizer	$2.664 \bullet 10^5 + 13.98 \bullet Q_{biogas}$	scfm	1999	390.6	2.06	Sorrels (2017)
Membrane	165 A	m^2	2015	556.8	1.44	Valenti et al. (2016)
Compressor	1000 P	kW	2015	556.8	1.44	Valenti et al. (2016)

(scfm, standard cubic foot per minute, 1 scfm = 1.699 m^3/h).

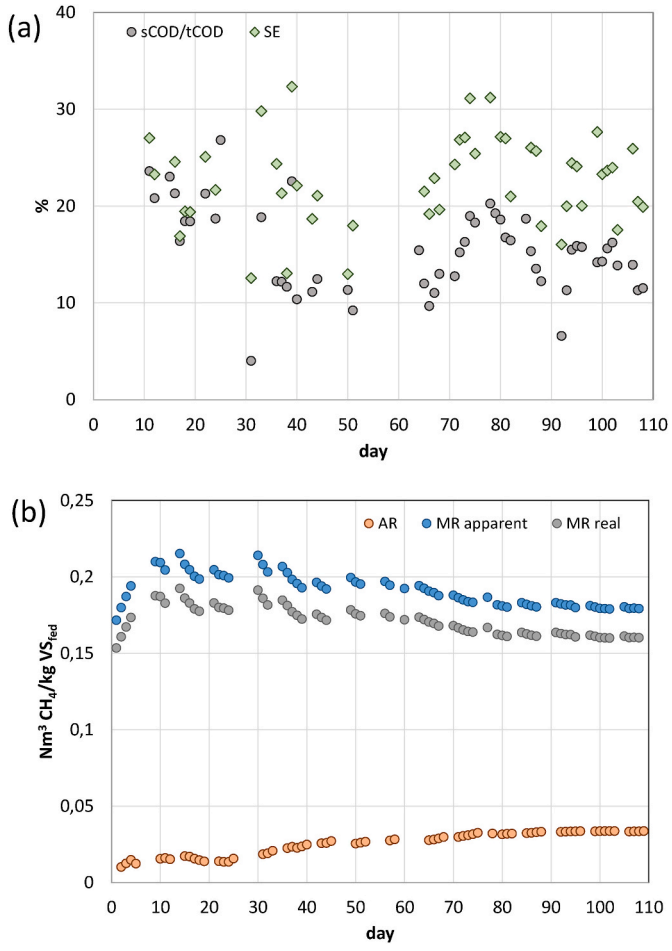

Fig. 3. (a) Trend of the COD solubilization ratio (sCOD/tCOD) and solubilization extent (SE) due to the BH and (b) specific methane production in the AR, MR (apparent MR) and MR considering the VS consumed in the AR (real MR).

line with the value, in the order of 40%, found by Ge et al. (2011) in a similar test involving WAS (2-day biological pre-treatment, 50 °C).

Not surprisingly, the thermo-chemical pre-treatment (4 g NaOH/100 g TS, 90 °C, 90 min) had a very positive effect on the solubilization of the COD in the substrate fed to the digester of test n. 3. The sCOD content in the thickened WAS samples (2.5% VS b.w.) increased from approx. 100 mg/L, in the raw substrate, to values in the 10,000–15,000 mg/L range, in the treated WAS. The observed COD solubilization ratio was consequently in the order of 40% (data not shown), approx. three times higher than that obtained with the biological pre-treatment. It was of the same extent of the values found in the tests carried out at a smaller scale on WAS samples coming from the same WWTP (Ruffino et al., 2016).

3.2. Process stability, VS reduction and methane production

The digestion test used as a control (test n.1, T = 38 °C, HRT = 20 days, untreated WAS), after a phase of start-up, which lasted approx. 30 days, has run steadily. For the whole duration of the test the FOS/TAC value was at nearly constant values, in the range of 0.1–0.2 (average 0.15), indicating a stable AD process (data not shown). Monitoring of the ratio between tVFAs and TA (FOS/TAC ratio) is a field-available method to measure the risk of acidification of the digester in a quick and reliable way and can help maintaining the operational stability of the process (Pfeiffer et al., 2020). The observed tVFAs/TA ratio was in the expected range for digestion processes involving SS (Kwon et al., 2023). The concentration of ammonia nitrogen in the liquid phase of the digestate was at the constant value of approx. 1000 mg/L for all the duration of the test (Fig. S3) and did not determine evident phenomena of inhibition.

The digestion process developed in test n.1 reached a SMP of 0.158 ± 0.004 Nm^3/kg VS after around 3 HRTs. Such a value was steadily maintained until the end of the test, as shown in Fig. 1. The VS content was used as an indicator of the amount of organic matter contained into the sludge. The values of the daily monitored VS content in the fed substrate and in the digestate are shown in Fig. S2. The balance between them reveals that the digestion process was capable of reducing the VS content of the WAS by 34%.

The time course of the ratio between tVFAs and TA in the AR and MR of test n.2 is shown in Fig. S4. It can be seen that the FOS/TAC ratio in the AR was quite variable, from 0.5 to 1.5, with tVFAs concentrations which were approx. four times more than the values found in the MR (average values of 2750 mg equivalent acetic acid/L vs. 670 mg equivalent acetic acid/L, data not shown). The biological pre-treatment carried out in the AR converts biodegradable COD to VFAs through the processes of hydrolysis and fermentation (Ge et al., 2011). The products of hydrolysis are typically sugars, long chain fatty acids and amino acids, which are subsequently transformed into VFAs and CO_2 through fermentation. FOS/TAC values with a similar extent and trend were observed in the study of Sani et al., 2022b, where in the second phase of the test the AR was fed with a mixture of concentrated WAS (TS approx.

3%) and greasy sludge coming from a canned tuna industry. Notwithstanding the variable trend of the FOS/TAC ratio, the digestion process in the AR was characterized by a stable operation for all the duration of the test. In the MR the FOS/TAC ratio stabilized at a quite constant ratio of 0.17, indicating a stable AD process. The MR could be fed with pre-treated, acidic substrate without showing signs of inhibition. The trend of the concentration of ammonia nitrogen in the liquid phase of the digestate coming from the AR and MR is reported in Fig. S3. It was, on average, approx. of the same order (1300 mg/L) in the two digesters, with a slightly rising trend in the MR.

The production of methane in the AR increased from approx. 0.015 Nm^3/kg VS added, in the first 30 days of the test, to the stable value of 0.033 ± 0.001 Nm^3/kg VS added, in the last 30 days, as shown in Fig. 3b. To this SMP corresponded a VS consumption in the order of 10%, associated to both the CO_2 generated in the fermentation process and the production of methane which occurred in the AR, as discussed in Section 3.1. The SMP of the main digester (MR), after 70 days of operation, was relatively stable at the value of 0.182 Nm^3/kg VS added (Fig. 3b). This SMP values has to be considered as an "apparent" value, because a portion equal to approx. 10% of the VS introduced in the digestion apparatus (including the two reactors) was already consumed in the AR. Consequently, the effective methane yield of the MR, referred to the initial organic matter content of the substrate production, had to be corrected in 0.163 Nm^3/kg VS added (see Fig. 3b, MR real), according to Equation 5

$$B' = B_0(1-\rho) \quad (5)$$

where B′ is the overall methane yield ($NLCH_4$/kg VS added), B_0 is the methane yield of the sludge after the pre-fermentation ($NLCH_4$/kg VS added), and ρ is the VS consumption from the first to the second reactor (g VS final/g VS initial), as in Peces et al. (2016). In the case in which it was possible to recover also the methane produced in the first stage, the overall methane yield would be equal to 0.196 Nm^3/kg VS added, that is only 24% more than the value observed in test n.1 (control). That increase was comparable to the value obtained by Sillero et al. (2023), who observed an increase in the methane production of 30% between a mesophilic reactor (HRT = 15 days) and a TPAD both digesting a mixture made of SS, wine vinasse and poultry manure.

The VS at the outlet of the MR had also a steady concentration, thus demonstrating that the process had been correctly operated and the digester was well mixed. The observed VS reduction in the MR was in the order of 39%, in line with the observed production of biogas. Both SMP and VS reduction observed at the pilot-scale TPAD used in this study were in line with the values found by Zhao et al. (2022), who monitored a full-scale plant operating according to a TSBP (Temperature Staging and Biological Phasing) technology, that is a TPAD with a reduced temperature (45 °C) in the thermophilic phase, for over one year.

As reported in Section 3.1, the thermo-chemical pre-treatment (4 g NaOH/100 g TS, 90 °C, 90 min) had a positive effect, first, on the amount of soluble COD in the substrate fed to the digester and, consequently, on the productivity of the AD process. The pH of the WAS after the pre-treatment was in the order of 8.5. The SMP observed in test n.3 was of 0.332 Nm^3/kg VS, approx. 110% more than the control (test n.1). The VS reduction was close to 70%. However, a steady development of the process was possible only working with an OLR of 0.56 ± 0.15 kg VS/m^3·d, which was approximately one half of the value used for test n.1. That was because the thermo-alkali pre-treatment determined the release of ammonia (NH_3-N), other than of soluble COD, as extensively discussed in a previous paper (Campo et al., 2023b). Ammonia progressively accumulated into the reactor and inhibited the methanogens, thus determining a reduction in the methane production and an evident accumulation of acidic compounds (Astals et al., 2018).

3.3. Techno-economic assessment

3.3.1. Phase 1 – WWTP size assessment with no pre-treatment application

In the first part of Phase 1 of the TEA, preliminary calculations were carried out to evaluate the economic sustainability of building a new sludge line, that included the AD section and all the components necessary for biogas upgrading. Calculations were carried out with reference to a WWTP with two different treatment capacities, that is 100,000 e.i. and 1M e.i. A detail of the cost items found for the two cases is reported in Table 2.

The overall purchase cost, which included the main digester and the pieces of equipment necessary to thermally support the AD process and to upgrade the biogas to biomethane, was of 1.2 M€ and 4.9 M€ for the WWTP sizes of 100,000 e.i. and 1M e.i., respectively. Table 2 shows that the digester (or group of digesters) and the regenerative oxidizer, which is required for the destruction of the first-stage permeate, accounted for the majority of the total equipment purchase cost. Specifically, the sludge line of the 100,000 e.i. WWTP required a digestion volume of 1370 m^3, which produced 738.5 Nm^3/d of biogas, of which 37.5% was necessary to support the AD process and the remaining 62.5% could be upgraded to biomethane. The required digester had a corresponding cost of approx. 600 k€ (Table 2). The thermal oxidizer had a cost of the same order, that is around 500 k€. The digester and the thermal oxidizer accounted for 50% and 42% respectively of the overall equipment purchase cost.

For a WWTP with a capacity of 1M e.i., the volume of the digester was ten times more, with a corresponding cost of approx. 3.8 M€. In this case, the amount of biogas which could be upgraded to biomethane was 65.3%, only 4.5% more than in the previous case. The increase in the WWTP size minimally affected the cost of the thermal oxidizer, that remained at 500 k€. In the overall, the cost of the pieces of equipment necessary for the sludge line of a 1M e.i. WWTP was of 4.9 M€, being the contribute of the digester in the order of 78%. Anaerobic digesters are a critical item in the economic assessment of the project, as highlighted in previous studies (Tolessa et al., 2022). Sillero et al. (2023) managed to keep the costs of the digester at quite low values (50 k€ for a reactor of approx. 2000 m^3, corresponding to 150,000 e.i. in this study) by using a covered lagoon digester, which, however, was deemed not suitable for the present case.

In order to balance such high costs for digesters, it is necessary to either extend the time horizon of the project (for example to 20 years or more) or to consider a higher selling price for biomethane. With reference to a 1M e.i. WWTP, the adoption of a biomethane selling price of 62 €/MWh could recover only 57% of the initial investment made for the pieces of equipment of the sludge line after 20 years. The initial investment could be recovered after 10 years provided that the biomethane is sold at around 100 €/MWh. However, a more complete evaluation should include other factors, that is, for example, the revenues coming from the fees applied to citizens to benefit of the integrated water service (water supply and wastewater management and treatment).

Table 2
Cost items of the pieces of equipment composing the sludge line for WWTPs with a treatment capacity of 100,000 and 1,000,000 e.i.

Pieces of equipment	WWTP 100,000 e.i. Purchase cost (€)	WWTP 1,000,000 e.i. Purchase cost (€)
Main digester(s)	605,013	3,817,377
Boiler for heat generation	14,992	102,961
Gasometer	10,296	138,631
Absorption tower for H_2S removal	60,990	140,466
Demister	610	1405
Regenerative oxidizer	498,242	499,908
Membrane	11,960	124,992
Compressor	7521	78,600
TPC	1,209,625	4,904,339

On the basis of the results of above, it was decided to limit the TEA to the works necessary to upgrade the flow rate of biogas, which exceeded the part necessary for the thermal support of the AD process, to biomethane. Consequently, the digester(s), the gasometer and the boiler for thermal energy production were excluded from the assessment in Scenario 0. The cost differences of these pieces of equipment with respect to Scenario 0 were however considered for the TEA carried out in Scenario 1 and 2 (see Section 3.3.2).

As shown in Fig. 4, the price of biomethane capable of recovering the initial investment after 10 years at the opportunity cost of capital stated in Section 2.5 (6%) ranged from 220 €/MWh, for a WWTP with a treatment capacity of 50,000 e.i., to 48.5 €/MWh, for a WWTP of 2M e.i. In this range of WWTP sizes, the amount of biogas which could be recovered in the form of biomethane was from 61% to 65%. The break-even point, that is biomethane selling price at 62 €/MWh, was obtained for a WWTP size of approx. 500,000 e.i. (see Fig. 4). The detailed results of the assessment concerning the sizing of the pieces of equipment and cost evaluation are reported in Tables S1 and S2, respectively. They revealed that the weight of the cost of each piece of equipment was quite different considering WWTPs with different sizes (see Fig. 5). For example, the purchase cost of the regenerative thermal oxidizer was almost independent on the size of the WWTP, increasing by less than 1% from 50,000–2M e.i. (see Fig. S5). It accounted for about 90% of the whole purchase cost of equipment in medium-small WWTPs (50,000 e.i.), but it reduced to less than 50% in large WWTPs (2 M e.i.). In general, the weight of the remaining pieces of equipment (namely the absorption tower for H_2S removal, compressor, and membrane) rose with the size of the WWTP. The cost weight of the absorption tower remained consistent at roughly 16% for WWTP treatment capacities of more than 750,000 e.i.

3.3.2. *Phase 2 – effect of the introduction of biological or thermo-alkali pre-treatments*

In Phase 2 of the TEA, for the WWTP size found in Section 3.3.1, that is 500,000 e.i., the effect of the introduction of either biological (Scenario 1) or thermo-alkali (Scenario 2) pre-treatments on the economic balance was evaluated. That means the gain (or the loss) associated to the selling of biomethane, with respect to the reference price of 62 €/MWh. The detailed results of the assessment, that is the biogas and biomethane flows circulating in the plant and the sizing of the pieces of equipment can be seen in Table 3.

The introduction of the biological pre-treatment determined an increase in the biogas production of only 4% compared to the base scenario, due to the increase in the WAS SMP from 0.158 Nm^3/kg VS to 0.196 Nm^3/kg VS. The contribution of the WAS in the methane produced by the digested sludge increased from 22.1%, in Scenario 0 (the complementary amount of methane, that is 77.9% was produced by PS), to 26.0%, in Scenario 1. However, the minimal rise in the biogas production was not able to assure the sustainability of the intervention, that is the introduction of biological pre-treatments. In fact, the biomethane price capable of recovering the initial investment after 10 years increased from 62.4 €/MWh (Scenario 0) to 68.1 €/MWh (Scenario 1). A portion of the increase in biogas production in Scenario 1 was utilized to offset the system's higher heat demand (+11.8% compared to Scenario 0), as a result of the introduction of a process that operated at a temperature (55 °C) above the mesophilic range. The moderate temperature difference between the sludge exiting the AR and the mesophilic conditions of the main reactor allowed a heat exchange between hot and cold (primary) sludge of limited efficiency (50%, as fixed in Section 2.5). The remaining portion of the increase in biogas generation could actually determine a negligible increase in the biomethane production (+1.76% compared to Scenario 0). However, the requirement of an additional reactor, with a volume of 360 m^3, and a small enlargement of both gasometer and boiler, to support the biological pre-treatment, the higher production of biogas and the higher heat demand of the system, was the principal cause of the increase of the break-even biomethane price.

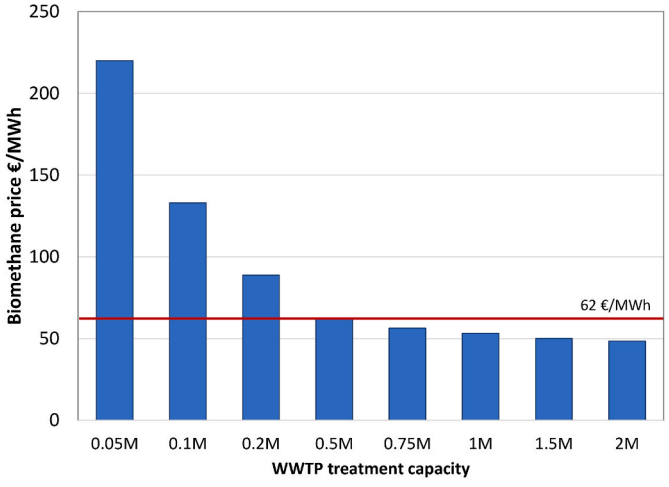

Fig. 4. Price of biomethane capable of recovering the initial investment after 10 years as a function of the WWTP treatment capacity.

The introduction of the thermo-alkali pre-treatment determined an increase in biogas production of 22.8%, which raised from 3693 Nm^3/d in Scenario 0 to 4535 Nm^3/d in Scenario 2 (see Table 3). The contribution of the WAS to the methane production was 37.3% (compared to 26.0% of Scenario 1). The thermo-alkali pre-treatment determined a higher amount of biogas which could be upgraded to biomethane (from 2390 Nm^3/d of Scenario 0 to 3100 Nm^3/d of this Scenario), but also an increase in both investment costs and operating costs. For these reasons, the increase in the profit coming from the selling of biomethane was of approx. 10 €/MWh.

A detail of the cost items for the three scenarios is reported in Table S3. Fig. 6 shows the relative weight of the cost of the pieces of equipment composing the plant for biogas upgrade in the three scenarios. It can be seen from Fig. 6 that, for Scenario 0, the overall cost for equipment purchase was of approx. 710 k€, 70% of which was for the regenerative thermal oxidizer. On the grounds of the hypothesis made before (see Section 3.3.1) no costs for the digester and biogas temporary storage and burning were considered. In Scenario 1 the overall cost for equipment purchase rose to approx. 930 k€ (+31% compared to Scenario 0). The magnitude of the regenerative thermal oxidizer decreased from 70% to 54%, however, more than 22% of the overall purchase cost was due to the first-stage (BH) reactor. Finally, in the case of thermo-alkali pre-treatment application, the overall purchase cost was of approx. 787 k€, 63% of which for the regenerative thermal oxidizer and 10% for the membrane.

4. Conclusions

This study used pilot-scale tests to provide reliable SMP values of raw and either biologically or thermo-alkali pre-treated WAS for a comparative TEA. The TEA was aimed at evaluating the viability of producing biomethane at a WWTP, through upgrading biogas with a double-stage permeation membrane plant.

The results of the TEA demonstrated that a WWTP size of at least 500,000 e.i. was necessary to recover the initial investment made for the installation of the biogas upgrading plant after 10 years, when the biomethane was sold at 62 €/MWh, that is the price fixed by the in-force Italian decree on biomethane.

The results of the pilot-scale tests highlighted a clear superiority of the thermo-alkali pre-treatment over the BH, being the first able to increase the WAS productivity by 110% with respect to the control (untreated WAS), compared to only +23.6% obtained with the TPAD scheme. However, the extra biogas production obtained with the BH was of too limited extent to compensate both the higher amount of heat

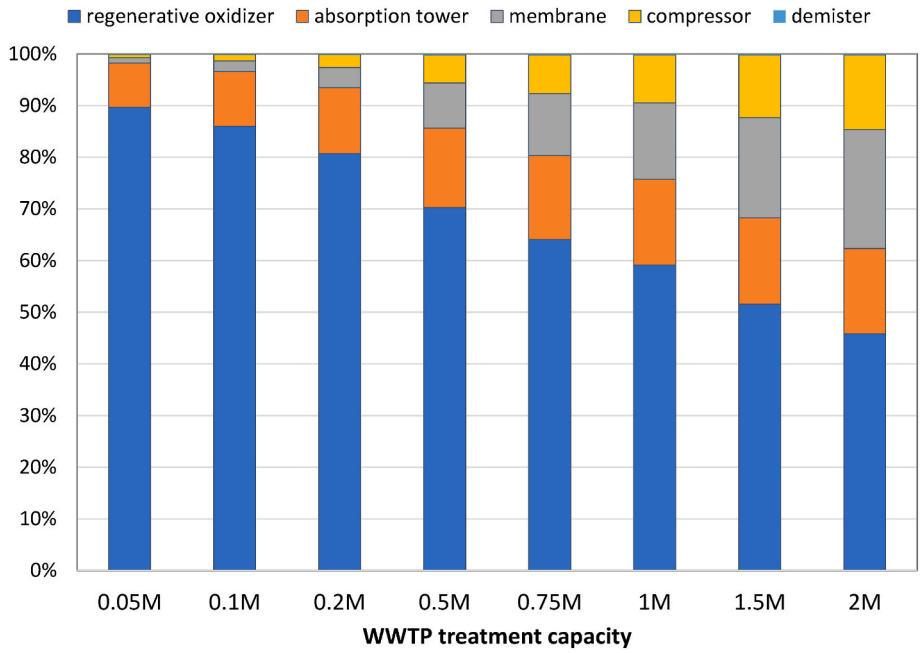

Fig. 5. Relative weight of the cost of the pieces of equipment composing the plant for biogas upgrade as a function of the WWTP treatment capacity. The cost of the demister was negligible for all WWTP sizes.

Table 3
Biogas, biomethane and permeate flows and sizing of the pieces of equipment for a WWTP with a treatment capacity of 500,000 e.i.

	Scenario 0	Scenario 1 (BH)	Scenario 2 (TAH)
Biogas flow rate (Nm^3/d)	3693	3856	4535
Volume of the digester(s) (m^3)	6849	360 + 6849	18 + 6849
Heat necessary for the AD process (MJ/d)	30,378	33,964	34,766
Boiler power (kWt)	351.6	393.1	402.4
Biogas to be upgraded, peak value (Nm^3/d)	3585	3648	4650
Biomethane (97% purity, peak value) (Nm^3/d)	2162	2200	2805
Permeate to be oxidized, peak value (Nm^3/d)	1423	1448	1846
Membrane area (m^2)	105	107	136
Compressor size (kW)	29.7	30.2	38.5

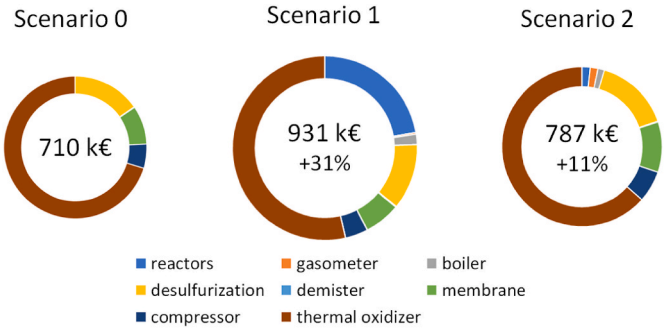

Fig. 6. Relative weight of the cost of the pieces of equipment composing the plant for biogas upgrade in the three scenarios. For Scenario 1 and 2 the cost of the supplementary reactors, gasometer and boiler was calculated as an increase with respect to Scenario 0 where the cost of the three components was not considered. The cost of the demister was negligible for all the three scenarios.

necessary for the pre-treatment and the purchase cost of the additional reactor, with the break-even biomethane price rising to 68 €/MWh.

Finally, the introduction of a thermo-alkali pre-treatment in the WWTP sludge line was able to increase the revenues from biomethane selling by approx. 10 €/MWh, for a WWTP of 500,000 e.i.

The results of the present study can provide useful data to WWTP managers who want to introduce WAS pre-treatments combined with interventions for biogas upgrading in an existing or new sludge line of a WWTP.

CRediT authorship contribution statement

Giuseppe Campo: Writing – review & editing, Validation, Methodology, Investigation, Funding acquisition, Conceptualization. **Alberto Cerutti:** Validation, Methodology, Investigation, Conceptualization. **Mariachiara Zanetti:** Writing – review & editing, Supervision, Project administration, Funding acquisition, Conceptualization. **Barbara Ruffino:** Writing – review & editing, Writing – original draft, Visualization, Validation, Supervision, Project administration, Methodology, Funding acquisition, Formal analysis, Data curation, Conceptualization.

Declaration of competing interest

The authors declare the following financial interests/personal relationships which may be considered as potential competing interests: Giuseppe Campo, Alberto Cerutti, Mariachiara Zanetti, Barbara Ruffino report financial support was provided by Metropolitan Water Company of Turin (SMAT). If there are other authors, they declare that they have no known competing financial interests or personal relationships that could have appeared to influence the work reported in this paper.

Data availability

Data will be made available on request.

Acknowledgements

This research was partially funded by SMAT, Società Metropolitana Acque Torino.

The authors wish to thank Giovanna Zanetti for CHN analyses, Eugenio Lorenzi and Gerardo Scibilia, from SMAT, for fruitful discussions. The Air, Water and Waste Lab from DIATI, Politecnico di Torino, is acknowledged for providing the instrumental resources for the study.

Appendix A. Supplementary data

Supplementary data to this article can be found online at https://doi.org/10.1016/j.jenvman.2024.122780.

References

Ardolino, F., Cardamone, G.F., Parrillo, F., Arena, U., 2021. Biogas-to-biomethane upgrading: a comparative review and assessment in a life cycle perspective. Renew. Sustain. Energy Rev. 139, 110588. https://doi.org/10.1016/j.rser.2020.110588.

Arias, A., Feijoo, G., Moreira, M.T., 2021. Benchmarking environmental and economic indicators of sludge management alternatives aimed at enhanced energy efficiency and nutrient recovery. J Environ Manage 279, 111594. https://doi.org/10.1016/j.jenvman.2020.111594.

Astals, S., Peces, M., Batstone, D.J., Jensen, P.D., Tait, S., 2018. Characterising and modelling free ammonia and ammonium inhibition in anaerobic systems. Water Res. 143, 127–135. https://doi.org/10.1016/j.watres.2018.06.021.

APHA, AWWA, WEF, 2012. In: Standard Methods for the Examination of Water and Wastewater, 22st ed. American Public Health Association, Washington. ISBN 978-087553-013-0.

Bianchini, A., Bonfiglioli, L., Pellegrini, M., Saccani, C., 2016. Sewage sludge management in Europe: a critical analysis of data quality. Int. J. Environ. Waste Manag. 18, 226–238. https://doi.org/10.1504/IJEWM.2016.10001645.

Borzooei, S., Campo, G., Cerutti, A., Meucci, L., Panepinto, D., Ravina, M., Riggio, V., Ruffino, B., Scibilia, G., Zanetti, M.C., 2020. Feasibility Analysis for reduction of Carbon footprint in a Wastewater treatment plant. J. Cleaner Prod 271, 122526. https://doi.org/10.1016/j.jclepro.2020.122526.

Campo, G., Cerutti, A., Lastella, C., Leo, A., Panepinto, D., Zanetti, M.C., Ruffino, B., 2021. Production and destination of sewage sludge in the Piemonte region (Italy): the results of a survey for a future sustainable management. Int. J. Environ. Res. Public Health 18, 3556. https://doi.org/10.3390/ijerph18073556.

Campo, G., Cerutti, A., Zanetti, M., De Ceglia, M., Scibilia, G., Ruffino, B., 2023a. A modelling approach for the assessment of energy recovery and impact on the water line of sludge pre-treatments. Energy 274, 127355. https://doi.org/10.1016/j.energy.2023.127355.

Campo, G., Ruffino, B., Reyes, A., Zanetti, M.C., 2023b. Water-energy nexus in the Antofagasta mining district: options for municipal wastewater reuse from a nearly energy-neutral WWTP. Water 15, 1221. https://doi.org/10.3390/w15061221.

Capodaglio, A.G., Callegari, A., 2023. Energy and resources recovery from excess sewage sludge: a holistic analysis of opportunities and strategies. Resour. Conserv. Recyl. Adv 19, 200184. https://doi.org/10.1016/j.rcradv.2023.200184.

Chen, P., Zheng, Y., Wang, E., Ran, X., Huang, G., Li, W., Dong, R., Guo, J., 2023. Optimal deployment of thermal hydrolysis and anaerobic digestion to maximize net energy output based on sewage sludge characteristics. Water Res. 247, 120767. https://doi.org/10.1016/j.watres.2023.120767.

European Parliament, 2024. Urban wastewater: Council and Parliament reach a deal on new rules for more efficient treatment and monitoring - Consilium (europa.eu). (Accessed 20 May 2024).

Fiore, S., Ruffino, B., Campo, G., Roati, C., Zanetti, M.C., 2016. Scale up evaluation of the anaerobic digestion of food-processing industrial wastes. Renew Energ 96, 949–959. https://doi.org/10.1016/j.renene.2016.05.049.

Ferella, F., Cucchiella, F., D'Adamo, I., Gallucci, K., 2019. A techno-economic assessment of biogas upgrading in a developed market. J. Cleaner Prod 210, 945–957. https://doi.org/10.1016/j.jclepro.2018.11.073.

Ge, H., Jensen, P.D., Batstone, D.J., 2011. Increased temperature in the thermophilic stage in temperature phased anaerobic digestion (TPAD) improves degradability of waste activated sludge. J. Hazard Mater. 187, 355–361. https://doi.org/10.1016/j.jhazmat.2011.01.032.

Gianico, A., Braguglia, C.M., Gallipoli, A., Montecchio, D., Mininni, G., 2021. Land application of biosolids in europe: possibilities, con-straints and future perspectives. Water 13, 103. https://doi.org/10.3390/w13010103.

Hameed, S.A., Riffat, R., Li, B., Naz, I., Badshah, M., Ahmeda, S., et al., 2019. Microbial population dynamics in temperature-phased anaerobic digestion of municipal wastewater sludge. J. Chem. Technol. Biotechnol. 94, 1816–1831. https://doi.org/10.1002/jctb.5955.

ISPRA Report, 2022. Rapporto Rifiuti Speciali - Edizione (in Italian), available at: https://www.isprambiente.gov.it/it/pubblicazioni/rapporti/rapporto-rifiuti-speciali-edizione-2022.

Kwon, Y., Park, J., Kim, G.B., Jo, Y., Park, S., Kim, S.H., 2023. Anaerobic digestion of sewage sludge using anaerobic dynamic membrane bioreactor under various sludge composition and organic loading rates. Bioresour. Technol. 384, 129275. https://doi.org/10.1016/j.biortech.2023.129275.

Liu, X., Wang, D., Chen, Z., Wei, W., Mannina, G., Ni, B.J., 2022. Advances in pretreatment strategies to enhance the biodegradability of waste activated sludge for the conversion of refractory substances. Bioresour. Technol. 362, 127804. https://doi.org/10.1016/j.biortech.2022.127804.

Lovato, G., Albanez, R., Scudeler, Ruggero L., Stracieri, L., Ratusznei, S.M., Domingues Rodrigues, J.A., 2020. Energetic feasibility of a two-stage anaerobic digestion system compared to a single-stage system treating whey and glycerin. Biochem. Eng. J. 161, 107653. https://doi.org/10.1016/j.bej.2020.107653.

Maxwell, C., 2020. Cost indices. available at: https://www.toweringskills.com/financial-analysis/cost-indices. (Accessed 20 May 2024).

Mehari, B.B., Chang, S., 2022. Enhancing temperature-phased biological hydrolysis for methane generation by the optimization of biological hydrolysis time, inoculum, and sludge bypass. Biochem. Eng. J. 180, 108363. https://doi.org/10.1016/j.bej.2022.108363.

Mirmasoumi, S., Saray, R.K., Ebrahimi, S., 2018. Evaluation of thermal pretreatment and digestion temperature rise in a biogas fueled combined cooling, heat, and power system using exergo-economic analysis. Energy Convers. Manage 163, 219–238. https://doi.org/10.1016/j.enconman.2018.02.069.

Mitraka, G.C., Kontogiannopoulos, K.N., Batsioula, M., et al., 2022. A comprehensive review on pretreatment methods for enhanced biogas production from sewage sludge. Energies 15 (18), 6536. https://doi.org/10.3390/en15186536.

Mitraka, G.C., Kontogiannopoulos, K.N., Zouboulis, A.I., Kougias, P.G., 2024. Evaluation of the optimal sewage sludge pre-treatment technology through continuous reactor operation: process performance and microbial community insights. Water Res. 257, 121662. https://doi.org/10.1016/j.watres.2024.121662.

Passos, F., Ferrer, I., 2015. Influence of hydrothermal pretreatment on microalgal biomass anaerobic digestion and bioenergy production. Water Res. 68, 364–373. https://doi.org/10.1016/j.watres.2014.10.015.

Peces, M., Astals, S., Clarke, W.P., Jensen, P.D., 2016. Semi-aerobic fermentation as a novel pretreatment to obtain VFA and increase methane yield from primary sludge. Bioresour. Technol. 200, 631–638. https://doi.org/10.1016/j.biortech.2015.10.085.

Petrollese, M., Cocco, D., 2020. Techno-economic assessment of hybrid CSP-biogas power plants. Renew Energ 155, 420–431. https://doi.org/10.1016/j.renene.2020.03.106.

Pfeiffer, W., Nguyen, V.T., Neumann, J., Awe, D., Tränckner, J., 2020. Operation and control of a full-scale biogas plant treating wastewater from the cleaning of car tanks. Chem. Eng. Technol. 43 (1), 84–94. https://doi.org/10.1002/ceat.201900398.

Price Index, 2024 available at: https://businessanalytiq.com/procurementanalytics/index/sodium-hydroxide-price-index/last accessed 20 May 2024.

Qin, Y., Higashimori, A., Wu, L.J., Hojo, T., Kubota, K., Li, Y.Y., 2017. Phase separation and microbial distribution in the hyperthermophilic-mesophilic-type temperaturephased anaerobic digestion (TPAD) of waste activated sludge (WAS). Bioresour. Technol. 245, 401–410. https://doi.org/10.1016/j.biortech.2017.08.124.

Rajendran, K., Mahapatra, D., Venkatraman, A.V., Muthuswamy, S., Pugazhendhi, A., 2020. Advancing anaerobic digestion through two-stage processes: current developments and future trends. Renewable Sustainable Energy Rev. 123, 109746. https://doi.org/10.1016/j.rser.2020.109746.

Roeleveld, P.J., van Loosdrecht, M.C., 2002. Experience with guidelines for wastewater characterisation in The Netherlands. Water Sci. Technol. 45 (6), 77–87.

Ruffino, B., Campo, G., Cerutti, A., Zanetti, M.C., Lorenzi, E., Scibilia, G., Genon, G., 2016. Preliminary technical and economic analysis of alkali and low-temperature thermo-alkali pretreatments for the anaerobic digestion of waste activated sludge. Waste Biomass Valorization 7 (4), 667–675. https://doi.org/10.1007/s12649-016-9537-x.

Ruffino, B., Campo, G., Cerutti, A., Scibilia, G., Lorenzi, E., Zanetti, M., 2020. Comparative analysis between a conventional and a temperature-phased anaerobic digestion system: monitoring of the process, resources transformation and energy balance. Energy Convers. Manage 223, 113463. https://doi.org/10.1016/j.enconman.2020.113463.

Sanaye, S., Yazdani, M., 2022. Energy, exergy, economic and environmental analysis of a running integrated anaerobic digester-combined heat and power system in a municipal wastewater treatment plant. Energy Rep. 8, 9724–9741. https://doi.org/10.1016/j.egyr.2022.07.155.

Sani, K., Jariyaboon, R., O-Thong, S., Cheirsilp, B., Kaparaju, P., Raketh, M., Kongjan, P., 2022a. Deploying two-stage anaerobic process to co-digest greasy sludge and waste activated sludge for effective waste treatment and biogas recovery. J. Environ. Manage 316, 115307. https://doi.org/10.1016/j.jenvman.2022.115307.

Sani, K., Jariyaboon, R., O-Thong, S., Cheirsilp, B., Kaparaju, P., Wang, Y., Kongjan, P., 2022b. Performance of pilot scale two-stage anaerobic co-digestion of waste activated sludge and greasy sludge under uncontrolled mesophilic temperature. Water Res. 221, 118736. https://doi.org/10.1016/j.watres.2022.118736.

Sarwar, R., Elbeshbishy, E., Parker, W.J., 2018. Codigestion of high pressure thermal hydrolysis-treated thickened waste activated sludge with primary sludge in two stage anaerobic digestion. Environ Prog Sustainable Energy 37 (1), 425–433. https://doi.org/10.1002/ep.12700.

Sillero, L., Sganzerla, W.G., Forster, Carneiro T., Solera, R., Perez, M., 2023. Techno-economic analysis of single-stage and temperature-phase anaerobic co-digestion of sewage sludge, wine vinasse, and poultry manure. J Environ Manage 325, 116419. https://doi.org/10.1016/j.jenvman.2022.116419.

Sillero, L., Perez, M., Solera, R., 2024. Optimisation of anaerobic co-digestion in two-stage systems for hydrogen, methane and biofertiliser production. Fuel 365, 131186. https://doi.org/10.1016/j.fuel.2024.131186.

Sorrels, J.L., 2017. Incinerators and oxidizers. available at: https://www.epa.gov/sites/default/files/2017-12/documents/oxidizersincinerators_chapter2_7theditionfinal.pdf.

Tang, S., Wang, Z., Lu, H., Si, B., Wang, C., Jiang, W., 2023. Design of stage-separated anaerobic digestion: principles, applications, and prospects. Renewable Sustainable Energy Rev. 187, 113702. https://doi.org/10.1016/j.rser.2023.113702.

Tolessa, A., Louw, T.M., Goosen, N.J., 2022. Probabilistic techno-economic assessment of anaerobic digestion predicts economic benefits to smallholder farmers with quantifiable certainty. Waste Manag. 138, 8–18. https://doi.org/10.1016/j.wasman.2021.11.004.

Valenti, G., Arcidiacono, A., Nieto Ruiz, J.A., 2016. Assessment of membrane plants for biogas upgrading to biomethane at zero methane emission. Biomass Bioenergy 85, 35–47. https://doi.org/10.1016/j.biombioe.2015.11.020.

Wang, M., Chen, H., Chang, S., 2022. Impact of combined biological hydrolysis and anaerobic digestion temperatures on the characteristics of bacterial community and digestate quality in the treatment of wastewater sludge. Bioresour. Technol. 362, 127796. https://doi.org/10.1016/j.biortech.2022.127796.

Yan, W., Vadivelu, V., Maspolim, Y., Zhou, Y., 2021. In-situ alkaline enhanced two-stage anaerobic digestion system for waste cooking oil and sewage sludge co-digestion. Waste Manage. (Tucson, Ariz.) 120, 221–229. https://doi.org/10.1016/j.wasman.2020.11.047.

Yang, S., Luo, F., Yan, J., Zhang, T., Xian, Z., Huang, W., Zhang, H., Cao, Y., Huang, L., 2023. Biogas production of food waste with in-situ sulfide control under high organic loading in two-stage anaerobic digestion process: strategy and response of microbial community. Bioresour. Technol. 373, 128712. https://doi.org/10.1016/j.biortech.2023.128712.

Yu, J., Zheng, M., Tao, T., Zuo, J., Wang, K., 2013. Waste activated sludge treatment based on temperature staged and biologically phased anaerobic digestion system. J. Environ. Sci. 25 (10), 2056–2064. https://doi.org/10.1016/S1001-0742(12)60266-6.

Zhao, X., Liu, M., Yang, S., Gong, H., Ma, J., Li, C., Wang, K., 2022. Performance and microbial community evaluation of full-scale two-phase anaerobic digestion of waste activated sludge. Sci. Total Environ. 814, 152525. https://doi.org/10.1016/j.scitotenv.2021.152525.

Zhou, P., Li, D., Zhang, C., Ping, Q., Wang, L., Li, Y., 2024. Comparison of different sewage sludge pretreatment technologies for improving sludge solubilization and anaerobic digestion efficiency: a comprehensive review. Sci. Total Environ. 921, 171175. https://doi.org/10.1016/j.scitotenv.2024.171175.