POLITECNICO DI TORINO
Repository ISTITUZIONALE

One-Year Dynamic Monitoring of an Eight Story CLT Building

Original
One-Year Dynamic Monitoring of an Eight Story CLT Building / Aloisio, A., Pasca, D.P., Kurent, B., Rosso, M.M., De Santis, Y., Tomasi, R.. - 514:(2024), pp. 712-719. (10th International Operational Modal Analysis Conference, IOMAC 2024 Naples (Ita) 22-24 June 2024) [10.1007/978-3-031-61421-7_69].

Availability:
This version is available at: 11583/2991634 since: 2024-08-09T17:14:01Z

Publisher:
Springer

Published
DOI:10.1007/978-3-031-61421-7_69

Terms of use:

This article is made available under terms and conditions as specified in the corresponding bibliographic description in the repository

Publisher copyright
Springer postprint/Author's Accepted Manuscript

This version of the article has been accepted for publication, after peer review (when applicable) and is subject to Springer Nature's AM terms of use, but is not the Version of Record and does not reflect post-acceptance improvements, or any corrections. The Version of Record is available online at: http://dx.doi.org/10.1007/978-3-031-61421-7_69

(Article begins on next page)

27 November 2026

One-year dynamic monitoring of an eight story CLT building

Angelo Aloisio[1,5][0000−0002−6190−0139], Dag Pasquale Pasca[2][0000−0002−3830−2835], and Blaz Kurent[3][0000−0002−9066−6433],Marco Martino Rosso[4][0000−0002−9098−4132],Yuri De Santis[1][0000−0003−1577−7181],Roberto Tomasi[5][0000−0001−8002−8481]

[1] Department of Civil, Construction-Architectural and Environmental Engineering, Università degli Studi dell'Aquila, L'Aquila, Italy
[2] Norsk Treteknisk Institutt (Norwegian Institute of Wood Technology), Oslo, Norway
[3] Faculty of Civil and Geodetic Engineering, University of Ljubljana, Ljubljana, Slovenia
[4] Department of Structural, Geotechnical and Building Engineering, Politecnico di Torino, Turin, Italy
[5] Norwegian University of Life Sciences, As, Norway
angelo.aloisio1@univaq.it

Abstract. This paper outlines the initial findings derived from a year-long dynamic monitoring of an eight-story Cross-Laminated Timber (CLT) building situated in As, Norway. The authors conducted bi-daily dynamic response measurements of the structure since November 2022. In tandem, the environmental humidity, and wind speed were also monitored. A key aspect of the study lies in examining of the interplay between environmental factors and modal parameters, with a specific emphasis on temperature. The analysis reveals that the first two bending modes of the structure exhibit a positive correlation with external temperature, with coefficients of determination of 0.44 and 0.25, respectively. The study also discusses the expected negative correlation between the natural frequencies and moisture content of wood, based on general wood behavior principles.

Keywords: Timber building · continuous monitoring · environmental effects · wind effect.

1 Introduction

The main innovation in engineered wood products has been the introduction of Cross-laminated Timber (CLT), with the European Technical Approval in 2006 [3]. However, there are no studies on the long-term dyanmic performance of CLT buildings and the effect of environmental parameters. The impact of environmental variables like temperature and humidity on the properties of wood has been a longstanding area of research interest [17].

Nontheless, most of the studies on the long-term dynamic response focused on non-timber structures. This research spaned various countries, including Italy [8], the United States [5], and China [19, 13, 6]. Additionally, there is considerable research attention on adobe structures in Peru [21] and Italy [18, 7, 1].

Studies have consistently shown that environmental elements, particularly temperature [20] and humidity [15], profoundly influence the dynamic behavior of buildings [16]. However, the specific investigation into the long-term dynamic monitoring of timber buildings remains limited. For instance, Leyder et al. examined the House of Natural Resources in Switzerland, a building with a post-tensioned timber frame and concrete-timber composite slabs, but did not delve into the correlation between environmental factors and its dynamic response [12]. In recent developments, Larsson et al. have made substantial contributions in this area. Their work involves extensive long-term monitoring of a hybrid timber structure, with a particular focus on understanding the relationship between moisture content and modal parameters [10, 11].

2 Case study

This paper focuses on an eight-storey residential building for students, situated in Ås, Norway. This edifice is 27 m high. It has rectangular footprint measuring 23 by 15 m. The primary construction material is CLT, employed in load-bearing walls and the elevator shaft. The building is characterized by extensive monolithic walls which considerable length-to-height ratios. These walls are built using a variety of fastening mechanisms, including tie-downs, angle brackets, and screws. Underneath the interior walls, there is a 10 mm sound insulation. The building's external façade is cladded with wooden boards, each 20 mm in thickness. Inside, the walls are mostly finished with 25 mm plasterboard, although some are left in their natural state.

In the latter part of 2022, specifically in October, a comprehensive monitoring system was established on the building's rooftop, as depicted in Fig.1(d). This system includes three piezoelectric accelerometers and a fully-equipped weather station, complete with an anemometer and sensors for both temperature and humidity.

Table 1 presents a comprehensive overview of the sensor specifications utilized in the Ås student residence in Norway. Figure 2 provides a visual representation of the sensor setup, including (a) an accelerometer mounted on the rooftop, (b) the data acquisition unit, and (c) an anemometer, elevated 3.1 meters above the roof.

The data acquisition system was developed using Labview, with a CDAQ-9181 CompactDAQ Ethernet chassis equipped with an NI-9205 $\pm$10 V, 250 kS/s, 16-Bit, 32-Channel C Series Voltage Input Module. Data storage is managed on a PC located in a technical room on the roof, with internet access and Dropbox synchronization for data backup. The collected data are organized in text files, each containing seven columns, aligning with the seven sensors detailed in Table 1. A uniform sampling rate of 200 Hz is maintained across all sensors, a decision



(a) (b)

Fig. 1. (a) Pictures of student housing in Ås (Norway) and (b) details of the permanent monitoring system.



(a) (b) (c)

Fig. 2. View of an (a) accelerometer installed on the rooftop, (b) the data acquisition unit and (c) the anemometer.

made to streamline the software for data acquisition and its output processing. Subsequent data analysis is conducted using Python, employing the pyOMA software [14], a tool for Operational Modal Analysis developed by two authors of this study.

Data recording is scheduled twice daily, with each session lasting 30 minutes. These sessions occur at 14:00 and 3:00 to capture the maximum temperature variations, a methodology aligned with other research in the field [1]. Data post-processing in Python follows a streamlined, automated method similar to approaches used in other studies [4, 1]. The analysis has identified three distinct and clearly distinguishable modes, as highlighted in [2]. Furthermore, the stability of these modes greatly facilitates the process of modal tracking.

Table 1. Main characteristics of the sensors installed in the student housing in Ås (Norway).

Channel No.	Measurement	Sensor	Output range	Sensitivity
1	Wind speed	Gill WindMaster ultrasonic anemometer	0-30 m/s	0.16 V/m/s
2	Wind direction	Gill WindMaster ultrasonic anemometer	0-360°	0.16 V/°
3	External temperature	Vaisala transmitter HMT333	-40/80°C	0.0625V/°C
4	External humidity	Vaisala transmitter HMT333	0-100 RH	0.05 V/RH
5	Vibration	Accelerometer (PCB 393B12)	0-1g	10.48 V/g
6	Vibration	Accelerometer (PCB 393B12)	0-1g	10.13 V/g
7	Vibration	Accelerometer (PCB 393B12)	0-1g	10.13 V/g

3 Long-term monitoring

The automatic dynamic identification led to the estimate of three modes corresponding to the building's bending (first two modes) and torsional (third mode) deformation. The experimental setup adopted for the long-term monitoring does not provide a good spatial resolution of the mode shapes. However, past experimental investigations [2] revealed the nature of the first three modes illustrated in Fig.3.

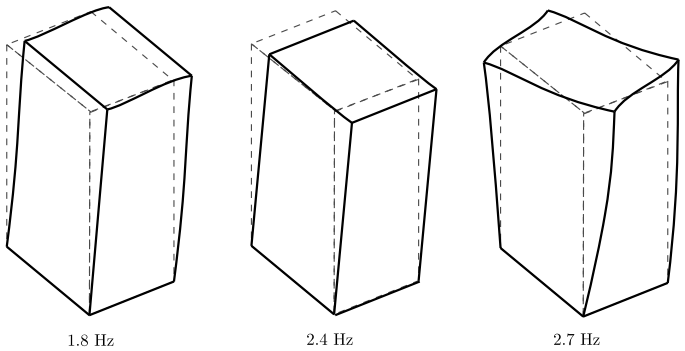

Fig. 3. Illustration of the first three modes.

Figure 4 plots the variation of the (a) natural frequencies and (b) damping ratios of the first three modes as a function of the acquisition date. The estimated

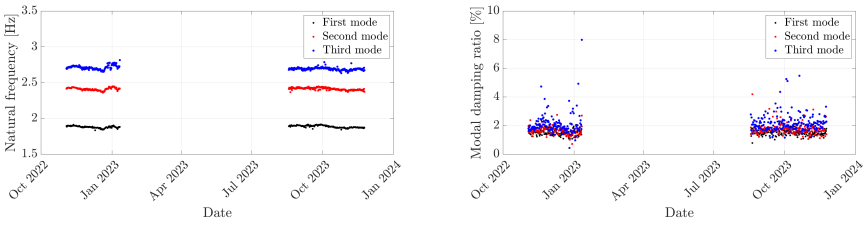

Fig. 4. Variation of the (a) natural frequencies and (b) damping ratios of the first three modes as a function of the acquisition date.

natural frequencies are pretty separate and never get too close to compromise the performance of the adopted modal tracking approach. Tab.2 reports the mean and standard deviation of the natural frequency and damping ratios of the first three modes.

Table 2. Mean and standard deviation (Std. Dev.) of the natural frequency and damping ratios of the first three modes.

Parameter	First mode		Second mode		Third mode	
	Mean	Std. Dev.	Mean	Std. Dev.	Mean	Std. Dev.
Natural Frequency	1.8837	0.0159	2.4119	0.0180	2.7003	0.0259
Damping ratio	0.0152	0.0021	0.0152	0.0021	0.0152	0.0021

The average values are 1.88, 2.41 and 2.70 Hz for the first three modes. The damping ratio exhibits limited variability, always close to 2% for all three modes. The authors did not present the evolution of the Modal Assurance Criterion (MAC). This omission is attributed to the limited number of accelerometers used — only three — which is insufficient for achieving the necessary spatial resolution of mode shapes. Consequently, this limitation hampers the ability to derive accurate and reliable estimates of MAC values.

The measurements of the weather station do not correlate with the modal parameters, except for the external temperature temperature.

Fig. 5(a) shows the relationship between the fundamental frequency and external temperature. In contrast, Fig. 5(b) depicts the fundamental frequency against the average MC of the perimeter walls. In Fig.5(a), a colour gradient from blue to red represents varying MC values, and in Fig. 5(b), the colour coding is based on temperature values. The main observation from the analysis of the correlation between the modal data and the environmental parameters are: The MC and external temperature positively correlate with the first two modes. Furthermore, temperature and MC show a positive correlation, with an R^2 value of approximately 0.6. This finding is counterintuitive, as wood typically dries out with increasing temperature. However, heating systems are active for

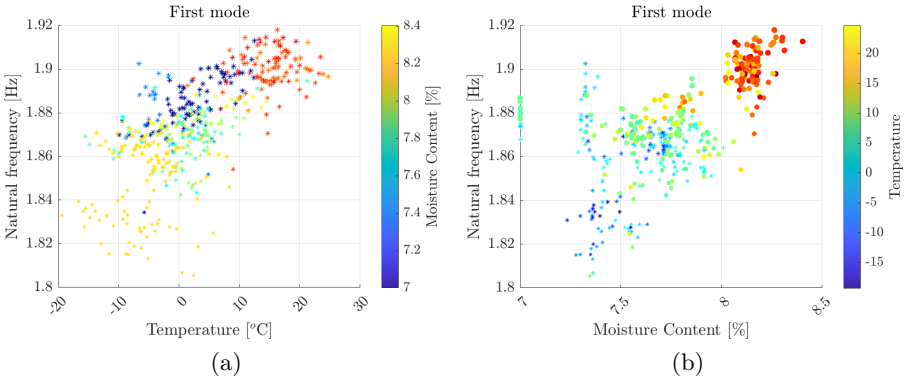

Fig. 5. Natural frequency vs (a) external temperature and (b) average MC.

most of the year in buildings, particularly in colder countries like Norway, except during summer and early fall. This results in a progressive drying of wood, reaching its peak at the end of winter. A positive correlation implies that the structure becomes stiffer as temperature and MC increase. Elevated temperatures lead to thermal expansion, enhancing friction and stiffness in connections. Similarly, increased MC causes timber to swell, leading to enhanced friction and stiffening phenomena [10].

4 Conclusions

This study focused on an eight-story student housing structure in Ås, Norway, made of Cross-laminated Timber (CLT). The authors installed a permanent monitoring system on the rooftop, consisting of three piezoelectric accelerometers and a weather station. The modal tracking identified three distinct and stable modes. The modal frequencies demonstrated minimal influence from wind speed and direction, even during strong wind conditions, suggesting the absence of significant structural nonlinearities under such excitations. The analysis indicates that the external relative humidity and wind speed do not significantly impact the modal parameters of the structure. A positive correlation was found between the MC and the external temperature in the first two modal modes. This relationship, with an R^2 value of approximately 0.6, might be counterintuitive. In colder countries like Norway, heating systems are operational most of the year, leading to a progressive drying of wood, which peaks at the end of winter. The study suggests that increased temperatures and MC contribute to a stiffer structure, owing to thermal expansion and enhanced friction in timber connections.

References

1. Alaggio, R., Aloisio, A., Antonacci, E., Cirella, R.: Two-years static and dynamic monitoring of the santa maria di collemaggio basilica. Construction and Building Materials **268** (2021). https://doi.org/10.1016/j.conbuildmat.2020.121069, cited By 32
2. Aloisio, A., Pasca, D., Tomasi, R., Fragiacomo, M.: Dynamic identification and model updating of an eight-storey clt building. Engineering Structures **213**, 110593 (2020). https://doi.org/10.1016/j.engstruct.2020.110593
3. Brandner, R.: Production and technology of cross laminated timber (clt): A state-of-the-art report. In: Focus Solid Timber Solutions - European Conference on Cross Laminated Timber (CLT). pp. 3–36. University of Bath (2013), conference date: 21-05-2013 Through 22-05-2013
4. Cabboi, A., Magalhães, F., Gentile, C., Cunha, Á.: Automated modal identification and tracking: Application to an iron arch bridge. Structural Control and Health Monitoring **24**(1), e1854 (2017)
5. Clinton, J., Bradford, S., Heaton, T., Favela, J.: The observed wander of the natural frequencies in a structure. Bulletin of the Seismological Society of America **96**(1), 237–257 (2006). https://doi.org/10.1785/0120050052, cited By 273
6. Dong, Y., Tian, H., Zhang, M., Wei, L.: Long-term monitoring of dynamic characteristics of high-rise and super high-rise buildings using strong motion records. Advances in Mechanical Engineering **13**(12) (2021). https://doi.org/10.1177/16878140211067279, cited By 4
7. Gentile, C., Ruccolo, A., Canali, F.: Long-term monitoring for the condition-based structural maintenance of the milan cathedral. Construction and Building Materials **228** (2019). https://doi.org/10.1016/j.conbuildmat.2019.117101, cited By 47
8. Ierimonti, L., Venanzi, I., Cavalagli, N., Comodini, F., Ubertini, F.: An innovative continuous bayesian model updating method for base-isolated rc buildings using vibration monitoring data. Mechanical Systems and Signal Processing **139** (2020). https://doi.org/10.1016/j.ymssp.2019.106600, cited By 27
9. Kita, A., Cavalagli, N., Ubertini, F.: Temperature effects on static and dynamic behavior of consoli palace in gubbio, italy. Mechanical Systems and Signal Processing **120**, 180–202 (2019)
10. Larsson, C., Abdeljaber, O., Bolmsvik, A., Dorn, M.: Long-term analysis of the environmental effects on the global dynamic properties of a hybrid timber-concrete building. Engineering Structures **268**, 114726 (2022)
11. Larsson, C., Abdeljaber, O., Dorn, M.: Dynamic evaluation of a nine-storey timber-concrete hybrid building during construction. Engineering Structures **289**, 116344 (2023)
12. Leyder, C., Chatzi, E., Frangi, A.: Vibration-based model updating of a timber frame structure. Procedia engineering **199**, 2132–2139 (2017)
13. Mu, H.Q., Yuen, K.V.: Modal frequency-environmental condition relation development using long-term structural health monitoring measurement: Uncertainty quantification, sparse feature selection and multivariate prediction. Measurement: Journal of the International Measurement Confederation **130**, 384–397 (2018). https://doi.org/10.1016/j.measurement.2018.08.022, cited By 35
14. Pasca, D.P., Aloisio, A., Rosso, M.M., Sotiropoulos, S.: Pyoma and pyoma_gui: A python module and software for operational modal analysis. SoftwareX **20**, 101216 (2022)

15. Ramos, L., Marques, L., Lourenço, P., De Roeck, G., Campos-Costa, A., Roque, J.: Monitoring historical masonry structures with operational modal analysis: Two case studies. Mechanical Systems and Signal Processing **24**(5), 1291–1305 (2010). https://doi.org/10.1016/j.ymssp.2010.01.011, cited By 371
16. Salawu, O.: Detection of structural damage through changes in frequency: A review. Engineering Structures **19**(9), 718–723 (1997). https://doi.org/10.1016/S0141-0296(96)00149-6, cited By 1999
17. Shirmohammadi, M., Leggate, W., Redman, A.: Effects of moisture ingress and egress on the performance and service life of mass timber products in buildings: a review. Construction and Building Materials **290**, 123176 (2021)
18. Ubertini, F., Comanducci, G., Cavalagli, N., Laura Pisello, A., Luigi Materazzi, A., Cotana, F.: Environmental effects on natural frequencies of the san pietro bell tower in perugia, italy, and their removal for structural performance assessment. Mechanical Systems and Signal Processing **82**, 307–322 (2017). https://doi.org/10.1016/j.ymssp.2016.05.025, cited By 167
19. Zhang, B., Kermani, A., Fillingham, T.: Vibrations of metal web joist timber floors with strongbacks. Proceedings of the Institution of Civil Engineers: Structures and Buildings **169**(8), 549–562 (2016). https://doi.org/10.1680/jstbu.14.00130
20. Zhou, G.D., Yi, T.H.: A summary review of correlations between temperatures and vibration properties of long-span bridges. Mathematical Problems in Engineering **2014** (2014). https://doi.org/10.1155/2014/638209, cited By 63
21. Zonno, G., Aguilar, R., Boroschek, R., Lourenço, P.B.: Analysis of the long and short-term effects of temperature and humidity on the structural properties of adobe buildings using continuous monitoring. Engineering Structures **196**, 109299 (2019)