POLITECNICO DI TORINO
Repository ISTITUZIONALE

Multi-dimensional and multi-level assessment of circular economy strategies in manufacturing systems

Original
Multi-dimensional and multi-level assessment of circular economy strategies in manufacturing systems / Castiglione, C., Pastore, E., Alfieri, A.. - ELETTRONICO. - 122:(2024), pp. 19-24. (31ST CIRP CONFERENCE ON LIFE CYCLE ENGINEERING Torino, Italy 19/21 June 2024) [10.1016/j.procir.2024.01.004].

Availability:
This version is available at: 11583/2989011 since: 2025-10-14T12:58:40Z

Publisher:
Elsevier

Published
DOI:10.1016/j.procir.2024.01.004

Terms of use:

This article is made available under terms and conditions as specified in the corresponding bibliographic description in the repository

Publisher copyright

(Article begins on next page)

27 November 2026

Available online at www.sciencedirect.com

ScienceDirect

Procedia CIRP 122 (2024) 19–24

www.elsevier.com/locate/procedia

31st CIRP Conference on Life Cycle Engineering (LCE 2024)

Multi-dimensional and multi-level assessment of circular economy strategies in manufacturing systems

Claudio Castiglione*[a], Erica Pastore[a], Arianna Alfieri[a]

[a]*Politecnico di Torino, Department of Management and Production Engineering, Corso Duca degli Abruzzi, 24, 10129, Torino (TO), Italy*

* Corresponding author. Tel.: +39-011-090-7205. *E-mail address:* claudio.castiglione@polito.it

Abstract

A manufacturing system can simultaneously exploit more strategies from the Circular Economy paradigm, such as reduction, reuse, repair, refurbishment, and remanufacturing. These strategies involve finished products, raw materials, and components, and each adopted strategy can unpredictably impact the system performance along one or more dimensions (technical, economic, and environmental) at both the planning and the life cycle levels. This paper deepens the simultaneous measurement of the multi-dimensional and multi-level (strategic and tactical planning and life cycle design) performance of the manufacturing system in the presence of circular economy strategies. The Multi-layer Enterprise Input-Output (MEIO) formalisation method is extended to integrate Life Cycle Assessment (LCA) and Life Cycle Costing (LCC) approaches to perform scenario analyses. The proposed approach is applied to a numerical example to show the impacts of adopting new processes for circular economy strategies in a brownfield context. The considered scenarios combine different circular economic strategies applied to different levels of the Bill of Materials of a multi-product environment. The proposed approach can help practitioners and production managers evaluate adopting circular economy strategies. Moreover, the approach can support the development of methods for simultaneous multi-dimensional performance assessment of manufacturing systems at the operational level.

© 2024 The Authors. Published by Elsevier B.V.
This is an open access article under the CC BY-NC-ND license (https://creativecommons.org/licenses/by-nc-nd/4.0)
Peer-review under responsibility of the scientific committee of the 31st CIRP Conference on Life Cycle Engineering (LCE 2024)

Keywords: Performance assessment; Life-cycle assessment; Life cycle costing; Circular economy; Manufacturing systems.

1. Introduction

Manufacturing systems are under pressure due to disruptions in the global supply chains, starting with the COVID-19 pandemic and then continuing with the geopolitical context [18]. Also, as mass personalisation increases variability and fluctuations in demand, such systems require frequent system reconfigurations and wide product varieties [17]. Circular Economy (CE) strategies can support manufacturing systems to reduce lead times by recovering parts and components from end-of-life (EoL) and end-of-use (EoU) products [9] while decoupling the economic growth and the consumption of virgin resources to limit the environmental impact [19] and diversify the raw material supplies [12].

The transition from a linear to a circular paradigm implies developing methodologies for evaluating multi-dimensional performance in a brownfield context. Indeed, components and shared processes of new products exploiting CE strategies are intertwined with current goods produced by the system. Moreover, implementing CE strategies at a specific level of the Bill of Materials (BoM) of one product also impacts the production of other products because of the synergies and strategies that involve other raw materials and components (e.g., the bundle of optional components managed to reduce lead times [6] or inventories while increasing sales [2]). Therefore, implementing CE strategies impacts the entire manufacturing system, from the processes to the product design and raw material supply [4].

This paper proposes a comprehensive and integrated framework for assessing the life cycle environmental and economic performance of adopting CE strategies for a new product with new activities while considering the impacts on the technical, economic, and environmental performance of the other products. The integrated framework exploits the Multi-layer Enter-

E-mail addresses: claudio.castiglione@polito.it (Claudio Castiglione*)., erica.pastore@polito.it (Erica Pastore)., arianna.alfieri@polito.it (Arianna Alfieri).

2212-8271 © 2024 The Authors. Published by Elsevier B.V.
This is an open access article under the CC BY-NC-ND license (https://creativecommons.org/licenses/by-nc-nd/4.0)
Peer-review under responsibility of the scientific committee of the 31st CIRP Conference on Life Cycle Engineering (LCE 2024)
10.1016/j.procir.2024.01.004

prise Input-Output (MEIO) formalisation method to collect and organise data from the system runtime.

The MEIO formalisation method supports and organises the data collection from a manufacturing system to enable simultaneous evaluation of technical, economic, and environmental performance by ensuring data consistency while avoiding redundancies in data and collection activities [7]. MEIO focuses on all the resources produced and consumed by every single activity (e.g., finished products, energy vectors, waste, scrap), workers, machine failures, processing times, and setups, enhancing multi-dimensional system monitoring and control beyond performance assessment.

This paper proposes an improved version of the MEIO method to include environmental and economic life cycle information to allow the concurrent sustainability assessment of introducing new products and activities while updating operational performance. The novel MEIO version integrated into the proposed framework allows performing Life Cycle Assessment (LCA) and Life Cycle Costing (LCC) to evaluate:

- the environmental impact of the new products while updating the impacts of those already in production;
- the economic and financial assessment of introducing new activities and processes in the current system.

The remainder of the paper presents state of the art and the contribution of the paper in section 2, and the introduction of the integrated framework in section 3. Section 4 discusses the implementation of the proposed framework in a numerical example, and section 5 concludes the paper.

2. Literature review

LCA and LCC are consolidated and widely accepted methods for evaluating product environmental footprint and the financial performance of assets like processes and systems. Many contributions in the literature aim to integrate LCA and LCC to provide a multi-dimensional overview.

The combined use of LCA and LCC is suitable for evaluating CE strategies at the system level [1], even for retrieving data directly from the shop floor to perform LCA [20]. The integrated LCA and LCC approach brought benefits (i) to evaluate and improve the manufacturing system [3], and (ii) in the new product development [21], also in combination with the Customer Valuation [5].

However, integrating LCA and LCC has some challenges, such as handling data volatility, data integration, and data inconsistency and redundancies, which are the main reasons for integrating the two methods [11]. Such integration is even more complicated when considering techno-economic analysis tools because of the differences in the data units of analysis and between the required data type [15].

Few approaches address the simultaneous improvement of the environmental sustainability of the products and the selection of the best process technology to optimise system performance by considering the impacts on the entire BoMs of other products. The multi-objective optimisation problems can provide optimal solutions for small problems since model complexity increases exponentially by adding components or processes [13]. Conversely, dynamic life cycle inventory approaches allow scenario analysis or updated system characteristics; as an example, technological gaps to reach pre-determined objectives have been identified through a parametric model integrating LCC and LCA in Yao and Huang [22].

2.1. Contribution

This paper addresses a gap, identified by the recent literature, regarding the lack of tools capable of comprehensively assessing the adoption of CE strategies caused by the complexity of the synergistic performance assessment at different levels and multiple dimensions to satisfy the needs of the large number of stakeholders involved in the implementation of CE strategies [16]. A novel framework is proposed to integrate the LCA and LCC by exploiting the MEIO formalisation method.

The MEIO architecture enhances the scalability of the novel framework, supporting the decision-maker at the system design, production planning and control levels. From the system innovation and production planning perspective, the framework assesses the economic and environmental life cycle sustainability of including new activities in the manufacturing system. At the operational level, the framework provides the technical, economic, and environmental system performance assessment for production monitoring and control.

The aim is to enhance the comprehensive technical, economic, and environmental performance assessment for manufacturing systems. In particular, the proposed approach aims to support the multi-dimensional and multi-level assessment in complex systems adopting circular economy strategies by considering the BoMs of all the involved products and their interactions, the disposal of waste, and the consumption of virgin resources beyond the technical performance of the system.

3. The integrated assessment framework

The MEIO formalisation method collects data related to the resources produced and consumed in the manufacturing systems (e.g., energy vectors, energy dissipated, water and wastewater, scrap, parts, components, raw materials, finished and semi-finished products), the parameters of the system activities (e.g., manufacturing processes, transports, waiting times in inventories, and setups), and the production and consumption functions intertwining the resources in each activity. These data are organised into three tables: the Resource-Activity MEIO table, the Activity Parameters MEIO table, and the Resource-Function MEIO table. Further details are provided in Castiglione, Pastore, and Alfieri [7].

The MEIO method shares some important aspects with the LCA and LCC approaches. Specifically, (i) it is based on the choice of the unit of analysis; (ii) it reports all the average resources produced and consumed by the system (i.e., MEIO provides the inventory for LCA and a database for estimating pro-

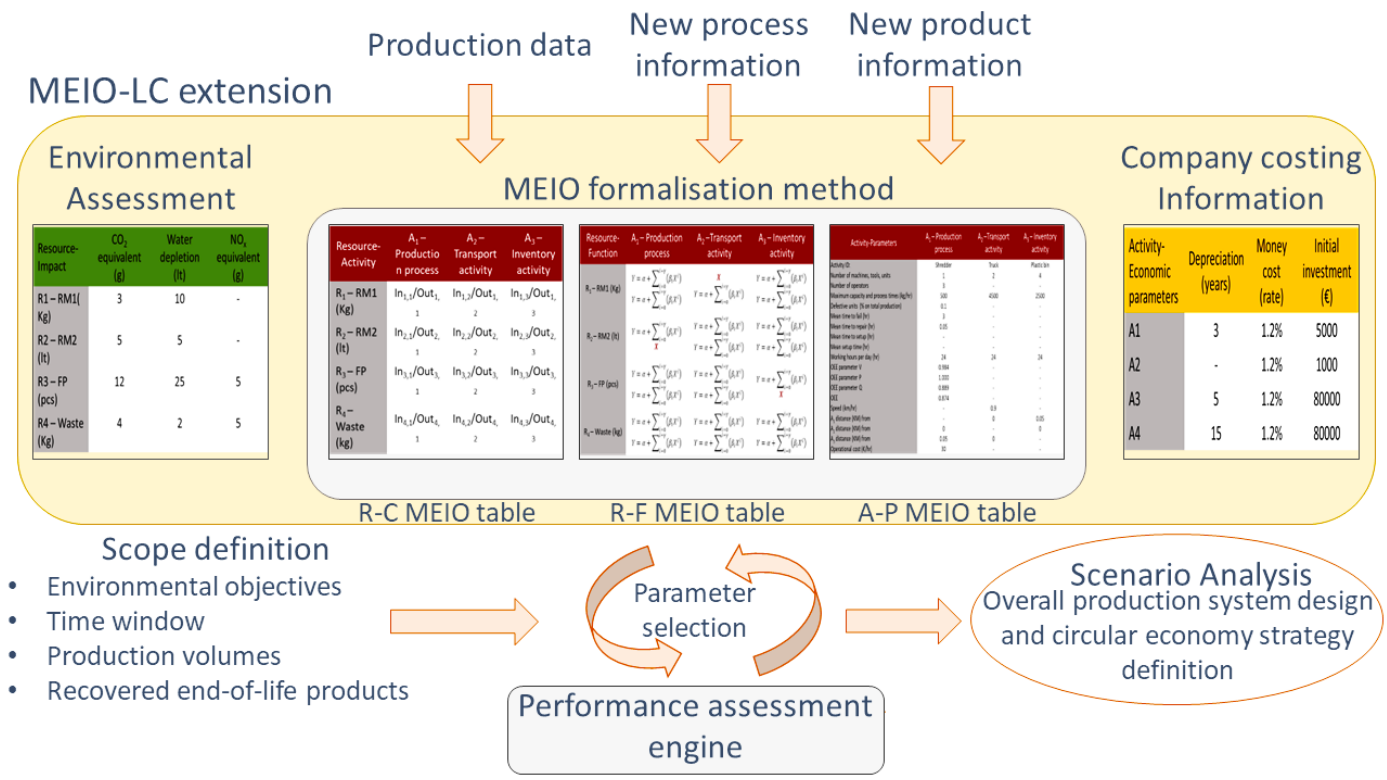

Fig. 1. The MEIO-Life Cycle framework integrates the three MEIO tables with the environmental footprints of the resources involved in the process (green table), the economic and financial information of the activities (yellow table), and the performance assessment engine that exploits the user's parameters.

duction costs by LCC); (iii) it reports economic data regarding the resources of the activities (i.e., machines and equipment), the waste disposal, labour costs, and activity costs. Moreover, the MEIO method is based on the material and energy balance between input and output, thus helping to remind all the involved resources when assessing LCA and LCC.

LCA and LCC need further information that should be integrated within the proposed approach. LCA requires the evaluation of the impact of all the resources consumed and produced by the system concerning the chosen objective function, such as the carbon dioxide (CO_2) equivalent emissions required to calculate the impacts in terms of Greenhouse Gas (GHG) [10]. LCC requires economic and financial information to evaluate the economic impact of adopting one technology by considering the initial investment and estimating the fixed and variable production costs in the system life cycle [14].

Fig. 1 shows the framework of the MEIO-Life Cycle (MEIO-LC) extension. The data collected and organised by MEIO are enriched with new information collected in two new tables (the green and yellow ones in Fig. 1) to allow LCA and LCC assessment; also, a set of information in common regarding the specific scope of the multi-dimensional and multi-level performance assessment is added to the *Performance Assessment Engine* (PAE, bottom part of Fig. 1).

The *Environmental Assessment* table (the green table in Fig. 1) collects data regarding the environmental footprint of each resource produced and absorbed by the system. For example, it indicates the overall quantity of CO_2-equivalent or freshwater (in columns) emitted and used to obtain a specific resource (in rows).

The *Company Costing Information* table (the yellow table in Fig. 1) intertwines each system activity (in rows) with the financial and economic parameters (in columns), such as average capital cost of the company, initial investment costs, and depreciation years.

The PAE receives the input data for the scenario analysis to compare different alternatives regarding environmental objectives, time window duration, production volumes, and the estimated volumes of recovered EoL and EoU products to be reintroduced in the value chain. PAE comprises a set of rules and indicators whose evaluation can be developed and automatised by different software routines (from simple spreadsheets to more sophisticated executable software connected with integrated databases). The flexibility of such a PAE tool makes this approach scalable to the needs and knowledge of the interested manufacturing companies, from micro, small, medium, and large enterprises.

In particular, PAE includes two sets of KPIs: (i) the life cycle and (ii) the strategic and tactical performance for production planning and control. PAE updates both sets of indicators by changing the input parameters that the user provides for the scenario analyses. The set of life cycle KPIs provides the Net Present Value (NPV) for each new activity while updating the NPV of those already implemented and impacted by the changes in the periodical flows (e.g., the emergence of new costs and the reduction of some current ones). The analysis can

be performed both on single activities and sets of activities (e.g., lines or departments), guaranteed by the MEIO aggregation and disaggregation functions [8].

Also, life cycle KPIs include the formulas to evaluate the environmental footprint of specific LCA functions (e.g., water depletion and GHG emissions) by considering the impacts of all the produced and consumed resources. Each resource emitted or absorbed by the system has a negative or positive impact on the LCA functions, respectively, proportional to the environmental parameters associated with the resource in the Environmental Assessment table.

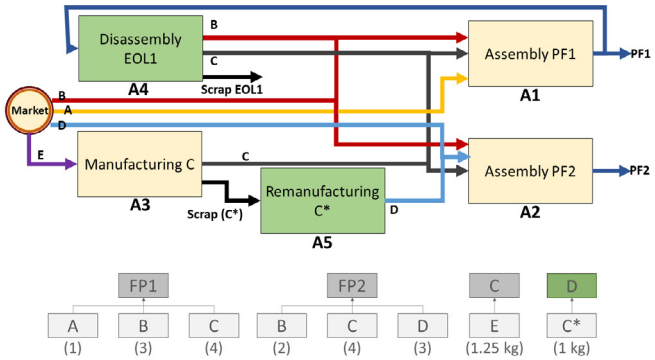

Fig. 2. Manufacturing system for producing products FP1 and FP2. There are three already established processes (yellow boxes) to produce component C (activity A3) and assembly products FP1 (A1) and FP2 (A2), and two new activities for CE strategies (green boxes). At the bottom, the BoM is given.

4. Numerical example

A numerical example is proposed to show the use of the extended MEIO-LC approach to evaluate the adoption of new CE strategies in an already-established manufacturing system. For space reasons, the example is focused on the GHG footprint, but it can be easily extended to freshwater depletion.

The example involves two assembled products, FP1 and FP2, whose BoMs are reported at the bottom of Fig. 2. FP1 and FP2 are both composed of components B and C (3 units of B for FP1, 2 units of B for FP2, 4 units of C for both FP1 and FP2); they also have specific components: component A for FP1 and D for FP2. Component C is manufactured by working 1.25 kg of raw material E. Components A, B, and D, and the raw material E are purchased.

The introduction of two CE strategies is analysed in the numerical example. The two strategies involve two new activities (green boxes in Fig. 2): (i) the collection of EoL products of FP1 (EOL1) to be disassembled for recovering valuable components (activity A4); (ii) the remanufacturing of the scrap of component C (C*) to partially substitute the purchasing of component D (activity A5). Table 1 shows the environmental footprints for freshwater depletion and GHG emissions of the resources involved in the process.

When a resource is embodied in a new semi-finished or finished product, its environmental footprint is added to those of the other components. Conversely, when CO_2 is absorbed from the environment, or freshwater is returned to the environment, a negative contribution of the environmental footprint is added to the output product to indicate the environmental regenerative and considerably positive impact the product has.

Table 1. Environmental footprints for GHG emissions and freshwater depletion of the resources involved in the manufacturing system under analysis.

Supplied resources	CO_2 equivalent (gr)	Freshwater (l)
A (1 pc)	150	10
B (1 pc)	500	5
D (1 pc)	300	30
E (1kg)	250	20
Power (1 kwh)	50	0,5
Freshwater (1 l)	0	1

Table 2 shows the Resource-Activity MEIO table for the 5 activities (in columns) and all the resources produced and consumed by the system (in rows). Through the A1 activity (i.e., the assembly of FP1), producing 1 unit of FP1 requires 1 unit of A, 3 units of B, and 4 units of C, and absorbs 10 kWh of power and 3 l of fresh water.

Table 2. The Resource-Activity MEIO table of the 5-activity manufacturing system.

Resource-Activity	A1		A2		A3		A4		A5	
	In	Out	In	Out	In	Out	In	Out	In	Out
A	1	0	0	0	0	0	0	0	0	0
B	3	0	2	0	0	0	0	2	0	0
C	4	0	4	0	0	2	0	3	0	0
D	0	0	3	0	0	0	0	0	0	1
E	0	0	0	0	2,5	0	0	0	0	0
Power	10	0	15	0	3	0	3	0	1	0
U. Power	0	7,5	0	12	0	2	0	2,5	0	0,75
W. Power	0	2,5	0	3	0	1	0	0,5	0	0,25
Freshwater	3	0	10	0	1	0	1	0	1	0
Wastewater	0	3	0	10	0	1	0	1	0	1
PF1 (8 kg)	0	1	0	0	0	0	0	0	0	0
PF2 (9 kg)	0	0	0	1	0	0	0	0	0	0
EOL1 (8 kg)	0	0	0	0	0	0	1	0	0	0
Scrap C (1 Kg)	0	0	0	0	0	0,5	0	0	1	0
Scrap EOL1 (1 kg)	0	0	0	0	0	0	0	3	0	0

In Table 2, the kg reported for each resource indicates the weight of the unit, and it ensures the mass balance. The power balance is shown by observing that 10 kWh of power corresponds to 2.5 of thermal kWh dissipated by the machines and measured (*W. Power* row of the table), and 7.5 kWh of used power obtained for difference (*U. Power* row of the table). The disassembly activity (A4) of EOL1 allows for recovering 2 units of B and 3 units of C, which are less than the units required to produce the original product FP1; this allows to model the partial recovery of components and materials from EOL due to potentially damaged parts, or scraps produced during the disassembly.

Fig. 3 shows the scenario analysis of different degrees of adoption of the two CE strategies. The strategy of disassembling EOL1 to reuse components that substitute virgin resources is evaluated through various scenarios in the differently coloured curves of the figure. Each curve represents a different ratio between the volume of EOL1 and the fixed product demand. The strategy of remanufacturing C* for producing com-

ponent D from scrap is evaluated through various scenarios in the different values of the horizontal axis of the figure. For each curve, each marker represents a percentage of remanufactured C*.

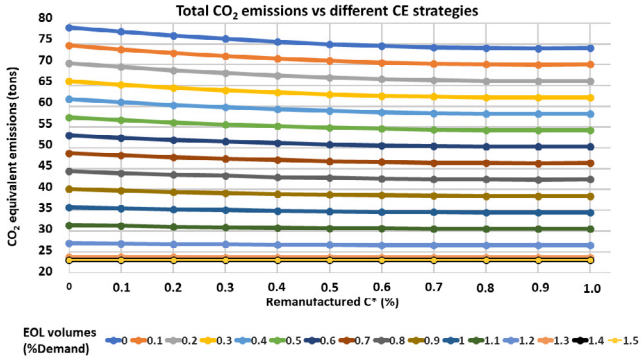

Fig. 3. Scenario analysis for evaluating GHG emissions of 15 levels of EOL1 volumes recovered and disassembled for components reuse (coloured lines) and 11 levels of C* remanufacturing.

The first blue line from the top of Fig. 3 shows the GHG emissions in the case the EOL1 recovering strategy is not adopted, and various levels of adopting the C* remanufacturing strategy (i.e., EOL1 recovered volumes equal to 0). Instead, the markers at point 0 (i.e., the first column of markers) show the GHG emissions if the C* remanufacturing strategy is not adopted while various levels of EOL1 are recovered. All the other markers in the graph represent a mixed strategy of simultaneously adopting different degrees of EOL1 recovery and C* remanufacturing.

The scenario analysis of Fig. 3 shows that when the recovered EOL1 volumes are limited or zero (upper part of the graph), the C* remanufacturing CE strategy has a positive impact on decreasing the overall GHG emissions (i.e., moving from left to right in the graph). However, the larger the recovered EOL volumes, the lower the effectiveness of remanufacturing C*. In such cases, the EOL1 recovery provides most of the necessary components. The EOL1 recovery strategy is the best to reduce GHG emissions significantly. In contrast, the impact of the C* remanufacturing strategy (the difference between the marker in x=0 and the marker in x=1) decreases with the increase of recovered EOL1 volumes.

However, not all the degrees of adoption of the two strategies may be available for the company. For instance, the availability of EOL1 to be recovered could be limited. In such cases, the scenario analysis supports introducing a combined strategy to compensate for the limited adoption of one strategy with a broader adoption of the other. Therefore, the framework proposes solutions through scenario analysis, supporting the decision-maker in choosing the best system configuration to implement CE strategies.

The MEIO-LC framework contains all the information about produced and consumed resources and their costs; thus, it can support the use of LCC by showing how, by introducing new strategies, the cash flows of each period change. Therefore, LCC information on adopting the new strategies can be simultaneously evaluated with the environmental footprints of other functions like water depletion. The main output of the proposed framework is a dashboard to evaluate the introduction of CE strategies in brownfields through a multi-dimensional performance approach.

The LCC is based on the evaluation of the Net Profit Value (NPV) following the formula:

$$NPV = -Investment + \sum_{t}^{T} = 1 \frac{cashflow_t}{(1+r)^t},$$

where r is the cost of money. The economic sustainability of the different alternatives for system innovation is evaluated by comparing their initial investment with the cash flows generated in the following months or years.

It is important to notice that the sum of the cash flows of the T periods involves different stages of product development or process implementation. For example, in the proposed numerical case, periodic cash flows at the very beginning can include the machine design stage, costs for partnership development for EoL1 recovery and the practitioners' support to update the ERP. Then, cash flows can be focused on the production stage, which may be characterised by initial periods with larger costs caused by inexperience, scarcely optimised batch size, and lack of forecast regarding EoL recovery. After some periods, negative cash flows may be reduced, and a fully optimised process ensures larger revenues that compensate for the initial investment and the past negative cash flows. Finally, the last periods can include the disposal of the machines and the processes in the cash flows.

The information for the cash flows comes from the Activity Parameters MEIO table when they regard one-off fees, while the data comes from the Resource-Activity MEIO table when they are variable production costs affected by manufacturing decisions such as batch size, scheduling, and manufacturing system control.

5. Conclusion

This paper proposes a life cycle extension of the Multi-layer Enterprise Input-Output formalization method (MEIO-LC) to evaluate the introduction of new activities and processes in the manufacturing system. It assesses the environmental and economic performance on the life cycle dimension and technical, economic, and environmental performance from the tactical and strategical point of view. The proposed framework allows a multi-dimensional and multi-level scenario analysis to assess system performance. It can be used in the presence of changes in the current system, such as the introduction of Circular Economy strategies that affect the manufacturing of many products at different levels of the Bill of Materials. For this reason, it is particularly suitable for adoption in brownfield contexts, where some information about the initial manufacturing system is available. The proposed framework is flexible because

it can be easily scaled up and down to focus on specific manufacturing lines or entire departments, thanks to the scalability characteristic of the MEIO method [8]. Moreover, the performance assessment engine, a set of rules and indicators that allow the MEIO extension to perform LCA and LCC, can be implemented in spreadsheets, which are widely adopted in Micro, Small, and Medium Enterprises. Still, it can also be integrated into more sophisticated routines connected to the shop floor and the company databases to be updated with data from production lines.

The proposed approach can support production planners, industrial engineers, and managers in assessing the performance of manufacturing systems and making strategic decisions on integrating new activities or manufacturing strategies while also considering tactical information from the shop floor. Moreover, the LCC table can be extended to include other phases like product design and prototyping. However, these activities do not directly concern the manufacturing system and could be included in future research.

Acknowledgements

This study was carried out within the MICS (Made in Italy – Circular and Sustainable) Extended Partnership and received funding from the European Union Next-GenerationEU (PIANO NAZIONALE DI RIPRESA E RESILIENZA (PNRR) – MISSIONE 4 COMPONENTE 2, INVESTIMENTO 1.3 – D.D. 1551.11-10-2022, PE00000004). This manuscript reflects only the authors' views and opinions, neither the European Union nor the European Commission can be considered responsible for them.

References

[1] Alejandrino, C., Mercante, I. T., & Bovea, M. D. 2022. Combining O-LCA and O-LCC to support circular economy strategies in organizations: Methodology and case study. Journal of Cleaner Production, 336, 130365.

[2] Alfieri, A., Castiglione, C., & Pastore, E. 2020. A multi-objective tabu search algorithm for product portfolio selection: A case study in the automotive industry. Computers & Industrial Engineering, 142, 106382.

[3] Auer, J., Bey, N., & Schäfer, J. M. 2017. Combined Life Cycle Assessment and Life Cycle Costing in the Eco-Care-Matrix: A case study on the performance of a modernized manufacturing system for glass containers. Journal of Cleaner Production, 141, 99-109.

[4] Blomsma, F., Pieroni, M., Kravchenko, M., Pigosso, D. C., Hildenbrand, J., Kristinsdottir, A. R., ... & McAloone, T. C. 2019. Developing a circular strategies framework for manufacturing companies to support circular economy-oriented innovation. Journal of cleaner production, 241, 118271.

[5] Bovea, M. D., & Vidal, R. 2004. Increasing product value by integrating environmental impact, costs and customer valuation. Resources, Conservation and Recycling, 41(2), 133-145.

[6] Castiglione, C., Alfieri, A., & Pastore, E. 2018. Decision Support System to balance inventory in customer-driven demand. IFAC-PapersOnLine, 51(11), 1499-1504.

[7] Castiglione, C., Pastore, E., & Alfieri, A., 2022. Technical, economic, and environmental performance assessment of manufacturing systems: the multi-layer enterprise input-output formalization method. Production Planning & Control, 1-18.

[8] Castiglione, C., & Fiore, E. 2022. Sustainable production networks: A design methodology based on the cooperation among stakeholders. Journal of cleaner production, 362, 132308.

[9] Castiglione, C., Alfieri, A., & Pastore, E. 2023. Circular economy strategies at the manufacturing system scheduling level: the impacts on Makespan, Materials Research Proceedings, Vol. 35, pp 250-257.

[10] Finkbeiner, M., Inaba, A., Tan, R., Christiansen, K. and Klüppel, H.J., 2006. The new international standards for life cycle assessment: ISO 14040 and ISO 14044. The international journal of life cycle assessment, 11, pp.80-85.

[11] França, W. T., Barros, M. V., Salvador, R., de Francisco, A. C., Moreira, M. T., & Piekarski, C. M. 2021. Integrating life cycle assessment and life cycle cost: A review of environmental-economic studies. The International Journal of Life Cycle Assessment, 26, 244-274.

[12] Gaustad, G., Krystofik, M., Bustamante, M., & Badami, K. (2018). Circular economy strategies for mitigating critical material supply issues. Resources, Conservation and Recycling, 135, 24-33.

[13] Hashemi Sohi, F. S., Mansour, S., & Dehghanian, A. 2022. Multi-objective optimization for selecting sustainable materials with simultaneous consideration of several components in a product. International Journal of Sustainable Engineering, 15(1), 107-121.

[14] Kambanou, M. L., & Sakao, T. 2020. Using life cycle costing (LCC) to select circular measures: A discussion and practical approach. Resources, Conservation and Recycling, 155, 104650.

[15] Mahmud, R., Moni, S. M., High, K., & Carbajales-Dale, M. 2021. Integration of techno-economic analysis and life cycle assessment for sustainable process design–A review. Journal of Cleaner Production, 317, 128247.

[16] Oliveira, M., Miguel, M., van Langen, S. K., Ncube, A., Zucaro, A., Fiorentino, G., ... & Genovese, A. (2021). Circular economy and the transition to a sustainable society: integrated assessment methods for a new paradigm. Circular Economy and Sustainability, 1, 99-113.

[17] Qin, Z., & Lu, Y. 2021. Self-organizing manufacturing network: A paradigm towards smart manufacturing in mass personalization. Journal of Manufacturing Systems, 60, 35-47.

[18] S. Roscoe, E. Aktas, K. J. Petersen, H. D. Skipworth, R. B. Handfield, F. Habib, 2022. Redesigning global supply chains during compounding geopolitical disruptions: the role of supply chain logics. International Journal of Operations & Production Management, 42(9), 1407-1434.

[19] Scheel, C., Aguiñaga, E., & Bello, B. 2020. Decoupling economic development from the consumption of finite resources using circular economy. A model for developing countries. Sustainability, 12(4), 1291.

[20] Vacchi, M., Siligardi, C., Cedillo-González, E. I., Ferrari, A. M., & Settembre-Blundo, D. 2021. Industry 4.0 and smart data as enablers of the circular economy in manufacturing: Product re-engineering with circular eco-design. Sustainability, 13(18), 10366.

[21] Wu, M., Sadhukhan, J., Murphy, R., Bharadwaj, U., & Cui, X. 2023. A novel life cycle assessment and life cycle costing framework for carbon fibre-reinforced composite materials in the aviation industry. The International Journal of Life Cycle Assessment, 28(5), 566-589.

[22] Yao, Y., & Huang, R. 2019. A parametric life cycle modeling framework for identifying research development priorities of emerging technologies: a case study of additive manufacturing. Procedia CIRP, 80, 370-375.