POLITECNICO DI TORINO
Repository ISTITUZIONALE

Circular economy strategies at the manufacturing system scheduling level: the impacts on Makespan

Original
Circular economy strategies at the manufacturing system scheduling level: the impacts on Makespan / Castiglione, C., Alfieri, A., Pastore, E.. - ELETTRONICO. - 35:(2023), pp. 250-257. (XVI Convegno AITEM Napoli (Italy) 13-15 Settembre 2023) [10.21741/9781644902714-30].

Availability:
This version is available at: 11583/2981796 since: 2023-11-19T16:26:09Z

Publisher:
Materials Research Forum LLC.

Published
DOI:10.21741/9781644902714-30

Terms of use:

This article is made available under terms and conditions as specified in the corresponding bibliographic description in the repository

Publisher copyright

(Article begins on next page)

28 November 2026

Materials Research Proceedings 35 (2023) 250-257 https://doi.org/10.21741/9781644902714-30

Circular economy strategies at the manufacturing system scheduling level: the impacts on Makespan

Claudio Castiglione[1,a*], Arianna Alfieri[1,b] and Erica Pastore[1,c]

[1]Politecnico di Torino, Department of Management and Production Engineering, Corso Duca degli Abruzzi, 24, 10129 Torino, Torino, Italy

[a]claudio.castiglione@polito.it, [b]arianna.alfieri@polito.it, [c]erica.pastore@polito.it

Keywords: Production Planning, Scheduling, Circular Economy

Abstract. The use of end-of-life and end-of-use products to recover parts and raw materials can mitigate the severity of the increasing price of raw materials, the disruption of global supply chains for critical raw materials (e.g., chips and rare earth elements), and reduce the environmental impacts. Furthermore, circular economy strategies can improve scheduling by shortening the completion times of the components. This paper investigates the effects of implementing circular economy strategies (repair, reuse, and re-manufacturing) at the scheduling level in a manufacturing system involving disassembly, re-manufacturing, and assembly operations. A set of eight priority rules modify the job priority and the strategy implementation. The results show that including circular economy strategies through disassembly can reduce the makespan, but scheduling is pivotal to managing the frequent changes in the quality of end-of-life products and their volumes and the current production order mix.

Introduction

Industry 4.0 (I4.0) and Circular Economy (CE) paradigms have been leading the innovation in manufacturing companies and scholars' interests for at least a decade. Furthermore, current research highlights the enabling role of I4.0 technologies in implementing CE practices while addressing the manufacturing challenges of mass customisation macrotrend [1]. I4.0 provides enabling technologies for CE from a twofold point of view: (i) advanced manufacturing systems with a high degree of flexibility and reconfigurability, (ii) digitalisation and data-driven approaches to allow the design and management of more complex systems [2].

Adopting I4.0 technologies and moving to the CE paradigm is important for the international competitive advantage of manufacturing companies [3]. The supply of raw materials has become critical [4], especially for importing countries like Italy [5], because of the disruptions of global supply chains that began with the Covid19 pandemic and propagated due to the recent geopolitical conflicts [6]. At the same time, the advent of mass customisation and the transition towards sustainable development are increasing product varieties, fluctuations in product demand, and the need to increase product life-cycle through, for example, repairing and re-manufacturing [7].

The main three barriers to the effective implementation of I4.0 and its enabling role for the CE transition are (i) the interoperability among different processes, (ii) the modelling of the processes and their integration to optimise the system, and (iii) the coordination and management of the entire manufacturing system and the digital counterparts that support it. [1]. CE actions exponentially increase the severity of these barriers because of the many cycles and flows added to the manufacturing system through the 6Rs (Reduce, Reuse, Repair, Re-manufacture, Re-design, Recycle) [8]. This complexity increases the risk of using new tools and machines in an obsolete way [9]; for example, optimising the stand-alone processes can result inefficient from the point of view of the entire system.

A wider and more flexible implementation of CE strategies within manufacturing systems involves the introduction of disassembling operations [10]. Disassembly enhances the reuse and

Content from this work may be used under the terms of the Creative Commons Attribution 3.0 license. Any further distribution of this work must maintain attribution to the author(s) and the title of the work, journal citation and DOI. Published under license by Materials Research Forum LLC.

re-manufacturing of components from recovered end-of-life and end-of-use products, their repair, or their recycling [11]. Disassembly operations can make available many components and optional that can be bundled together to improve customer satisfaction while reducing lead times [12], or balance inventories [13]. However, disassembling operations may jeopardise manufacturing performance. For example, they lead to several flows of generally low-value items requiring space and generating holding costs, with different market demands for each disassembled part [14]. In this context, production planning and control approaches are crucial, especially in the many available strategies offered by the CE paradigm, combining technologies to optimise overall performance and overcoming challenges, also in system design [15]. Moreover, additional sources of uncertainty must be considered, such as quality issues, low value of recovered components, uncertainties in quality and volumes of provided products, and the fact that disassembly operations are mainly performed by workers rather than robots [16].

In the literature, scheduling problems involving disassembly, re-manufacturing, and reassembly operations focus on reducing tardiness and makespan [17] and on finding the minimal operation sequence to disassemble returned end-of-life or use products (namely, returns) [18]. However, scheduling problems with disassembly are NP-hard; small problems can be solved by finding optimal solutions, while industrial-scale problems require heuristic and approximated approaches [19]. Heuristics have been applied to families of products [20], multi-objective stochastic scheduling problems [21], and multi-product scheduling problems [22]. Priority rules are mainly used for scheduling problems because of ease of understanding and implementation and good performance [23], especially when calibrated on every single workstation [24].

From the production planning aspect, the literature is focused on the solution approach, while, from the disassembly point of view, the literature investigates the technical and economic performance. Instead, the literature neglects the intersection with CE strategies and approaches intertwined with sustainability that require a simultaneous multi-dimensional assessment [25].
This paper investigates the impact of including CE strategies in a scheduling problem for a system characterised by disassembly, re-manufacturing, and assembly workstations, including quality control and returns repair. The schedules are identified by applying eight priority rules derived from the literature and combined to deal with the CE strategies. Each priority rule is applied to a scenario with specific conditions of finished product demand and volumes of reparable and irreparable end-of-life and use products, which are exploited to recover parts and components.

Problem description

The inclusion of CE strategies and disassembly operations complicates the scheduling problem.

Apart from the standard scheduling decisions, the inclusion of CE strategies also includes decisions about the strategy each job (products, returns, or components) must follow. The impact of these further decisions on manufacturing performance is investigated in this paper by considering a realistic manufacturing system based on a structure diffused in the literature that assumes three main production areas: disassembly, processing, and reassembly. The scheduling problem includes the following further decisions: (i) allocating recovered products to repair or disassembly workstations, (ii) deciding which of the components recovered from the disassembly will be re-manufactured rather than reused as is.

Furthermore, the system must deal with increased system variability because the availability of the return depends on the quantity of end-of-life and use products disposed of by consumers. Also, the quality level of the returns can make them irreparable or particularly long and expensive to recover their components. Therefore, to consider the impact on manufacturing performance of these sources of uncertainty, a scenario analysis investigates (i) different combinations of production orders and (ii) quality of returns, and (iii) different quantities of returns compared to the total production orders. Finally, priority rules are investigated to manage synchronisation between production orders and returns disassembly in the different scenarios. In fact, disassembly

Materials Research Proceedings 35 (2023) 250-257 https://doi.org/10.21741/9781644902714-30

operations may fast saturate buffers with components of low values required by production activities at different times and in different quantities.

Fig. 1 shows the studied system implementing the following CE strategies: repair, re-manufacturing, and reuse. It consists of the following five single-server stations, identified by grey circles in the figure: disassembly (D), manufacturing (M), assembly (A), quality inspection (Q), and repair (R).

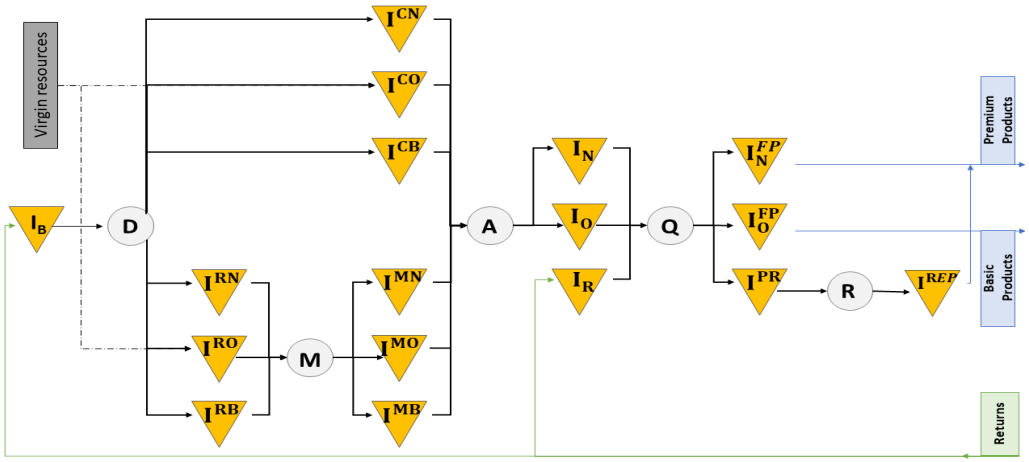

Fig. 1. Manufacturing system with five single-server workstations for the following operations: disassembly (D), manufacturing (M), assembly (A), quality inspection (Q), and repair (R).

The proposed system produces two types of finished products (FP): type N is a new top premium product, while type O is the basic version. Unlike FP-O, production orders for FP-N can be satisfied through repaired returns (REP). There are two types of returns (green arcs in Fig. 1): the first can be repaired (R), while the second (B) can be disassembled. The recovered products of type B are stored in a buffer (I_B) and provide components (C) and raw materials (R).

Components C are supplied by other companies (virgin resources) or recovered from the disassembled products and reused without any processing activity. At the same time, raw materials R are provided by other companies (virgin resources) or retrieved from the disassembled returns, but they are re-manufactured within the system to obtain manufactured components of the set M. The FP-N and FP-O are produced by assembling components from set C and manufactured parts from set M. Raw materials, components, and manufactured parts are clustered into three groups: (a) parts and components necessary for FP-N, i.e., RN, CN, and MN, respectively; (b) raw materials, parts, and components necessary for FP-O, i.e., RO, CO, and MO, respectively; c) raw materials, parts, and components necessary for both products, i.e., RB, CB, and MB, respectively. Assume that component CN can be reused for FP-N without processing, or it can be re-manufactured to become a part of MO.

FP-N, FP-O, and R are subjected to a quality inspection that: verifies the quality level for items FP-N and FP-O and identifies the necessary tasks for repairing items R.

Design of Experiment

Discrete Event Simulation is used to study the system in various scenarios. The scenarios are characterised by various proportions of the two types of returns and eight priority rules to find the sequence of jobs processed in each of the five workstations. The simulation model is developed and evaluated in Arena 16.2.

The experiment investigates the makespan because of its importance in manufacturing since it represents the time required to satisfy all the production orders. System processing times are proportionally reduced together with job arrival time to have a sufficient number of observations

Materials Research Proceedings 35 (2023) 250-257 https://doi.org/10.21741/9781644902714-30

in a limited amount of time (1-2 work shifts of 8 hours) to improve the comprehension of CE strategies on makespan. Assembly and quality control are the most time-consuming activities because they include setups, packaging, and small reparations. At the same time, the full return disassembly is considered a destructive activity to quickly recover key components such as chipboards, metallic frames and bodies, and small electric motors.

In Table 1, the fixed parameters are reported: the processing times of workstations and the total number of production orders that must be satisfied.

Table 1. Fixed parameters of the simulation model.

Parameter	Value	Description
t_D	0.3 [min]	Processing time of disassembly workstation
t_M	0.44 [min]	Processing time of manufacturing workstation.
t_A	0.7 [min]	Processing time of assembly workstation.
t_{QI}	0.67 [min]	Processing time of the quality inspection workstation.
t_R	3 [min]	Processing time of repairing workstation.
N+O	600 [u]	The total number of production orders of both types.

The intertwined effects of variability and system characteristics can influence the makespan. Therefore, the following three factors have been considered:

- R/B. Ratio between the end-of-life and use of recovered products that can be repaired (R) out of those that can be disassembled (B): 1, 0.5, and 1.5.
- (DN+DO)/(R+B). Ratio of the demand of finished products DN and DO out of the recovered reparable and irreparable end-of-life and use products: 1, 0.5, and 1.5.
- DN/DO. Ratio between the demand for the premium level products of type FP^N (DN) of the basic products of type FP^O (DO): 1, 0.5, and 1.5.

For each combination of factors, eight priority rules are tested to model priority to one finished product or the other, the priority to reduce pressure on buffers, the priority in repairing strategy, or balance priority to all finished products and strategies:

Rule 1. Priority in all the workstations to the operations for FP-N and repairing activities to satisfy production orders.

Rule 2. Priority in all the workstations to the operations for FP-O and repairing activities to satisfy production orders.

Rule 3. Priority in manufacturing and assembly workstations to the operations that decrease buffer levels, while in quality inspection, FP-N has higher priority than FP-O, while repairing activities have the highest priority to satisfy production orders.

Rule 4. Priority in manufacturing and assembly workstations to the operations that decrease buffer levels, while in quality inspection, FP-O has higher priority than FP-N, while repairing activities have the highest priority to satisfy production orders.

Rule 5. Same priority in all the workstations to both production orders by serving the type with the maximum number of remaining orders. The highest priority is given to repairing activities.

Rule 6. Priority in manufacturing and assembly workstations to the operations that decrease buffer levels, balanced priority in quality inspection and maximum priority to repairing activities.

Rule 7. Same priority in all the workstations.

Rule 8. Priority in manufacturing and assembly workstations to the operations that decrease buffer levels, balanced priority in quality inspection.

Results and discussion

According to CE strategies, finished products can be repaired, reused as is or disassembled to recover components and raw materials, which, in turn, can be reused or re-manufactured.

Materials Research Proceedings 35 (2023) 250-257 https://doi.org/10.21741/9781644902714-30

However, the impact of introducing these strategies on the required time to complete a set of given production orders (makespan) is unclear, and it also depends on other system characteristics (variability in production order types and in the volumes and the quality level of available returns). Fig. 2 shows the effects of the considered characteristics on the makespan. Specifically, from left to right: the proportion of returns devoted to the disassembly out of those repaired, the proportion of production orders covered by returns, the number of production orders that can be satisfied by repaired products out of the other production order type, and the eight priority policies. The number of returns can increase the makespan from around 480 minutes (one production shift) to 640 minutes (two production shifts).

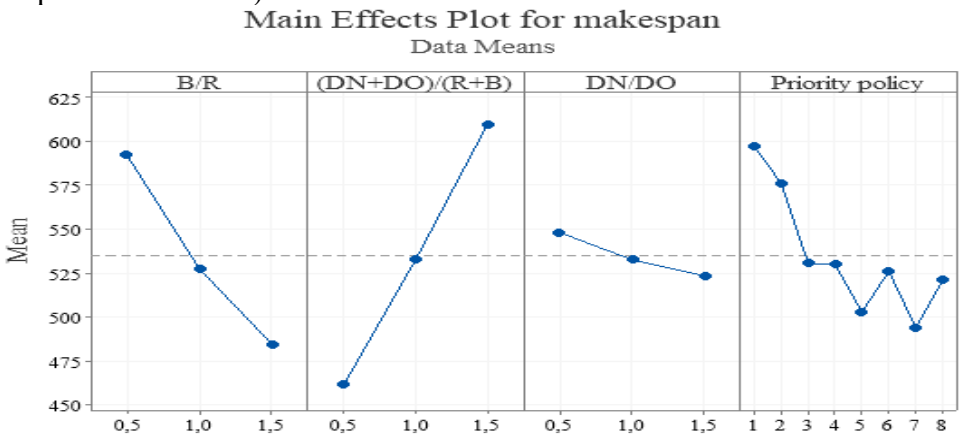

Fig. 2. The main effect graphs show the effects of the factors on the makespan.

Repairable returns have a short flow time within the system because they only require quality control and repair operations to satisfy production orders rather than disassembly, re-manufacturing, and reassembly. In fact, the presence of more production orders satisfiable through repaired returns reduces the makespan (DN/DO = 1.5). However, on average, the disassembly strategy, which provides components and resources for both product types, led to a lower makespan than the increasing repair strategy (B/R = 0.5). Priority rules that aim for a balanced satisfaction of production order types (5 and 7) lead to smaller makespan.

Fig. 3 shows the pairwise interactions on the makespan by highlighting that all the factors influence it since each level of the factor has a marker in a different level of the makespan. Also, there is an amplifying effect on the makespan between the proportion of return types and the number of returns (first frame in the top-left part of the figure). Therefore, in the case of many returns (1.5) and reparable returns larger than the others, the makespan increases (positive slope of the blue line).

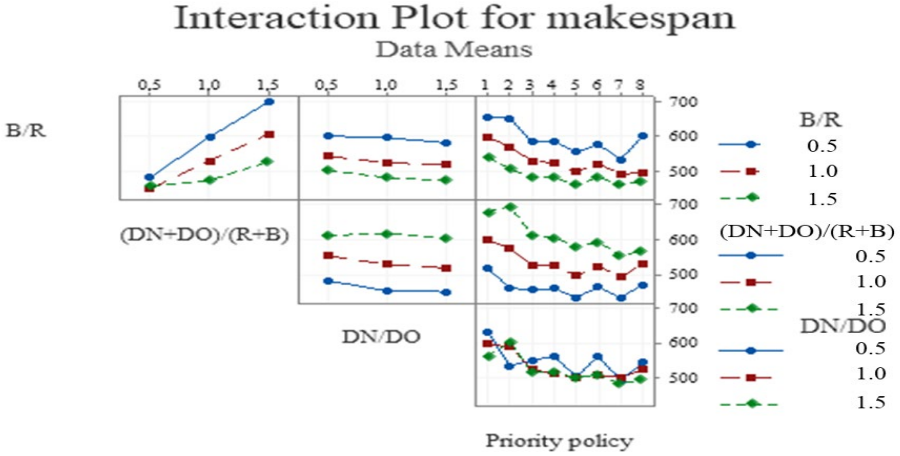

Fig. 3. The pairwise effects of the four factors influencing the makespan.

Materials Research Proceedings 35 (2023) 250-257 https://doi.org/10.21741/9781644902714-30

The pairwise interaction plot is not able to capture the real effectiveness of priority rules since it considers an average makespan of all the factors except for the two whose interaction is investigated. However, from the interaction between priority rules and production order mix (DN/DO, the last frame in the bottom), it can be seen that priority rules 1 (higher priority to FP-N) and 2 (high priority to FP-O) are not so bad how they appear in the other frames. Still, they are effective when applied during specific production order mixes. Conversely, priority rules 5 and 7 appear much more flexible since, on average, they led to a low makespan. In contrast, priority rules that focus on buffers (3, 4, 6, 8) mitigate the extreme effects of unbalanced rules towards one specific production order (3 and 4 lead to more robust and on average makespan than 1 and 2), but, when applied to the entire system they are widely influenced by return availability, returns quality, and production mix (6 and 8 lead to different result for different colour lines).

Conclusion

This paper investigates the impacts on the makespan of implementing some of the Circular Economy (CE) strategies (reuse, re-manufacturing, and repair) in a manufacturing system that exploits end-of-life and end-of-use products to recover components and satisfy the demand for new finished products. A scenario analysis evaluated through the Discrete Event Simulation model has been created to assess eight priority rules applied to the same system with different characteristics in production order types, types and numbers of returned end-of-life and use products.

Systems that include disassembly operations coupled with processing and reassembly are spreading because of the new laws and regulations regarding CE, the disruption of global supply chains, and the increasing lead times in the supply of critical raw materials. Therefore, the discussion of the results of the paper could provide technical and operational insights regarding the characteristics of manufacturing systems that foster or dampen the transition towards the manufacturing paradigm that includes CE strategies.

The results show that synchronising CE strategies (the numbers and the types of recovered products) with the production orders (numbers and types) reduces the makespan. However, CE strategies make short-term production planning more complex, and scheduling is important to improve technical performance. Furthermore, potential disequilibria between the types of returns and the types of production orders can be mitigated through priority rules. Finally, priority rules deeply affect the system performance, and they must follow the frequent changes in the system condition since they are not robust to the high uncertainty levels considered in this paper.

Future research will deepen the many critical issues related to the disassembly processes by intertwining them with the adoption of CE strategies. It will address other indicators, such as WIP and the total consumption of virgin materials. Also, other sustainable alternatives should be investigated, like industrial symbiosis.

A preliminary, introductive, and not peer-reviewed version of this paper is available at the EngrXiv database [26].

Acknowledgement

This study was carried out within the MICS (Made in Italy – Circular and Sustainable) Extended Partnership and received funding from the European Union Next-GenerationEU (PIANO NAZIONALE DI RIPRESA E RESILIENZA (PNRR) – MISSIONE 4 COMPONENTE 2, INVESTIMENTO 1.3 – D.D. 1551.11-10-2022, PE00000004). This manuscript reflects only the authors' views and opinions, neither the European Union nor the European Commission can be considered responsible for them.

References

[1] S. Rajput, S.P. Singh, Industry 4.0−Challenges to implement circular economy, Benchmarking: An International Journal 28(5) (2021) 1717-1739. https://doi.org/10.1108/BIJ-12-2018-0430

[2] P. Rosa, C. Sassanelli, A. Urbinati, D. Chiaroni, S. Terzi, Assessing relations between Circular Economy and Industry 4.0: a systematic literature review, International Journal of Production Research 58(6) (2020) 1662-1687. https://doi.org/10.1080/00207543.2019.1680896

[3] B. Ding, X. Ferras Hernandez, N. Agell Jane, Combining lean and agile manufacturing competitive advantages through Industry 4.0 technologies: an integrative approach, Production planning & control (2021) 1-17. https://doi.org/10.1080/09537287.2021.1934587

[4] J. Chen, H. Wang, R.Y. Zhong, A supply chain disruption recovery strategy considering product change under COVID-19, Journal of Manufacturing Systems 60 (2021) 920-927. https://doi.org/10.1016/j.jmsy.2021.04.004

[5] A. Coveri, C. Cozza, L. Nascia, A. Zanfei, Supply chain contagion and the role of industrial policy, Journal of Industrial and Business Economics 47 (2020) 467-482. https://doi.org/10.1007/s40812-020-00167-6

[6] S. Roscoe, E. Aktas, K.J. Petersen, H.D. Skipworth, R.B. Handfield, F. Habib, Redesigning global supply chains during compounding geopolitical disruptions: the role of supply chain logics, International Journal of Operations & Production Management (ahead-of-print) (2022). https://doi.org/10.1108/IJOPM-12-2021-0777

[7] M.C. Magnanini, W. Terkaj, T. Tolio, Robust optimisation of manufacturing systems flexibility, Procedia CIRP 96 (2021) 63-68. https://doi.org/10.1016/j.procir.2021.01.053

[8] C. Castiglione, A. Alfieri, Supply chain and eco-industrial park concurrent design, IFAC-PapersOnLine 52(13) (2019) 1313-1318. https://doi.org/10.1016/j.ifacol.2019.11.380

[9] C.O. Klingenberg, M.A. Viana Borges, J.A. Valle Antunes Jr, Industry 4.0 as a data-driven paradigm: a systematic literature review on technologies, Journal of Manufacturing Technology Management (2019). https://doi.org/10.1108/JMTM-09-2018-0325

[10] T. Tolio, A. Bernard, M. Colledani, S. Kara, G. Seliger, J. Duflou, ..., & S. Takata, Design, management and control of demanufacturing and re-manufacturing systems, CIRP Annals 66(2) (2017) 585-609. https://doi.org/10.1016/j.cirp.2017.05.001

[11] M. Colledani, O. Battaïa, A decision support system to manage the quality of End-of-Life products in disassembly systems, CIRP Annals 65(1) (2016) 41-44. https://doi.org/10.1016/j.cirp.2016.04.121

[12] A. Arianna, C. Castiglione, E. Pastore, A multi-objective tabu search algorithm for product portfolio selection: A case study in the automotive industry, Computers & Industrial Engineering 142 (2020) 106382. https://doi.org/10.1016/j.cie.2020.106382

[13] C. Castiglione, A. Alfieri, E. Pastore, Decision Support System to balance inventory in customer-driven demand, IFAC-PapersOnLine 51(11) (2018) 1499-1504. https://doi.org/10.1016/j.ifacol.2018.08.288

[14] E. Suzanne, N. Absi, V. Borodin, Towards circular economy in production planning: Challenges and opportunities, European Journal of Operational Research 287(1) (2020) 168-190. https://doi.org/10.1016/j.ejor.2020.04.043

[15] T.L. Olsen, B. Tomlin, Industry 4.0: Opportunities and challenges for operations management, Manufacturing & Service Operations Management 22(1) (2020) 113-122. https://doi.org/10.1287/msom.2019.0796

[16] A.J. Lambert, Disassembly sequencing: a survey, International Journal of Production Research, 41(16) (2003) 3721-3759. https://doi.org/10.1080/0020754031000120078

[17] W. Zhang, Y. Zheng, R. Ahmad, The integrated process planning and scheduling of flexible job-shop-type re-manufacturing systems using improved artificial bee colony algorithm, Journal of Intelligent Manufacturing (2022) 1-26. https://doi.org/10.1007/s10845-022-01969-2

[18] F. Ehm, A data-driven modeling approach for integrated disassembly planning and scheduling, Journal of Re-manufacturing, 9(2) (2019) 89-107. https://doi.org/10.1007/s13243-018-0058-6

[19] H.J. Kim, D.H. Lee, P. Xirouchakis, O.K. Kwon, A branch and bound algorithm for disassembly scheduling with assembly product structure, Journal of the Operational Research Society, 60(3) (2009) 419-430. https://doi.org/10.1057/palgrave.jors.2602568

[20] J.M. Yu, J.S. Kim, D.H. Lee, Scheduling algorithms to minimise the total family flow time for job shops with job families, International Journal of Production Research, 49(22) (2011) 6885-6903. https://doi.org/10.1080/00207543.2010.507609

[21] Y. Fu, M. Zhou, X. Guo, L. Qi, Stochastic multi-objective integrated disassembly-reprocessing-reassembly scheduling via fruit fly optimisation algorithm, Journal of Cleaner Production, 278 (2021) 123364. https://doi.org/10.1016/j.jclepro.2020.123364

[22] I. Ferretti, Multi-product economic lot scheduling problem with returns and sorting line, Systems, 8(2) (2020) 16. https://doi.org/10.3390/systems8020016

[23] V.D.R. Guide Jr, G.C. Souza, E. Van Der Laan, Performance of static priority rules for shared facilities in a re-manufacturing shop with disassembly and reassembly, European Journal of Operational Research, 164(2) (2005) 341-353. https://doi.org/10.1016/j.ejor.2003.12.015

[24] J.M. Kim, Y.D. Zhou, D.H. Lee, Priority scheduling to minimise the total tardiness for re-manufacturing systems with flow-shop-type reprocessing lines, The International Journal of Advanced Manufacturing Technology, 91(9) (2017) 3697-3708. https://doi.org/10.1007/s00170-017-0057-z

[25] C. Castiglione, E. Pastore, A. Alfieri, Technical, economic, and environmental performance assessment of manufacturing systems: the multi-layer enterprise input-output formalization method, Production Planning & Control (2022) 1-18. https://doi.org/10.1080/09537287.2022.2054743

[26] C. Castiglione, E. Pastore, A. Alfieri, Circular economy strategies at the manufacturing system scheduling level: impacts on Makespan, engrXiv. May 31, 2023. https://doi.org/10.31224/3027