POLITECNICO DI TORINO
Repository ISTITUZIONALE

Foot-Powered Machines, a Functional Taxonomy in the Age of Sustainability

Original
Foot-Powered Machines, a Functional Taxonomy in the Age of Sustainability / Franco, W., Marchis, V., Pozzi, M.. - In: MACHINES. - ISSN 2075-1702. - ELETTRONICO. - 11:9(2023). [10.3390/machines11090855]

Availability:
This version is available at: 11583/2981545 since: 2023-10-11T08:04:35Z

Publisher:
MDPI

Published
DOI:10.3390/machines11090855

Terms of use:

This article is made available under terms and conditions as specified in the corresponding bibliographic description in the repository

Publisher copyright

(Article begins on next page)

27 November 2026

machines

MDPI

Article

Foot-Powered Machines, a Functional Taxonomy in the Age of Sustainability

Walter Franco *, Vittorio Marchis and Marco Pozzi

Politecnico di Torino, Department of Mechanical and Aerospace Engineering—DIMEAS, 10129 Torino, Italy
* Correspondence: walter.franco@polito.it

Abstract: Since the Middle Ages, human-powered tools and machines have played an important role in societies. Prominent among these are pedal-powered machines, which harness the overall power from the strongest muscles in the human body. The article identifies a historical taxonomy of pedal-powered machines to provide designers with an orientation map for devising new solutions, suggesting some contexts in which today's pedal-powered machines can re-purpose ancient mechanisms to perform an innovative function. The reduction in energy consumption, the low environmental impact, and the autonomy of the process, in fact, can represent not only a technical rediscovery of engineering, but also a new way of supporting human subsistence.

Keywords: pedal; treadle; human power; applied mechanics; taxonomy; social needs

check for updates

Citation: Franco, W.; Marchis, V.; Pozzi, M. Foot-Powered Machines, a Functional Taxonomy in the Age of Sustainability. *Machines* **2023**, *11*, 855. https://doi.org/10.3390/machines11090855

Academic Editor: Antonio J. Marques Cardoso

Received: 10 July 2023
Revised: 20 August 2023
Accepted: 24 August 2023
Published: 25 August 2023

Copyright: © 2023 by the authors. Licensee MDPI, Basel, Switzerland. This article is an open access article distributed under the terms and conditions of the Creative Commons Attribution (CC BY) license (https://creativecommons.org/licenses/by/4.0/).

1. Introduction

Muscles, human and animal, are the oldest prime engine of humanity. Together with the conversion of hydraulic gravitational potential energy obtained through water wheels and wind kinetic energy achieved through windmills, they were the only sources of mechanical energy available until the advent of the steam engine. Even in rich countries, muscular power had a fundamental role in satisfying the essential needs of communities until the first half of the 20th century [1].

Muscular strength can be used to operate simple tools directly and manually, such as a hoe, sickle, scythe, hammer and sledgehammer, or it can be the driving force of a machine. In the latter case, the application of effort through the legs and feet is particularly advantageous since it involves highly powerful long muscles, which can work with an ergonomic movement and at the right speed, by choosing a suitable human–machine interface and an optimised power transmission ratio. In addition, foot-operated machines allow you to free your hands to carry out other operations [2].

For these reasons, machines moved by legs and feet have been developed since ancient times aimed at supporting a diverse range of productive and service activities of individuals and communities: threshing [3], cleaning and grinding grain, pumping water, lifting weights, operating lathes, saws, drills, cutters and spinning [4–6].

Pedal propulsion, born in distant times, still has important advantages today when applied in particular contexts.

In low-income marginal communities, human and animal physical labour represents the second source of energy after biomasses [7] and should be actually included among the renewable energy sources. In contexts where there is no energy produced by technical systems (whether they are hydraulic, steam, internal combustion or electric engines), animated engines offer the possibility of developing promising intermediate technologies, making it possible to improve the productivity of traditional solutions with low investments while preserving local labour [8]. For example, if traditional manual threshing returns 20–40 kg of grain per hour of work, threshing carried out with appropriate human-powered machines has a productivity of 100–150 kg of product per hour, with a significant productivity increase [7]. And a pedal thresher produces over 500 kg of grain/h [9], 25 times more than a

traditional solution, with an evident, concrete and positive social impact and improvement in the quality of life within the communities. Add to this the fact that cycling-derived technology is easy to implement and maintain, also thanks to the widespread diffusion of the bicycles, the possibility of finding used bikes also in development cooperation programmes, the availability of spare components and the presence of specialised networks of small workshops [10]. Similar momentary advantages obtained with the introduction of more complex machines, for example, a motorised threshing machine, are often invalidated when a breakdown occurs in contexts in which there is no maintenance network and related technical skills.

In addition, in societies where a certain threshold of energy availability and organisational complexity has been exceeded, phenomena of diminishing returns [11], increasing inequality and social inequality [12], and growing energy consumption per unit of product [13] are observed. Easterlin's paradox well describes the fact that while people on higher incomes are typically happier than their lower-income counterparts, beyond a certain level, higher incomes do not produce greater happiness over time [14]. Starting from this analysis, in recent years, there have been experiences of socioecological transition that radically question the organisation of our societies; are oriented towards a conscious and voluntary reduction in consumption, with a view to sobriety, modest living, voluntary simplicity and frugality; and are experimenting with local-scale production practices of some essential goods, including, first and foremost, food. Human-powered systems can reduce the use of fossil resources in agricultural production while remaining economically competitive if implemented on a scale that is oriented towards direct marketing [15]. In this scenario, intermediate pedal machines can have a renewed role even in developed countries, as evidenced by some cases of appropriate, open-source, shared and grassroot design [16], for example, at the service of family peasant agriculture conducted in mountainous terrains [17]. These are low-tech solutions that, in the face of limited productivity, can be operated with low human and animal power, also with the aim of putting the quality of the work at the centre, allowing the worker to realise and express themselves and recover direct contact between the work act and the high-quality product [18].

If we accept a use-centred approach to technology, we realise that the bicycle, and the machines derived from it, can therefore contribute to improving living conditions in specific situations, both in the context of poverty and in the context of the marginality of developed countries. On the other hand, since the late 1960s, more bicycles than cars have been produced every year worldwide [19], and in 2020, there was a real boom in the sale of bicycles, with increases of 25% in the main European countries compared to the previous year, testifying to the extraordinary efficiency of pedal power.

The aim of this paper is to propose a taxonomy of foot-powered machines intended to provide an orientation map for designers in the development of new concepts and prototypes of these types of machines; moreover, this work aims to bring out the importance that the design of new foot-operated devices can have in terms of the social impact and improvement on the living conditions of specific poor, marginal or socioecological transition communities.

In the article, after introducing possible classification criteria, a taxonomy of pedal-powered machines is presented; it is applied to some representative historical and modern cases to provide designers with a design tool for developing new solutions. Before the conclusions, different case studies are presented, and a discussion is therefore carried out aimed at highlighting the opportunity for designers to also develop appropriate pedal machines to serve specific communities.

This work stems from an interdisciplinary collaboration that finds in the analysis of the historical evolution of a class of machines the key to constructing a taxonomy of pedal-powered kinematic mechanisms and to analysing their functional characteristics. This will be useful especially in view of new applications in a framework of environments in which a poverty of resources requires alternative and energetically sustainable solutions, or in which communities experience processes of socioecological transition starting from

choices of sobriety, modest living, voluntary simplicity and frugality. The historical vision of the evolution of mechanisms, combined with an analysis of their structures from a purely engineering point of view, can facilitate the rebirth of ideas from the past that have floundered not because they are unfeasible and imaginative, but due to the lack of adequate materials and of a technological culture open to human needs. A critical look at patents can facilitate not only the knowledge of the complex dynamics of innovation, but also the influence of contexts on engineering tout-court.

2. Muscles over Motors and Classification Criteria of Foot-Powered Machines

The human engine continuously delivered a power output for an entire workday—the so-called critical power [20]—as a cautious first approximation, of about one watt per kilogram of live mass. An adult man weighing 70 kg can therefore develop approximately 70 W of power for about ten hours of work, which rises to about 200 W for efforts lasting one hour, up to peaks of 750 W in supplies of a few seconds (Figure 1) [21]. Different subjects have power/duration curves qualitatively like the one shown in Figure 1, but different punctual values, depending on body mass, gender and training. In general, it is observed that individually determined values of critical power, absolute and normalised to body mass, are lower in women compared with men (difference of about 20%). If the critical power of men and women is normalised to lean body mass, the difference is reduced to 15% [22].

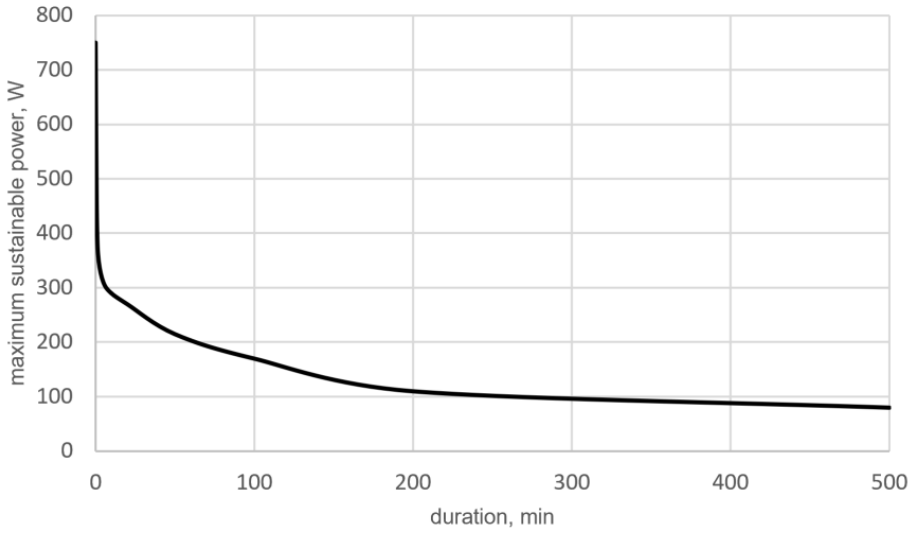

Figure 1. Human power output by pedalling, healthy men (adapted from [21]).

However, the punctual performance of animated engines depends on various factors, including the human–machine interface, the number and type of muscles involved in the work, and the type and speed of contraction of the muscles. In Figure 2, for example, it can be seen that the optimal pedalling power is generated with a frequency of around 90 rpm.

In light of these considerations, it is clear that a classification of foot-operated machines must take into consideration as criteria the parameters that can influence the performance of the human engine, namely, the type of human–machine interface, i.e., the type of input link (Figure 3); the power transmission system on which, for a given output mechanical characteristic, the force seen by the human operator depends (Figure 4); the possible presence of energy accumulation systems aimed at regulating the motion in the case of periodic regime systems (Figure 5). In addition, the kinematic chain (drive link/power transmission/output link) allows the transference and transformation of motion, according to the needs required by the machine output link (Figure 6), starting from the motion of the human–machine interface input link.

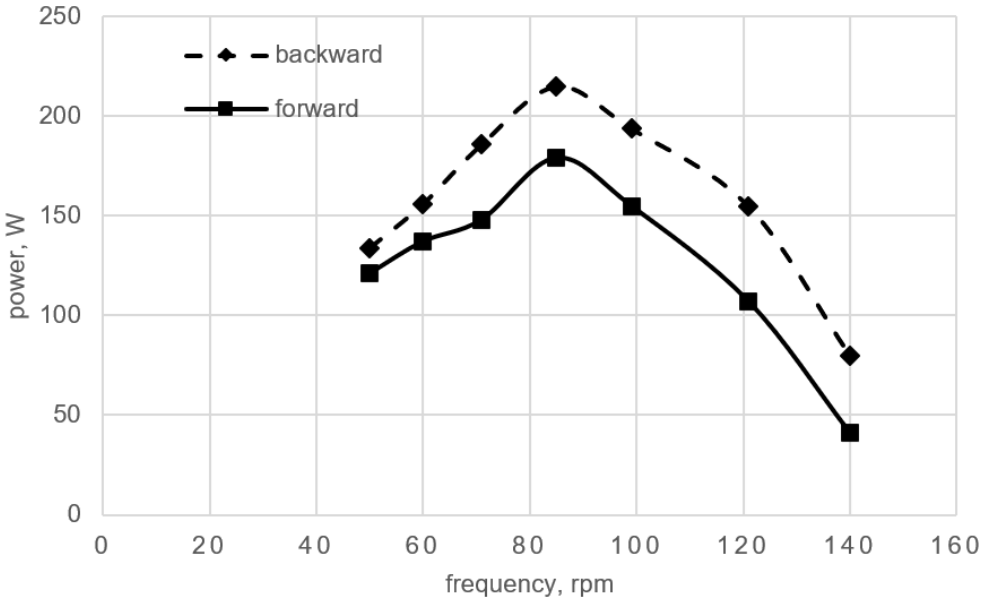

Figure 2. Maximum power produced by pedalling versus rotation speed (adapted from [21]).

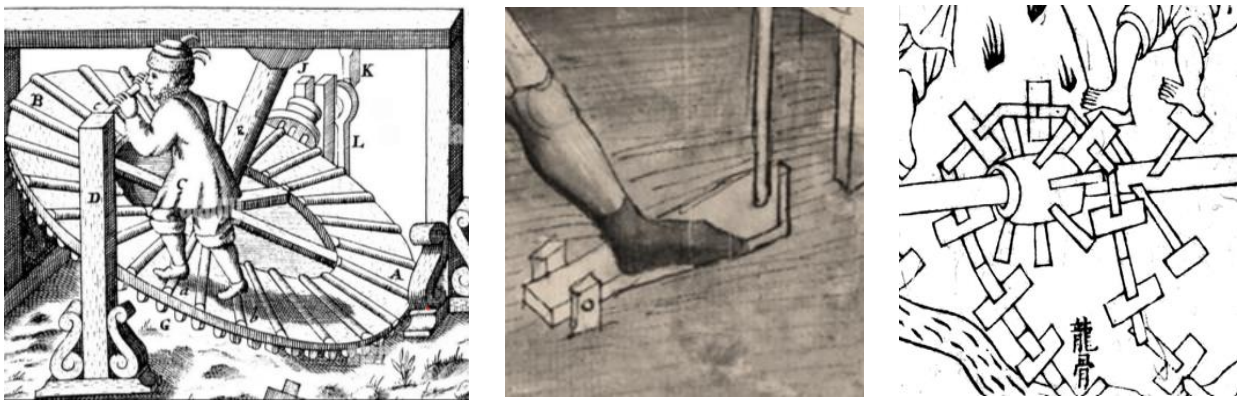

(**a**) (**b**) (**c**)

Figure 3. Functional elements for the classification of the foot-powered machines: driving links (D). (**a**) Stepping wheel (D1). (**b**) Treadle (D2). (**c**) Pedals (D3).

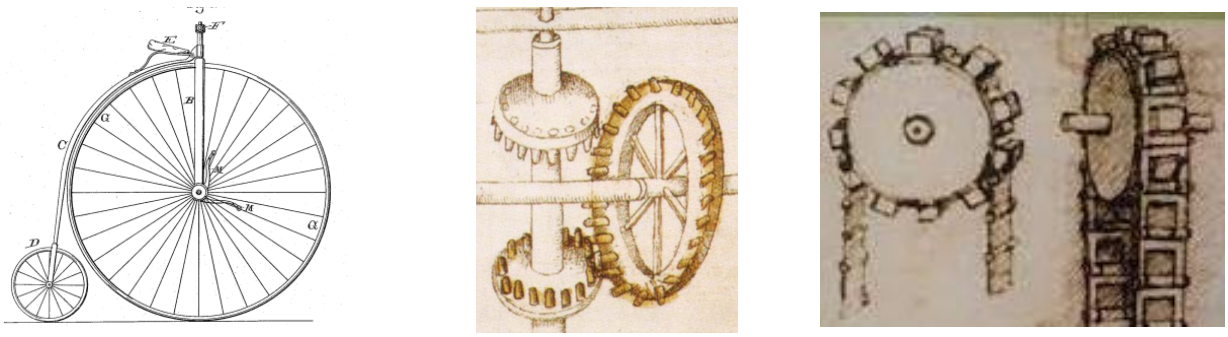

(**a**) (**b**) (**c**)

Figure 4. *Cont.*

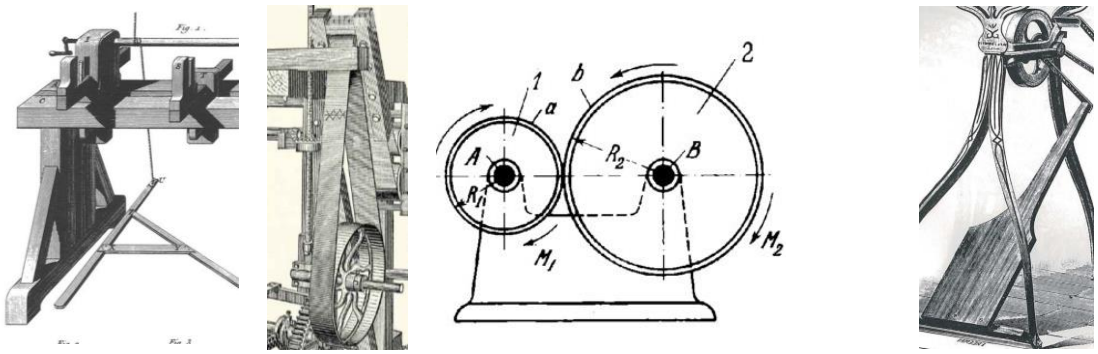

(**d**) (**e**) (**f**) (**g**)

Figure 4. Functional elements for the classification of the foot-powered machines: mechanical power transmissions (PT). (**a**) Direct drive (PT1). (**b**) Gears (PT2). (**c**) Chain drive (PT3). (**d**) Rope (PT4). (**e**) Belt drive (PT5). (**f**) Rolling cylinders (PT6). (**g**) Linkage (PT7).

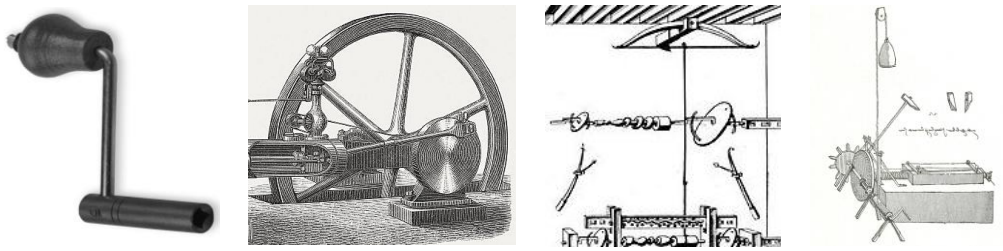

(**a**) (**b**) (**c**) (**d**)

Figure 5. Functional elements for the classification of the foot-powered machines: mechanical energy storage systems (E). (**a**) None (E1). (**b**) Flywheel (E2). (**c**) Spring (E3). (**d**) Mass (E4).

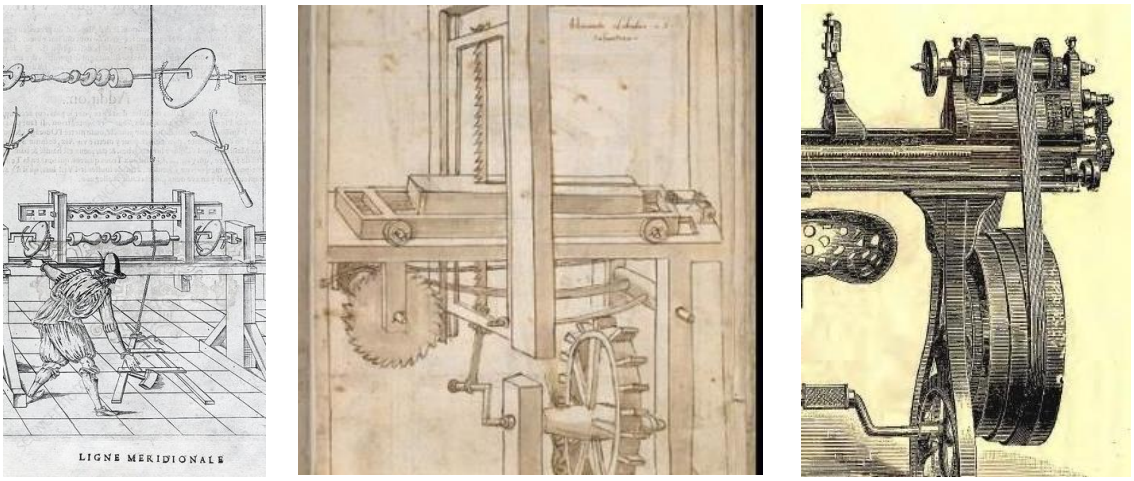

(**a**) (**b**) (**c**)

Figure 6. Functional elements for the classification of the foot-powered machines: types of output link motion (M). (**a**) Oscillating rotating (M1). (**b**) Reciprocating linear (M2). (**c**) Continuous rotary (M3).

Historically, the interface between the foot and the machine, i.e., the drive link (D), is realised according to three main strategies: the stepping wheel, the treadle and the pedals (Figure 3).

The stepping wheel (D1) or treadmill can be considered the evolution of the vertical axis winch, in which the effort is applied by the operator to a crank through walking, i.e., by extracting energy from the action of the legs. The worker actually applies on the wheel an action equal to their weight force, with the moment arm depending on its position on

it and on the type of wheel. The operator of 70 kg of mass, moving at a speed between 0.6 m/s and 0.12 m/s, generates a continuous maximum power for a whole working day of about 80 W [23]. It was used to power large loads, as in the case of the Roman crane [24], but also to operate flour mills, forge blowers and water lifters.

The treadle (D2) is a "lever worked by foot", c., 1400, from the Old English tredle "step, stair", from tredan "to tread". The treadle therefore performs an oscillatory rotation about a fixed axis, back and forth within a limited angle. Mechanically speaking, it is a rocker. In some cases, it is suitable for transmitting high-power peaks to the machine, being able to be moved through the action of the leg or even with the application of the entire weight force of an operator who works standing up, as in the case of the rod lathe. In this case, the performance of the machine depends on the interaction of the triad operator-power transmission mechanism-output link, and the design requires a complex ergonomic analysis, to be developed for the specific applications, also with the implementation of a human biomechanical model with different segments [25]. In other cases, it is used to deliver low power generated by the oscillation of the foot of the operator who, while seated, carries out precision work with their hands, such as sewing, drilling pearls, turning small objects and jewels, spinning and activating scroll saws.

The pedals (D3), on the other hand, perform a complete rotation around a fixed axis. They are therefore cranks operated with the feet. Due to the continuity of the movement, which has no toggle positions, they are extraordinarily effective in transferring the power from the animated engine to the machine. They have been in use for hundreds of years, but with the invention of the bicycle, they had a widespread diffusion thanks above all to the reduction in friction resulting from the use of ball bearings [12].

As far as the power transmission systems (PT) are concerned, we contemplate (Figure 4) the direct connection with the output link (PT1); gears (PT2); flexible power transmission elements such as the chain drive (PT3), rope drive (PT4) and belt drive (PT5); rolling cylinders (PT6); and linkages, almost always four-bar mechanisms (PT7). The gears, chain drive, rope drive and belt drive are suitable for connecting the rotating shaft of the input link and output link in different positions, to multiply or reduce the rotation speed of the output link, and to possibly change its direction. The four-bar linkage is found in double-crank, crank-rocker and double-rocker versions, and also in various disguises like the slider-crank mechanism, and the cam-follower mechanism. The four-bar linkage allows you to transmit a continuous rotary motion, switch from continuous rotary motion to oscillating rotary motion and vice versa, or transmit an oscillating rotary motion, in all cases possibly changing the transmission ratio. Slider-crank and cam-follower are used as a classic transformer of continuous rotary motion into reciprocating linear motion.

As far as mechanical energy storage systems (E) are concerned, they are sometimes not present (E1), or involve the use of the flywheel (E2) or elastic elements (E3) or masses (E4) (Figure 5).

And, finally, the types of output link motion are considered, whether oscillating rotating (M1), reciprocating linear (M2) or continuous rotary (M3) (Figure 6).

3. Proposal for a Classification of Foot-Operated Devices

With the aim of supporting the designer in the development of new solutions, the historical-functional study of machines operated with the lower limbs is of contemporary interest. Figure 7 shows some examples taken from the literature, represented in chronological order, and classified according to the criteria identified in the previous section.

If we consider the human action in the propulsion of machines, at first glance, it would seem that the use of the hand and upper limbs is preponderant and central in the development of technology starting from the most ancient times still governed by an artisanal "philosophy" or rather governed by know-how. On the contrary, the use of the lower limbs and feet is neglected; apart from the natural function of walking, it would seem extraneous to normal productive activities. However, this is not completely correct, because, for example, before the fulling machines, the *fulloni* were slaves who pounded the

wool fabrics inside stone tubs to felt them and transform them into cloth. The use of feet and legs fully enters our classification with stepping wheels, namely with large, hinged cylinders inside which an operator, unbalancing the cylinder itself, determined its rotation, thus usually activating a crane (Figure 7a).

We find foot-operated machines in the Middle Ages and even before the introduction of linkages in power transmissions. The spring pole lathe (Figure 7c), for example, transforms the oscillating rotating motion of the pedal into oscillating rotating motion of the pole through a rope transmission, a practice known from at least 8000 B.C. [5]. The same architecture is visible in the lathes of Jacques Besson's *Theatrum machinarum novum* (16th century) (Figure 7e) and in the treadle-powered lathe for making spools of thread, in *Encyclopédie, Planches* (Tabletier Cornelier) (c., 1760) (Figure 7f). In all these cases, a return mechanism of the treadle operated with the elastic potential energy accumulated in a bending spring is also used.

In other solutions, the treadle is the rocker of a four-bar linkage, in which the follower is often a crank, thus transforming the oscillating rotating motion of the input link (treadle) into a continuous rotary motion of the output link. Similar architecture is already present in some Chinese silk reeling machines of the 10th century [26] (Figure 7b), and then in Leonardo da Vinci's lathe (AD, c., 1500) (Figure 7d), in the classical sewing machine (Figure 7g,j), in generic treadle machines (Figure 7h), in the scroll-saw (Figure 7i) and in the dentist's drill (Figure 7k). In many of these cases, the power transmission is completed with a belt drive, which takes the motion from the pulley rotated by the treadle-rocker/crank four-bar mechanism to transfer it to another pulley, possibly of a different size (Figure 7b,g,h,j,k). In the case of the scroll-saw of Figure 7i, the small size and high-speed pulley G then becomes the crank of a second four-bar linkage, which transforms its continuous rotary motion into oscillating rotary motion of the parallelogram mechanism in which one member is the saw blade, which moves with translational motion. In all these examples, the rotating elements also act as a flywheel to reduce the angular velocity irregularity, a particularly interesting feature in the case of alternating loads (saw, dentist's drill).

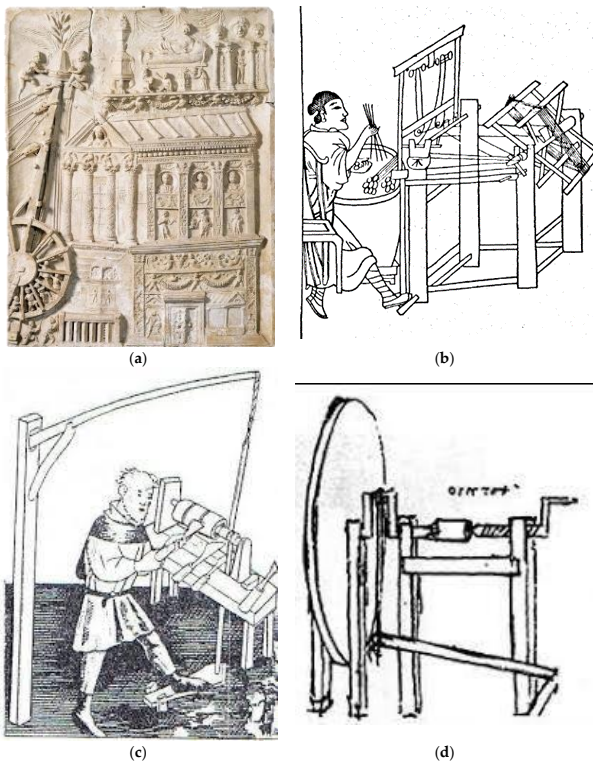

Figure 7. *Cont.*

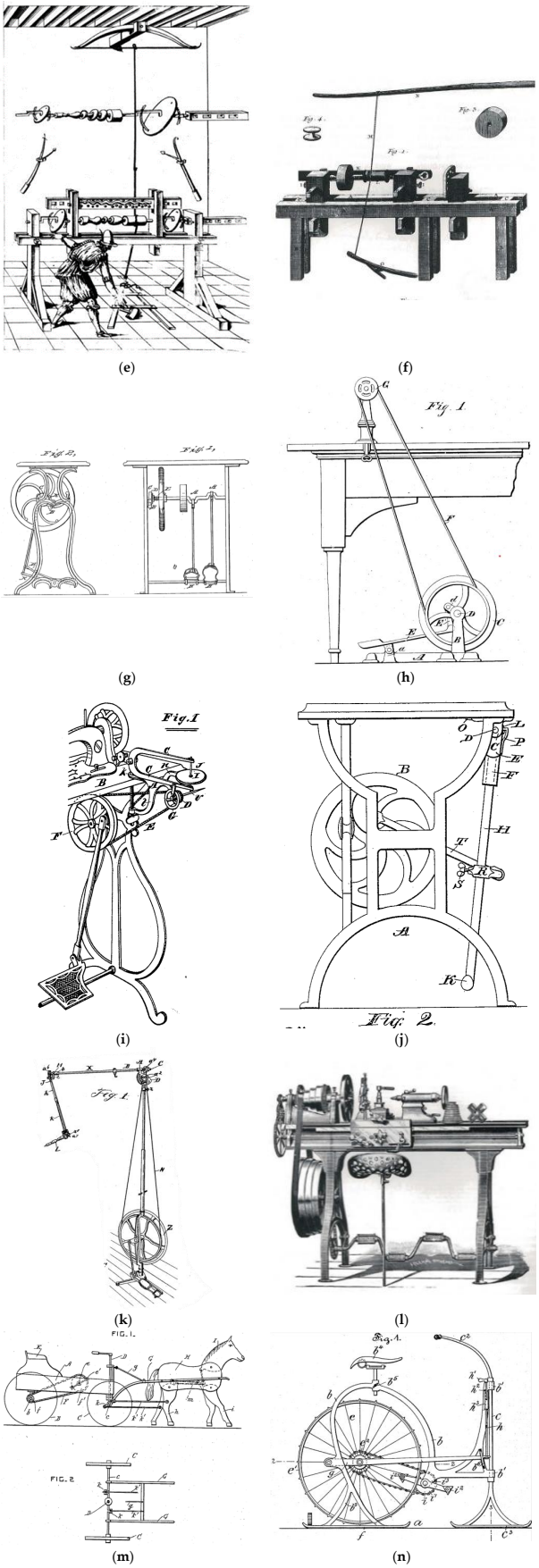

Figure 7. *Cont.*

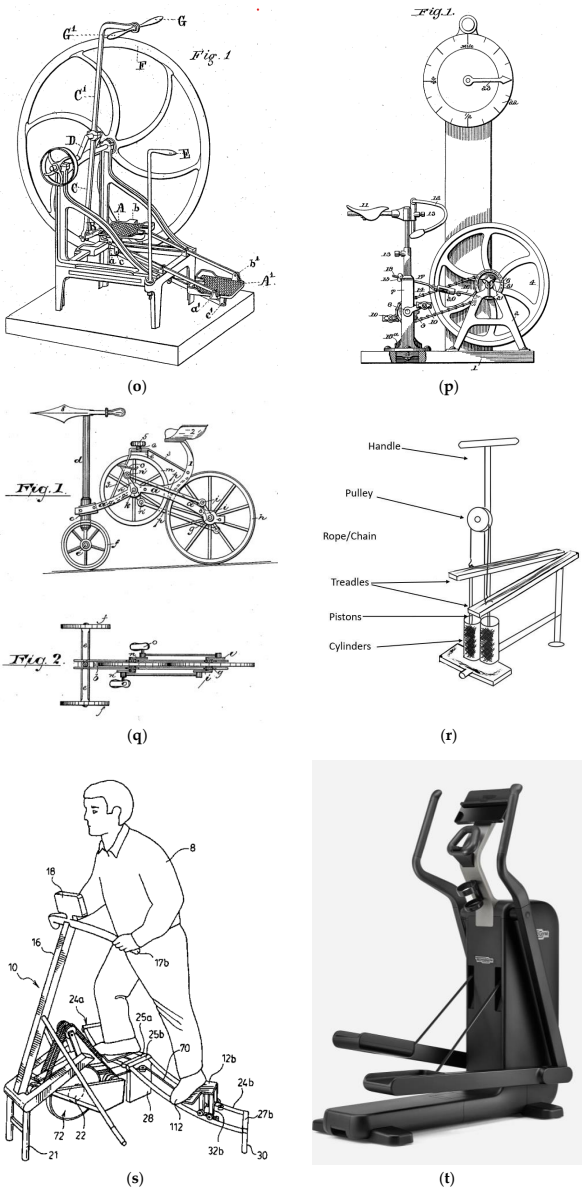

Figure 7. Foot-powered machines: proposal for a taxonomy, in historical sequence (N/A: not applicable). (**a**) D1–PT4–E1–M2. Magna rota, stepping wheel for lifting loads in a crane (second century after Christ) [27]. (**b**) D2–PT4/PT7–E1–M3. Silk threading machine (c., 1090) [28]. (**c**) D2–PT4–E3–M1. Lathe (c., 1404) [29]. (**d**) D2–PT7–E2–M3. Lathe (c., 1490) [30]. (**e**) D2–PT4–E3–M1. Lathe (1578) [31]. (**f**) D2–PT4–E3–M1. Treadle-powered lathe for making spools of thread (c., 1760) [32]. (**g**) D2–PT7–E2 -M3. Sewing machine desk (1859) [33]. (**h**) D2–PT5/PT7–E2–M3. Treadle machine (1875) [34]. (**i**) D2–PT5/–PT7–E2–M1. Scroll saw (1879) [35]. (**j**) D2–PT7–E2–M3. Sewing machine treadle (1886) [36]. (**k**) D2–PT5/PT7–E2–M3. Dentist drill (1891) [37]. (**l**) D3–PT5–E2–M3. Screw cutting engine lathe (c., 1900) [38]. (**m**) D3–PT3/PT5–E1–M3. Toy buggy (1903) [39]. (**n**) D3–PT3–E1–M3. Ice Velocipede (1892) [40]. (**o**) D2–PT7–E2–M3. Stepper motor (1877) [41]. (**p**) D3–PT3–E2–M3. Training machine (1896) [42]. (**q**) D3–PT3–E2–M3. Velocipede with connecting rod transmission (1890) [43]. (**r**) D2–PT4–E1–M2. Treadle pump (2000) [44]. (**s**) D2–PT3–E2–M2. Method of using exercise apparatus for simulating skating movement (2009) [45]. (**t**) D2–N/A–N/A–N/A. Technogyn Elliptical (2020) [46].

With the use of the pedals, the input link of the machine is a crank in which the connecting rod and the rocker are represented by the leg and the thigh of the pedaller, respectively. Foot support is facilitated by the oscillating pedal and by any attachments

that make pedalling desmodromic in a certain sense. In addition to the well-known case of the use of the pedal in the road bicycle, omitted here, we mention the screw cutting engine lathe (Figure 7l), the ice velocipede (Figure 7n) and also an ancient training machine (Figure 7p). The power transmission, in the case of the use of pedals, is often achieved with the use of a chain drive, also due to the high efficiency, close to 99% [21].

4. Appropriate Design of Modern Foot-Powered Machines

This work not only aims to provide the first example of how simple machines of the foot-powered class can become the object of a taxonomy articulated in the four levels of driving link–power transmission–energy storage–output link motion, but intends to propose, to those dealing with the design of machines, a new critical point of view at the innovation, and above all to the universe of inventions proposed by patents for which an exhaustive collection of data is increasingly available. Machines that might appear at first glance as imaginative and strange can today contain new ideas to continue a creative process even with the support of the most recent technologies (as demonstrated by the wellness machines where mechanics are increasingly interconnected with ICT).

The present work therefore does not have a historical function but aims to bring attention to the role that technological innovation has above all in the present time, in the face of the challenges of globalisation and of the great energy and environmental crises. The role of history in mechanics should not be underestimated in the construction of a modern mechanics theory and discipline. Many of the modern errors that have slowed down the development of mechanics originate from an ignorance of the past, and against this fact, the increasing attention to the historical disciplines in the polytechnic schools is emphasised. By analysing the evolution of patents, it is evident that only a critical historical design review is the solution.

Many of the inventions of the past have had moments of success that have inevitably been followed by phases of decline and abandonment, but this has certainly not been caused by their obsolescence in the face of new discoveries. An invention can often be highly innovative but does not find its sustainability in its contemporaneity, due to the lack of suitable materials or appropriate construction technologies (this is, for example, the case of Leonardo da Vinci's inventions that, at the time, were never made). Currently, if, on the one hand, pedal propulsion has found in the sports bicycle a field of experimentation of the most advanced mechanical innovations, treadle propulsion would seem forgotten or at most destined for those applications where the energy shortages and the economic poverty have forced the new reuse of ancient machines, as in the case of the treadle pump (Figure 7r).

But this is not the case, because (and this was anticipated by numerous patents from the late 1800s), for example, most of the machines for training and physical exercise, an important leading sector of the wellness industry, are re-employing the treadle in their own devices (Figure 7s,t). We would then have to examine the toy sector and, above all, educational toys (Figure 7m), where the use of elementary mechanisms can become useful tools for learning (and this has been demonstrated again by how, even among the patents of end of the 19th century, toys played an essential role).

It should also be remembered that starting from the mid-19th century, many companies, such as W.F. and John Barnes, Baldwin, and Millers Falls, developed small machines for the craftsmen of small metal and woodworking shops, farmers and laborers who lacked access to water wheels, steam engines and later electricity. Dean [5] lists about one hundred and thirty types of human-powered machines available at the end of the 19th century. Among the most curious, we mention the pedal vacuum cleaner, the crank dishwasher, the machine for making brooms, the whale blubber mincing machine, the olive pitter and the poultry delouser.

If the diffusion of electrification has given the illusion that those solutions were forever outdated and replaced by motorised devices, in reality, they can still represent important archetypes for the small artisanal and peasant production of the large world population that currently has no access to electricity: 770 million people, to which those

who have scarce economic resources in general, and therefore have difficulty in accessing other forms of energy, must be added. In some countries of the world, the segment of the population that lives in conditions of extreme poverty, on less than two dollars a day, is the majority. Examples include Chad, Haiti and Liberia (80% of the population below the poverty threshold), the Democratic Republic of Congo (70%), Niger (63%) and Guatemala (54%). And just in Guatemala, the non-governmental association Maya Pedal [47], for example, collaborates with the Massachusetts Institute of Technology (MIT) in the development of the Bicimaquinas, pedal machines for the assistance of domestic, rural and craft work, through the regeneration of abandoned bicycles: rope pumps, corn hullers, mills, blenders and washing machines. The Bicimaquinas are in all respects appropriate machines, being simple solutions, pleasant to use and easy to maintain, developed starting from the specific needs of the reference communities, using local skills, technologies and materials. Furthermore, the Bicimaquinas are intrinsically non-polluting, an excellent example of sustainable technological solutions, aimed at inclusion and social justice in contexts of poverty.

In general, numerous studies are available in the literature concerning special foot-operated machines developed to support agricultural work and the post-processing of food products in resource-poor communities. What is worth mentioning is the project that started in 2010, the long-term collaborative research program, "Farming, Food, and Fitness". In 2013, thirty-eight treadle pumps were installed in eastern Ethiopia, as a low-cost technology for small-scale irrigation; six local farmers were trained in installation and maintenance of the pumps. In mid-2015, when the researchers returned to the area, only two TPs were functioning as originally installed; the rest were improved, with better technology, by the trained farmers [48]. International Development Enterprises India (IDE) is a not-for-profit organisation with headquarters in Denver that operates in India to provide farmers with access to technologies to improve life, including treadle pumps appropriate to women farmers. The beneficial effects occurred above all for female farmers, who, by working more independently and freely, were able to increase awareness of their role in society [49]. The International Water Management Institute (IWMI), a research-for-development organisation with a global network of scientists operating in several countries, in 2007 published the research report Treadle Pump Irrigation and Poverty in Ghana [50]. This study refers specifically to the Volta and Ashanti regions of Ghana, where the treadle pump is a technology that can replace the existing rope and bucket irrigation, which requires a lot of work. In the case study, it was verified that farmers who start using treadle pups increased the size of the irrigated area and reduced the costs for the irrigation due to the non-use of fossil fuel [50]. Pedal-operated paddy threshers are used in large rice-producing countries, such as India, Bangladesh, Bhutan, Korea and in some African countries; these threshers are produced on an industrial scale locally [9]. In other countries, such as Nigeria, the output capacity of a pedal-powered cassava grinding machine is very efficient and affordable for rural farmers [51]. In Ghana, where corn production is important, trials are being developed for the production of low-cost, pedal-powered maize shellers that guarantee high performance [52]. It is also possible to study applications of human propulsion for rice milling, potentially useful in agricultural contexts without large technology possibilities [53].

Another need in poor communities is to have available small-electricity production modules, especially where there is no electricity grid, for example, for charging mobile phones [54], or multipurpose systems. Already in 1980, "Volunteers in Technical Assistance" published a study on the dynapod, a portable pedalling apparatus that consists of a stand, saddle, handlebar, pedals and sprocket wheel; the name itself testifies to the intention, because it is the union of the two Greek words for "power" and "foot". It can be used by one or two people, used for agriculture, water pumping, air compressors, small-scale industrial processes and electrical generation [55]. To increase utility, machines can be designed to perform multiple tasks. For example, the authors in [56] presented a concept of a human-powered grinding machine, which can also be used for carrying water to a

height of some meters, producing electricity, and pumping, grinding, washing and cutting. In Nigeria, some departments of Rivers State universities design and build a mechanical-pedal-powered hacksaw cutting machine, which can be used to cut wood, metals, plastic materials and PVC materials such as pipes; it is built with materials of local origin, does not require electricity, and is useful for small entrepreneurial workshops and in industrial applications in case of frequent blackouts [57].

Even in the marginal contexts of rich countries, there are communities that experiment with socioecological transition practices and, starting from the free and conscious choice of models of social and productive organisation based on sobriety, modest living, voluntary simplicity and frugality, are oriented towards machines that make use of renewable energies, among which we mention human muscular energy. L'Atelier Paysan, for example, is a cooperative that supports farmers in the design and production of machines appropriate to agroecology, with a view to technological sovereignty that passes through the re-appropriation of know-how in the name of changing the agricultural model and food currently based on the industrialisation of agriculture and that is responsible for biodiversity loss, the impoverishment of soil fertility and the production of food of poor organoleptic and nutritional quality [58]. With this aim, L'Atelier Paysan co-designs and builds alternative motorised devices, among which we mention the *Aggrozouk*, a tool carrier with pedals equipped with an electric assistance (3000 W), which allows for hitching small agricultural tools, and carrying out all kinds of small mechanised works in peasant agriculture [59].

Finally, confirming the relevance of the topic discussed here, it can be observed how, in order to satisfy the requests for designing appropriate solutions coming both from low-income countries and from the marginal areas of rich countries, courses aimed at making students aware of their role in environmental sustainability and social inclusion have recently been proposed in engineering degree programs, i.e., humanitarian engineering, in which, among others, human-powered machines are the subject of in-depth study [60].

5. Conclusions

The growing interest and awareness for the intelligent use of energy resources, not only in those countries where the typical sources of more industrialised societies are scarce, raise the need to revisit devices that the unbridled technological development has made us forget. For better organisation of the mechanics that takes human energy resources into account, this article intends to put the "foot powered machines" in a new light, because it must be remembered that these machines are also finding new applications for low-income people, in the sport and wellness industry, and for socioecological transition communities based on sobriety, modest living, voluntary simplicity and frugality.

The analysis of the historical literature of foot-powered machines has allowed us to make the first classification to be made available, as a mind map, to modern designers. Indeed, the numerous case studies presented demonstrate that this type of machine can make a contribution to satisfying some essential needs in specific contexts, particularly in conditions of poverty, such as assistance in agricultural work, water pumping, post-processing of agricultural products and improving the quality of life of these communities.

Finally, the message that this paper aims to leave is to reorganise the same teaching for sustainable engineering, including human-powered machines like one of the possible solutions.

Author Contributions: The authors contributed equally to the conceptualization, writing and review and editing of this article. All authors have read and agreed to the published version of the manuscript.

Funding: This research received no external funding.

Data Availability Statement: Not applicable.

Conflicts of Interest: The authors declare no conflict of interest.

References

1. Smil, V. *Energy and Civilization: A History*; MIT Press: Cambridge, MA, USA, 2017.
2. Wilson, D.G. Human Muscle Power History. In *Pedal Power in Work, Leisure and Transportation*; McCullagh, J.C., Ed.; Rodale Press: Emmaus, PA, USA, 1977.
3. Zakiuddin, K.S.; Sondawale, H.V.; Modak, J.P.; Ceccarelli, M. History of Human Powered Threshing Machines: A Literature Review. In *Explorations in the History of Machines and Mechanisms: Proceedings of HMM2012*; Koetsier, T., Ceccarelli, M., Eds.; Springer: Berlin/Heidelberg, Germany, 2012; pp. 431–445.
4. McCullagh, J.C. *Pedal Power in Work, Leisure and Transportation*; Rodale Press: Emmaus, PA, USA, 1977.
5. Dean, T. *The Human Powered Home: Choosing Muscles over Motors*; New Society Publishers: Gabriola Island, BC, Canada, 2008.
6. Paz, E.B.; Ceccarelli, M.; Echávarri Otero, J.; Muñoz Sanz, J.L. *A Brief Illustrated History of Machines and Mechanisms, History of Mechanism and Machine Science 10*; Springer: Berlin/Heidelberg, Germany, 2010.
7. Fuller, R.J.; Aye, L. Human and animal power—The forgotten renewables. *Renew. Energy* **2012**, *48*, 326–332. [CrossRef]
8. Schumacher, E.F. *Small Is Beautiful: A Study of Economics as if People Mattered*; Blond & Briggs: London, UK, 1973.
9. Agrawal, K.N.; Thomas, E.V.; Satapathy, K.K. Effect of thresher drive linkage design on human physiological workload of a pedal operated thresher. *CIGR J.* **2013**, *15*, 1.
10. Hazeltine, B.; Bull, C. *Appropriate Technology*; Academic Press: San Diego, CA, USA, 1999.
11. Bonaiuti, M. Are we entering the age of involuntary degrowth? Promethean technologies and declining returns of innovation. *J. Clean. Prod.* **2018**, *197*, 1800–1809. [CrossRef]
12. Illich, I. *Energy and Equity*; Marion Boyars: London, UK, 1974.
13. Franco, W.; De Piccoli, M. Intermediate Agricultural Machines Energy Efficiency: The Example of Harvesting and Threshing. *Mech. Mach. Sci.* **2021**, *91*, 533–541.
14. Easterlin, R.A.; O'Connor, K.J. The Easterlin Paradox. In *Handbook of Labor, Human Resources and Population Economics*; Zimmermann, K.F., Ed.; Springer: Berlin/Heidelberg, Germany, 2022.
15. Mulder, K.; Dube, B. Long-Term Ecological Assessment of Farming Systems (LEAFS): Comparing Human, Animal, and Small Machine Power for Fresh-Market Horticulture. *Agroecol. Sustain. Food Syst.* **2014**, *38*, 704–721. [CrossRef]
16. Farming Soul. Available online: https://www.farmingsoul.org/ (accessed on 15 June 2023).
17. Franco, W.; Barbera, F.; Bartolucci, L.; Felizia, T.; Focanti, F. Developing intermediate machines for high-land agriculture. *Dev. Eng.* **2020**, *5*, 100050. [CrossRef]
18. Franco, W.; Arrobbio, O. The Contribution of Ellul and Illich's Thought to the Design of Appropriate Machines for Communities in Socio-ecological Transition. *Mech. Mach. Sci.* **2022**, *108*, 118–126.
19. Edgerton, D. *The Shock of the Old: Technology and Global History since 1900*; Profile Books: London, UK, 2019.
20. Hill, D.W. The critical power review. *Sports Med.* **1993**, *16*, 237–254. [CrossRef] [PubMed]
21. Wilson, D.G.; Schmidt, T. *Bicycling Science*; The MIT Press: Cambridge, MA, USA, 2020.
22. Bourgois, G.; Mucci, P.; Boone, J.; Colosio, A.L.; Bourgois, J.G.; Pogliaghi, S.; Caen, K. Critical power, W′ and W′ reconstitution in women and men. *Eur. J. Appl. Physiol.* **2023**, 1–11. [CrossRef] [PubMed]
23. Garuffa, E. *Macchine Motrici ed Operatrici Idrauliche*; Hoepli: Milano, Italy, 1897.
24. Ceccarelli, M. Design Experiences for Reconstruction of an Ancient Roman Crane. In *Advances in Italian Mechanism Science: IFToMM ITALY 2020*; Mechanisms and Machine Science; Springer: Berlin/Heidelberg, Germany, 2021; Volume 91.
25. Pereira, C.; Malca, J.; Gaspar, M.C.; Ventura, E. Human Motion Analysis in Treadle Pump Devices. In *IFIP International Federation for Information Processing, Human Work Interaction Design: Designing for Human Work*; Clemmensen, T., Campos, P., Omgreen, R., Eds.; Springer: Boston, MA, USA, 2006; Volume 221, pp. 135–145.
26. Hsiao, K.; Chen, Y.; Yan, H. Structural synthesis of ancient Chinese foot-operated silk-reeling mechanism. *Front. Mech. Eng.* **2010**, *5*, 279–288. [CrossRef]
27. Marble Bas-Relief from the Mausoleum of the Haterii, Musei Vaticani. Available online: https://m.museivaticani.va/content/museivaticani-mobile/en/collezioni/musei/museo-gregoriano-profano/Mausoleo-degli-Haterii.html (accessed on 15 June 2023).
28. Gille, B. *Storia delle Tecniche*; Editori Riuniti: Roma, Italy, 1985; p. 457.
29. Gille, B. *Mendel Bruderbuch. Storia delle Tecniche*; Editori Riuniti: Roma, Italy, 1985; p. 533.
30. da Vinci, L. *Codex Atlanticus*; Folio 170. Available online: https://www.histo.cat/sabir/Leonardo%27s-Bicycle (accessed on 15 June 2023).
31. Besson, J. Theatrum Instrumentorum; Lyon, France. 1578. Available online: https://www.jnorman.com/pages/books/43709/jacques-besson/theatrum-instrumentorum-et-machinarum (accessed on 15 June 2023).
32. in *Encyclopédie*, Planches (Tabletier Cornelier).
33. Wade, W.W. Improvement in Sewing Machines. U.S. Patent No. 22,833, 1 February 1859.
34. Demorest, J.W. Improvement in Treadles. U.S. Patent No. 6,800, 14 December 1875.
35. Dearborn, C.A. Improvement in Scroll-Saws. U.S. Patent No. 220,705, 21 October 1879.
36. Smart, W.C. Sewing Machine Treadle. U.S. Patent No. 347,836, 24 August 1886.
37. Wilcox, A.A. Dental Engine. U.S. Patent No. 459,428, 15 September 1891.
38. McCullagh, J.C. *Pedal Power in Work, Leisure, and Transportation*; Rodale Press: Emmaus, PA, USA, 1977.

39. Exear Belenger. Wheeled Toy. U.S. Patent No. 721,855, 3 March 1903.
40. William Guethler e Frank Gellhaus. Ice Velocipede. U.S. Patent No. 485,844, 8 November 1892.
41. Eugène, E.G. Bozerlan, of Paris, France. Improvement in Motors. U.S. Patent No. 197,759, 4 December 1877.
42. Harry, S. Robinson, Bicycle Trainer. U.S. Patent No. 562,198, 16 June 1896.
43. Julia, A. Dutch. Velocipede. U.S. Patent No. 421,068, 11 February 1890.
44. Available online: http://www.clean-water-for-laymen.com/treadle-pumps.html (accessed on 15 June 2023).
45. TechnoGym. U.S. Patent No. 7,556,592 B2, 7 July 2009.
46. Available online: https://www.technogym.com/it-IT/product/technogym-elliptical_DC5A.html (accessed on 15 June 2023).
47. Maya Pedal. Available online: http://www.mayapedal.org/index.en (accessed on 15 June 2023).
48. Beyene, S.; Regassa, T.H.; Legesse, B.; Mamo, M.; Tadesse, T. Empowerment and Tech Adoption: Introducing the Treadle Pump Triggers Farmers' Innovation in Eastern Ethiopia. *Sustainability* **2018**, *10*, 3268. [CrossRef]
49. Prabhu, M. Marketing treadle pumps to women farmers in India. *Gend. Dev.* **1999**, *7*, 25–33. [CrossRef]
50. Adeoti, A.; Barry, B.; Namara, R.; Kamara, A.; Titiati, A. *Treadle Pump Irrigation and Poverty in Ghana*; International Water Management Institute: Colombo, Sri Lanka, 2007.
51. Tambari, S.; Benjamin, I.; Sorbari, K.; Watson Daibi, O.; Datonye, O. Design Analysis of a Pedal Powered Cassava Grinding Machine. *J. Mech. Civ. Eng.* **2014**, *11*, 34–43. [CrossRef]
52. Aggrey, O.; Beem, H. Design and fabrication of a bicycle-powered maize sheller for rural Ghanaian farmers. *IEEE Glob. Humanit. Technol. Conf.* **2020**, 1–4.
53. Pervez, M.S.; Zakiuddin, K.S. Literature Review on the Developments of Rice Milling Machines. In *Explorations in the History and Heritage of Machines and Mechanisms, Proceedings of the 2018 HMM IFToMM Symposium on History of Machines and Mechanisms, Beijing, China, September 2018*; Zhang, B., Ceccarelli, M., Eds.; Springer: Berlin/Heidelberg, Germany, 2019; pp. 98–100.
54. Giripunje, M.S.; Sakhale, C.N.; Undirwade, S.K.; Waghamare, S. Design of Pedal Driven Unit: An unconventional alternative Energy Source. *Int. J. Sci. Eng. Appl. Sci.* **2015**, *1*.
55. Weir, A. *The Dynapod: A Pedal Powe Unit*; Volunteers in Technical Assistance: Arlington, VA, USA, 1980.
56. Rahil, P.; Meet, S.; Dhaval, P.; Zenith, P.; Parthesh, P. Pedal Powered Grinder. *Int. J. Eng. Tech.* **2017**, *3*, 122–125.
57. Joseph, O.A.; Daniel Chubueze, D.; Bome Martins, A.; Chinujinim Godstime, T. Design and Fabrication of Mechanical Pedal Powered Hacksaw for Engineering Workshop Practice. *Eur. J. Adv. Eng. Technol.* **2022**, *9*, 69–78.
58. L'Atelier, P. *Reprendre la Terre aux Machines: Manifeste Pour une Autonomie Paysanne et Alimentaire*; Edition du Seuil: Paris, France, 2021.
59. L'Atelier, P. The-Aggrozouk. Available online: https://www.latelierpaysan.org/The-Aggrozouk (accessed on 15 June 2023).
60. Franco, W. Teaching Appropriate Technologies with the Applied Mechanics Approach to Sensitize Students to Their Future Role in Environmental Sustainability and Social Justice. In *International Workshop IFToMM for Sustainable Development Goals*; Springer: Cham, Switzerland, 2023; pp. 350–358. [CrossRef]

Disclaimer/Publisher's Note: The statements, opinions and data contained in all publications are solely those of the individual author(s) and contributor(s) and not of MDPI and/or the editor(s). MDPI and/or the editor(s) disclaim responsibility for any injury to people or property resulting from any ideas, methods, instructions or products referred to in the content.