2023-24-0140 Published 28 Aug 2023

Improving Computational Efficiency for Energy Management Systems in Plug-in Hybrid Electric Vehicles Using Dynamic Programming Based Controllers

Matteo Spano, Pier Giuseppe Anselma, Daniela Misul, and Nicola Amati Politecnico di Torino

Giorgio Rizzoni Center For Automotive Research

Citation: Spano, M., Anselma, P.G., Misul, D., Amati, N. et al., "Improving Computational Efficiency for Energy Management Systems in Plug-in Hybrid Electric Vehicles Using Dynamic Programming Based Controllers," SAE Technical Paper 2023-24-0140, 2023, doi:10.4271/2023-24-0140.

Received: 01 Jun 2023 Revised: 30 Jun 2023 Accepted: 30 Jun 2023

Abstract

Reducing computational time has become a critical issue in recent years, particularly in the transportation field, where the complexity of scenarios demands lightweight controllers to run large simulations and gather results to study different behaviors. This study proposes two novel formulations of the Optimal Control Problem (OCP) for the Energy Management System of a Plug-in Hybrid Electric Vehicle (PHEV) and compares their performance with a benchmark found in the literature. Dynamic Programming was chosen as the optimization algorithm to solve the OCP in a Matlab environment, using the DynaProg toolbox. The objective is to address the optimality of the fuel economy solution and computational time. In order to improve the computational efficiency of the algorithm, an existing formulation from the literature was modified, which originally utilized three control inputs. The approach involves leveraging the unique equations that describe the Input-Split Hybrid powertrain, resulting in a reduction of control inputs firstly to two and finally to one in the proposed solutions. The aforementioned formulations are referred to as 2-Controls and a 1-Control. Virtual tests were conducted to evaluate the performance of the two formulations. The simulations were carried out in various scenarios, including urban and highway driving, to ensure the versatility of the controllers. The results demonstrate that both proposed formulations achieve a reduction in computational time compared to the benchmark. The 2-Controls formulation achieved a reduction in computational time of approximately 40 times, while the 1-Control formulation achieved a remarkable reduction of approximately 850 times. These reductions in computational time were achieved while obtaining a maximum difference in fuel economy of approximately 1.5% for the 1-Control formulation with respect to the benchmark solution. Overall, this study provides valuable insights into the development of efficient and optimal controllers for PHEVs, which can be applied to various transportation scenarios. The proposed formulations reduce computational time without sacrificing the optimality of the fuel economy solution, making them a promising approach for future research in this area.

Introduction

Electrification plays an important role in tackling the issue of climate changes when it comes to the transportation field. A multitude of solutions have been proposed since the early 1990s' to include electrical components in the powertrain of a vehicle. The highest degree of electrification can be found in Battery Electric Vehicles (BEVs), where electricity is the only energy source. However, different powertrains may involve the co-existence of two (or more) energy carriers, as in Hybrid Electric Vehicles (HEVs) and Fuel Cell Hybrid Electric Vehicles (FCHEVs). Currently, the former provides a solution to the so called "charge-anxiety" [1], i.e., the psychological anxiety experienced by BEV drivers due to the limited range. HEVs indeed, can operate as conventional vehicles using the Internal Combustion Engine (ICE).

Among the main challenges that electrification has brought in the transportation sector, how to optimally control the power split between the electric motor/generator (MG) and the ICE surely attracts widespread interest. Different strategies are proposed to address the aforementioned need, the most famous include: Dynamic Programming (DP), a technique applicable to a wide field of optimal control in multi-stage decision problems [2] that exploits the Bellman's principle of optimality [3]; Pontryagin's Minimum Principle (PMP) [4] based algorithms, where global optimal solutions

can be achieved for particular scenarios by minimizing the Hamiltonian function describing the optimal control problem; Equivalent Consumption Minimization Strategy (ECMS) [5] which is based on comparing the instantaneous fuel consumption of the ICE with an equivalent consumption associated to the battery power. Some applications of these strategies are found below. Hou et al. [6] proposed an approximate PMP strategy for a Plug-in HEV that resulted in a drastic reduction of the computational time together with an improved fuel consumption (with respect to a baseline strategy). In [7], the authors proposed a PMP-based controller where the charge sustaining operation of the vehicle could be achieved when repeated driving patterns are found, such as in city buses or parcel delivery vehicles. Regarding the ECMS instead, much research has focused on tuning the equivalence factor being it crucial to achieve quasi-optimal solutions. An adaptation rule has been proposed by Musardo et al. [8] in which the equivalence factor update was related to the difference between the current value of battery State of Charge (SOC) and the set target value, achieving charge-sustaining operation and results close to the optimal. In [9] the value of equivalence factor has been adapted in real-time by leveraging information from a neural network velocity predictor. 3% reduction in fuel consumption was obtained with respect to a traditional Adaptive-ECMS. Furthermore, Villani et al. [10] proposed a hierarchical Energy Management Strategy (EMS) for a class 6 range-extender electric truck, where on the higher level a heuristic strategy decided the operating mode while on the lower level the ECMS managed the power split. For what concerns DP, it has been used in a vast number of studies to assess the global optimal solution of several HEV-related control problems. Yang et al. [11] designed a complex HEV architecture and compared it with a parallel P1-P2 HEV in terms of the fuel economy capability predicted by DP. A significant improvement was suggested to be achievable from the proposed architecture. In [12], a Stochastic version of DP has been implemented for the optimal control of a HEV such that in real-world driving conditions less electrical stress was given to the battery without affecting the fuel consumption. A vast research effort has been put on the study of complex hybrid architectures, such as the Toyota Hybrid System (THS) [13] and the most recent Stellantis eFlite® [14]. Both powertrains include a Planetary Gearset (PG) and the presence of two MGs and one ICE. Thanks to the PG, a degree of freedom is added, i.e., the ICE speed does not depend on the vehicle velocity and can be adjusted using one MG. Moreover, when it comes to the eFlite® powertrain, the presence of a one-way clutch (OWC) allows the wheels to be driven by a combination of the two EMs, thus introducing an additional degree of freedom. In the literature, several works on the energy management strategy of the THS are found. In [15] DP results were used to create a lookup table and control in real-time a Toyota Prius. Vinot et al. [16] used DP to compare the performances of an electric variable transmission (EVT) and a THS. Regarding the eFlite®, to the author's knowledge not a large number of studies are found in the literature. In a previous work [17], an algorithm was developed to diminish the computational burden of the DP while predicting similar performance in terms of fuel economy.

A research interest has been growing recently regarding the exploitation of DP as a global optimal controller to improve the performance of on-board HEV energy management systems, in terms of fuel economy [18, 19, 20]. For example, a real-time implementation of a DP-based HEV energy management system has been proposed for an NVIDIA GPU with CUDA programming in [21] The considered HEV embedded a 48V P0 powertrain architecture, where the only control variable was the mechanical power split between the ICE and the belt starter-generator. More complex electrified powertrains such as the eFlite® require a larger number of control variables to be considered in their energy management systems. The potential of the on-board implementation of DP for power split HEVs such as the eFlite® is currently restrained. One of the drawbacks of this optimization algorithm is indeed the curse of dimensionality that arises due to the exponential increase in computational complexity as the number of state and control variables grows, hindering its practical applicability.

To overcome the identified research gap, this work presents two computationally lightweight DP-based EMSs for a Plug-in Hybrid Electric minivan equipped with an eFlite® powertrain. The proposed strategies involve a reduction in control inputs without the loss of optimality in the solution in terms of fuel economy. In order to prove its robustness and quality, the controllers are compared with a benchmark DP-based algorithm for the same powertrain that considers the full set of control variables. The remaining sections are organized as follows. Firstly, a brief overview of the eFlite® powertrain is given together with the main properties of the minivan. Then, the three formulations of the DP (i.e. the baseline and the two proposed lightweight versions) are explained and a comparison of their results is brought up for different driving cycles and diverse scenarios. Finally, conclusions of this analysis are drawn and possible future works are suggested.

Methodology

In this section, the methodology used to describe the vehicle behavior and its numerical modelling are introduced. An exhaustive review of most equation is found.

Vehicle Characteristics and Modelling

A vehicle similar to the M.Y. 2022 Chrysler Pacifica Hybrid is considered here. The main vehicle specifications have been found in the Environmental Protection Agency (EPA) database [22] and in [14] and are listed in Table I.

To model the behavior of the vehicle, a quasi-static backward approach is used. In general, it exploits the knowledge of the velocity and acceleration needed to follow a drive cycle to compute the torque requested at the wheels (T_{whl}) as follows:

$$T_{whl} = T_{RL} + T_{inertia} + T_{slope} \tag{1}$$

TABLE 1 Chrysler Pacifica Specifications

Characteristics	Value	Unit
Curb weight, m	2381	kg
Road load coefficient A, A	139.7	N
Road load coefficient B, B	4.83	N/(m/s)
Road load coefficient C, C	0.50	N/(m/s)^2
Wheel radius, r_{whl}	0.37	m
Final drive ratio, τ_{diff}	3.59	-
Planetary Gearset ratio, α	3.15	-
Transfer gear ratio, τ_{TG}	2.59	-
Counter-driven gear ratio, τ_{CD}	1.01	-
Battery nominal capacity	16	kWh
ICE displacement	3.6	L
MG1 continuous peak power, kW	85	kW
MG2 continuous peak power, kW	63	kW

where T_{RL}, $T_{inertia}$, and T_{slope} are the resisting torques to overcome road loads, inertial effects, and inclination of the road, respectively calculated as in (2), (3), and (4):

$$T_{RL} = \left(A + B \cdot v + C \cdot v^2\right) \cdot r_{whl} \tag{2}$$

$$T_{inertia} = m \cdot a \cdot r_{whl} \tag{3}$$

$$T_{slope} = m \cdot g \cdot \sin\left(\beta\right) \cdot r_{whl} \tag{4}$$

Where v is the vehicle velocity, a is the acceleration, g is the gravity acceleration, and β is the road slope. Using the knowledge of T_{whl} it is possible to derive the torque that the powertrain has to supply so that the cycle velocity is followed. However, due to the presence of a Planetary Gearset and three different power sources, namely Motor/Generator 1 (MG1), Motor/Generator 2 (MG2), and the ICE, efficiently controlling the power split is far from trivial and a detailed description of the equation governing the PG is needed to better understand the choices to be made by the controller.

Powertrain Formulation

In the literature, different formulations are found for describing the behavior of a planetary gearset depending on the level of accuracy to be achieved. The lever analogy diagram [23] has been widely used due to its simplicity and the equations to correlate the different speeds and torques of carrier, sun and ring gears have been formulated by Liao et al. [24]. In general, after constructing the free body diagram for a single planetary gearset, an assessment of the forces acting on each gear can be made, leading to the formulation of relationships as depicted in the subsequent equations:

$$\omega_C = \omega_S \frac{1}{\left(1+\alpha\right)} + \omega_R \frac{\alpha}{\left(1+\alpha\right)} \tag{5}$$

$$T_S = -\frac{T_C}{\left(1+\alpha\right)} \tag{6}$$

$$T_R = -T_C \frac{\alpha}{\left(1+\alpha\right)} \tag{7}$$

$$T_R = T_S\, \alpha \tag{8}$$

Where subscripts C, S, and R stand for carrier, sun and ring gears respectively, that are the main elements in a planetary gearset. It is worth noting that one could substitute the term α with the ratio between number of teeth of ring over sun gears to obtain the same formulation as in [24]. In the eFlite® configuration, MG1 is attached to the sun gear, the ICE is attached to the carrier and the OWC allows the ICE to spin freely only in one direction (preventing negative ICE speeds). The ICE speed can therefore be decoupled by the wheels speed which allows improving the operational efficiency of this component. MG2 is instead connected to the outer ring through a transfer gear. To help the readers, a qualitative schematics of the powertrain is illustrated in Fig. 1. The torque balance at the differential input shaft is provided by the following equation:

$$T_R \cdot \tau_{CD} + T_{MG2} \cdot \tau_{TG} = \frac{T_{whl}}{\tau_{diff}} \tag{9}$$

FIGURE 1 Qualitative illustration of the eFlite® powertrain representing the planetary gearset, counter-driven gear and transfer gear. In brackets the power sources connected to the different gears.

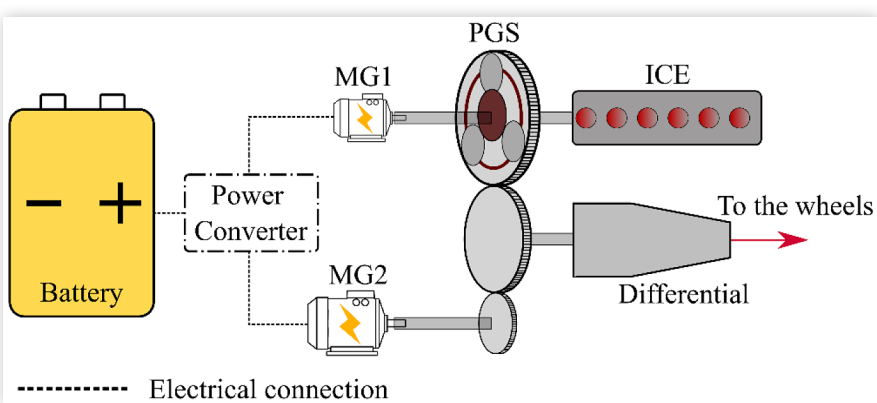

Where τ_{TG} is the transfer gear ratio between MG2 and the differential. The instantaneous value of T_R can be derived using (7) or (8) depending on hybrid electric operation or pure electric operation being set by the controller, respectively. It is also worth mentioning that the previous equations do not consider any gear meshing loss or efficiency. To this end however, 90% and 95% efficiencies have been considered in the differential and in each gear meshing, respectively. Once the torques required to meet the drive cycle are calculated, it is possible to get the fuel consumption rate using a fuel map of the ICE (as a function of speed and torque) and the battery power request, as follows:

$$P_{batt} = P_{MG1} + P_{loss,MG1} + P_{MG2} + P_{loss,MG2} + P_{aux} \tag{10}$$

Where P_{MG1} and P_{MG2} are the powers of MG1 and MG2, respectively; $P_{loss,\,MG1}$ and $P_{loss,\,MG2}$ are the power losses due to various effects (such as core losses and copper losses for example) computed through lookup tables; P_{aux} is the auxiliary power request, a constant equal to 600 W. By exploiting the knowledge of battery power request it is possible to derive the instantaneous variation in battery SOC and hence in the energy stored in the battery using:

$$I_{batt} = \frac{V_{OC} - \sqrt{V_{OC}^2 - 4R_{batt}P_{batt}}}{2\,R_{batt}} \tag{11}$$

$$\frac{dSOC}{dt} = -\frac{I_{batt}}{C_{nom}} \tag{12}$$

Where I_{batt} is the current flowing through the battery and it is computed as in (11) based on a 0-th order model of the battery. C_{nom} is the nominal capacity of the battery expressed in ampere-seconds, while V_{OC} and R_{batt} are the open-circuit voltage and the equivalent internal resistance of the battery which are both expressed as 1-D lookup tables as a function of SOC.

Dynamic Programming Formulation

In the following section, the three different formulations used to virtually simulate the fuel economy of a Chrysler Pacifica Hybrid are introduced.

Dynamic Programming is a powerful tool that solves multi-stage decision problems and provides the global optimal solution for a specified control scenario. It requires the formulation of control inputs $\boldsymbol{U}$, state variables $\boldsymbol{X}$, and a cost functional $\boldsymbol{J}$ to be minimized. Among the main drawbacks, DP is bound to run backwardly the simulation hence it needs the a priori knowledge of the entire problem. In the case of HEV controllers, it particularly requires the knowledge of the entire drive cycle in advance. The tool then starts from the end of the drive cycle and computes backwardly at each time-step the cost function for each control input at each combination of values for the state variables. The optimal solution stems from the trajectory associated to the lowest value of $\boldsymbol{J}$, and its guaranteed by the Bellman's principle.

Benchmark DP Formulation

It is true that a vast number of DP formulations can be found for a Toyota Hybrid System powertrain, however the same does not apply for the eFlite®. A brief description of the reference DP for this analysis is therefore required. Its formulation is taken from [17] and it embeds three control inputs (ICE speed, ICE torque, and MG1 torque) and two state variables (battery SOC and ICE state which is a binary variable). Regarding the control inputs:

1. ICE speed is needed to solve (5) and determine the sun speed having the ring speed imposed by the wheels. Moreover, HEV and Electric Vehicle (EV) mode can be easily described by ICE speed being different or equal to zero, respectively.
2. The ICE torque is used when operating in HEV mode to compute both MG1 torque and ring torque using (6) and (7), respectively.
3. The MG1 torque is required to determine the ring torque using (8) when operating in EV mode. In this operating conditions, the ICE is turned off and the reactive torque at the carrier is provided by the One-Way Clutch, thus allowing the combined motoring of MG1 and MG2.

For what concerns the state variables, SOC dynamics is needed to update battery characteristics. On the other hand, ICE state is used to penalize turning on and off the engine frequently over time. The cost function $\boldsymbol{J}$ to be minimized can be found below along with the mechanical and battery constraints.

$$J\left(x(t),u(t),t\right) = \int_{t_0}^{t_f} \left(\begin{array}{l} \dot{m}_f\left(x(t),u(t),t\right) + \ldots \\ \ldots + \alpha_{crank}\,\mu_{crank} \end{array} \right) dt$$

subject to:

$$\omega_{ice,min} \le \omega_{ice}(t) \le \omega_{ice,max}$$

$$\omega_{MG1,min} \le \omega_{MG1}(t) \le \omega_{MG1,max}$$

$$\omega_{MG2,min} \le \omega_{MG2}(t) \le \omega_{MG2,max}$$

$$T_{ice,min}\left(\omega_{ICE}\right) \le T_{ice}(t) \le T_{ice,max}\left(\omega_{ICE}\right)$$

$$T_{MG1,min}\left(\omega_{MG1}\right) \le T_{MG1}(t) \le T_{MG1,max}\left(\omega_{MG1}\right)$$

$$T_{MG2,min}\left(\omega_{MG2}\right) \le T_{MG2}(t) \le T_{MG2,max}\left(\omega_{MG2}\right)$$

$$\omega_{ice}\left(t = t_{EV}\right) = 0$$

$$T_{ice}\left(t = t_{EV}\right) = 0$$

$$SOC(t_{end}) = SOC(t_i)$$

As seen, the cost function mainly aims at minimizing the fuel consumption over the drive cycle, however a second term (i.e., a weighting constant factor α_{crank} and a flag μ_{crank}) was added to penalize frequent ICE cranking and improve drivability. Computational time and memory requirement increase exponentially with the number of control inputs and state variables. Therefore, two different solutions are proposed next to tackle these issues without losing the optimality of the solution and complying with the constraints above.

Proposed DP Formulations

The 2-Controls formulation decreases the number of control inputs to two by implementing a new variable, i.e., the normalized torque T_{norm}:

$$T_{norm} = \frac{T_X}{T_{X,max}(\omega_X)} \tag{13}$$

T_{norm} is a value ranging from 0 to 1 which expresses the torque of a certain power component T_X (i.e., ICE or MG1 in this study) as a function of its maximum value $T_{X,max}$. This latter value is obtained by interpolating in a 1D lookup table as a function of the instantaneous rotational speed of the component ω_X. The curve describing the maximum torque capability as a function of the angular speed is provided by the manufacturer of the power component. Then, the ICE torque and the MG1 torque afterwards can be computed as follows:

$$T_{ICE} = \begin{cases} T_{norm} \cdot T_{ICE,max}(\omega_{ICE}) & \text{if mode HEV} \\ 0 & \text{if mode EV} \end{cases} \tag{14}$$

$$T_{MG1} = \begin{cases} -T_{ICE} / (1+\alpha) & \text{if mode HEV} \\ T_{norm} \cdot T_{MG1,max}(\omega_{MG1}) & \text{if mode EV} \end{cases} \tag{15}$$

where *mode* is a binary variable detecting pure electric or hybrid electric powertrain operation. As a reminder, pure electric and hybrid electric operations differ in this work by the controlled value of ICE speed being null or greater than zero, respectively. It is worth pointing out that the torque equations of a PG already mentioned in (6) and (7) are still true, nevertheless in EV mode the OWC bears the resistive torque that allows the power to flow from the sun gear (MG1) to the ring gear. Regarding the state variables, no changes have been made to keep the same dynamics of the initial problem. The 1-Control version of DP proposed in this study involves a further reduction in the number of control inputs. The operating points of the ICE are constrained to be only on its Optimal Operating Line (OOL). The OOL defines the combinations of ICE speed and torque that for a given mechanical power result in the lowest fuel consumed (also seen as the lowest Brake Specific Fuel Consumption, BSFC). The only control input relates to the ICE power request in this case. This is in turn translated into a combination of ICE speed and torque using the OOL. The control input ranges from 0 to $P_{ICE,max}$ that is the maximum value of mechanical power deliverable buy the ICE. Setting zero as the value of ICE power corresponds to select the EV mode. Due to the possible electrical power split between MG1 and MG2 in pure electric mode, a lookup table correlating the optimal MG1 torque to the vehicle speed and the differential torque was created offline by minimizing the battery power request. The obtained map is shown in Fig. 2. As a reminder, for each controlled value of MG1 torque, the corresponding MG2 torque can be computed using (8). Finally, a summary of the diverse control inputs in the different formulations is found in Table 2 together with the grids information.

TABLE 2 Summary of DP formulations

DP version	U	Grids
Benchmark	T_{ICE}	$[0 : T_{ICE,max}], \in \mathcal{R}^{40,1}$
	ω_{ICE}	$[0, \omega_{idle} : \omega_{max}], \in \mathcal{R}^{45,1}$
	T_{MG1}	$[0 : T_{MG1,max}], \in \mathcal{R}^{40,1}$
2 - Controls	T_{norm}	$[0 : 1], \in \mathcal{R}^{40,1}$
	ω_{ICE}	$[0, \omega_{idle} : \omega_{max}], \in \mathcal{R}^{45,1}$
1 - Control	P_{ICE}	$[0 : P_{ICE,max}] \in \mathcal{R}^{50,1}$

FIGURE 2 Map of optimal MG1 torque in Nm as a function of vehicle velocity and differential torque request.

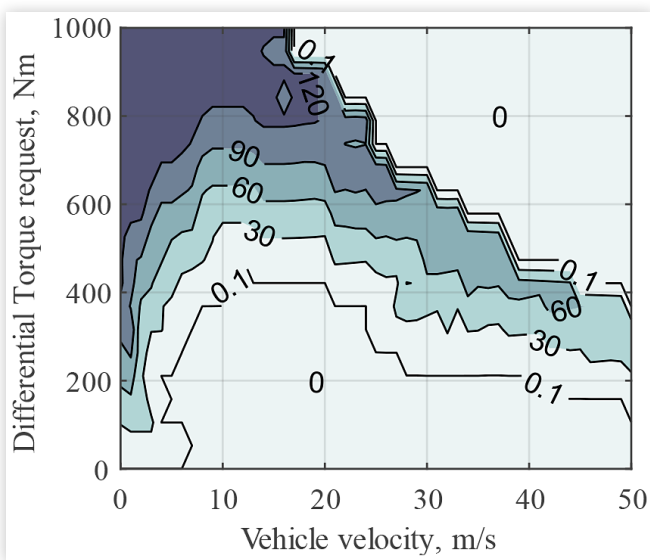

Results

The objective of this paper is to provide and validate a fast optimal controller based on DP to solve the energy management problem of a eFlite® HEV powertrain. In this section, the results obtained using each of the three different DP formulations are compared both in terms of fuel economy and computational time.

To implement the DP based controller, a MATLAB toolbox called DynaProg [25] has been chosen. The different simulations have been performed on a laptop computer equipped with Intel Core i7-9850H (2.6 GHz) and 16 GB of RAM. To ensure fairness in the comparison between the different DP versions, the same grid of state variables has been used, i.e., 301 values of SOC ranging from 10% to 40% and 2 values (1/0) for the ICE state. Four different conventional drive cycles have been considered, namely the Worldwide Harmonized Light Vehicles Test Procedure (WLTP), the EPA Urban Dynamometer Driving Schedule (UDDS), the Highway Fuel Economy Test (HWFET) and the Supplemental Federal Test Procedure (US06). It is worth mentioning that the comparison has been made on a charge sustaining strategy by constraining the final SOC of every drive mission to be equal to the initial one, i.e., 25% SOC.

The differences between the proposed 2-Controls and 1-Control DP versions and the benchmark DP formulation in terms of predicted fuel economy and computational time are reported in Table 3 and in Table 4, respectively. Both tables present not only the absolute value but also a relative change with respect to the benchmark. Comparing these two tables, it is possible to see how the 2-Controls DP formulation obtains approximately equal results with respect to the benchmark while significantly decreasing the computational time of 1 – 2 orders of magnitude. A drastic drop in computational time is obtained by the 1-Control DP, where up to 3 orders of magnitude of difference are observed in comparison with the benchmark DP formulation. Moreover, it can be noted that the fuel economy is minimally impacted by the constraint on the ICE (i.e., working on the OOL) resulting in a maximum difference of approximately 1.5%, proving the robustness of the proposed 1-Control formulation in terms of fuel economy capability for different driving scenarios.

To provide a deeper comparison and further analyze the controllers, Fig. 3 shows the ICE operating points for the three different DP versions in the WLTP. It is worth mentioning that the map of the ICE comes from a generic 3.3 L naturally-aspirated engine [26] with similar characteristics to the one found in the commercially available Chrysler Pacifica Hybrid. It can be immediately seen in Fig. 3(c) how the ICE is operating only on the OOL at any given time, whereas the other two versions show a wider area of operation. Therefore, in the 1-Control DP formulation the ICE is consistently operated at its optimal efficiency points. However, this optimized operation does not necessarily result in overall improved efficiencies of the driveline. This limitation arises from the constrained space of control variables that the optimization algorithm can explore. Specifically, when calculating the average driveline efficiency by dividing energy at the wheels by the sum of fuel and battery energies, it becomes evident that the 3-Controls DP formulation consistently achieves higher efficiency values. To provide a comprehensive analysis, Table 5 presents the average driveline efficiency values obtained from the three different DP formulations across the considered drive cycles in this study.

TABLE 3 Fuel economy results for the three DP versions.

Cycle	Benchmark, L/100km	2 – Controls, L/100km	1 – Control, L/100km
WLTP	7.67	7.72 (0.7%)	7.78 (1.4%)
UDDS	6.48	6.56 (1.2%)	6.56 (1.2%)
HWFET	6.85	6.93 (1.2%)	6.94 (1.3%)
US06	9.76	9.76 (0.0%)	9.91 (1.5%)

TABLE 4 Computational time for the three DP versions.

Cycle	Benchmark, s	2 – Controls, s	1 – Control, s
WLTP	3780.0	88.3 (÷43)	4.1 (÷945)
UDDS	2767	69.7 (÷40)	3.4 (÷813)
HWFET	1688.0	41.1 (÷41)	1.9 (÷888)
US06	1305.0	29.1 (÷45)	1.6 (÷816)

FIGURE 3 Brake Specific Fuel Consumption (BSFC, expressed in kWh/g) map of a 3.3 L engine with scattered plot of the operating points in the WLTP for (a) 3-Controls, (b) 2-Controls, and (c) 1-Control DP formulations.

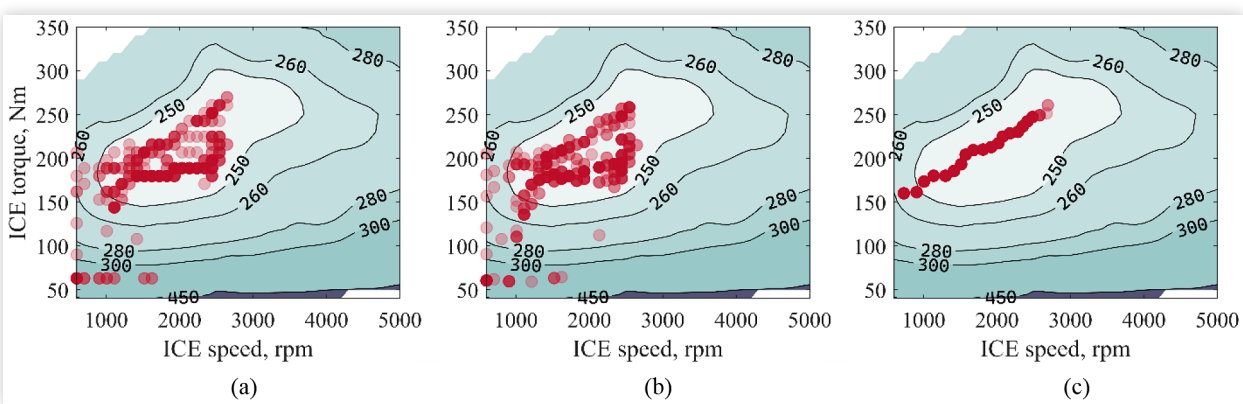

TABLE 5 Average driveline efficiency of the three DP versions.

Cycle	Benchmark, s	2 – Controls, s	1 – Control, s
WLTP	20.6%	20.5%	20.3%
UDDS	15.6%	15.4%	15.4%
HWFET	23.5%	23.3%	23.2%
US06	21.3%	21.3%	21.0%

Conclusions

The energy management of electrified vehicles is a crucial topic to ensure the optimal use of the different energy sources. Dynamic Programming has been often used in the last decades to solve any optimal control problem, with interesting performances in energy management of HEVs. Although DP can ensure the optimality of the solution in terms of fuel economy, it suffers from excessive computational burden and use of memory. In this study, two computationally lightweight DP formulations are proposed for a power split HEV powertrain with the objective of tackling these issues while ensuring the optimality of the identified control solution. To this end, two techniques are proposed for reducing the number of control variables that need consideration for solving the optimal energy management problem of the eFlite® as representative power split HEV. The robustness of the two proposed DP controllers (2-Controls and 1-Control) is tested considering different driving cycles and benchmarking with the baseline DP formulation which considers the full set of control variables. The obtained improvements in computational efficiency are substantial: on the same platform, 40-45 times and 815-945 times lower computational times are obtained by the 2-Controls and 1-Control DPs compared with the baseline formulation. Regarding the optimality of the HEV control solution in terms of fuel economy, the 2-Controls DP obtains close results in all the four drive cycles retained. The 1-Control DP limits the increase in predicted fuel consumption below 1.5% compared with the benchmark. This confirms that constraining the ICE to work on the optimal operating line does not heavily affect the fuel economy results for the eFlite® powertrain considered in this study.

Possible future work could study more complex solutions to manage the optimal electrical split between the MGs while ensuring the computational rapidness. Finally, the proposed DP formulations could be used to develop predictive HEV controllers towards improved fuel economy in real-world driving. The enhancement in computational efficiency achieved in this work could enable the practical on-board implementation in this framework.

References

1. Noel, L., Zarazua de Rubens, G., Sovacool, B.K., and Kester, J., "Fear and Loathing of Electric Vehicles: The Reactionary Rhetoric of Range Anxiety," *Energy Res. Soc. Sci.* 48 (2019): 96-107, doi:10.1016/j.erss.2018.10.001.
2. Bertsekas, D., *Dynamic Programming and Optimal Control: Volume I* (Athena Scientific, 2012), ISBN:978-1-886529-43-4
3. Bellman, R., "On the Theory of Dynamic Programming," *Proc. Natl. Acad. Sci. U. S. A.* 38, no. 8 (1952): 716-719.
4. Bittner, L., Pontryagin, L.S., Boltyanskii, V.G., Gamkrelidze, R.V., Mishechenko, E.F., The Mathematical Theory of Optimal Processes. VIII + 360 S, New York/London 1962. John Wiley & Sons, Preis 90/–," *ZAMM - J. Appl. Math. Mech. Z. Für Angew. Math. Mech.* 43(10–11):514-515, 1963, doi:10.1002/zamm.19630431023.
5. Paganelli, G., Delprat, S., Guerra, T.M., Rimaux, J., and Santin, J.J., "Equivalent Consumption Minimization Strategy for Parallel Hybrid Powertrains," *Vehicular Technology Conference. IEEE 55th Vehicular Technology Conference VTC Spring 2002, (Cat. No.02CH37367)*, 2076-2081 vol. 4, 2002, doi:10.1109/VTC.2002.1002989.
6. Hou, C., Ouyang, M., Xu, L., and Wang, H., "Approximate Pontryagin's Minimum Principle Applied to the Energy Management of Plug-In Hybrid Electric Vehicles," *Appl. Energy* 115 (2014): 174-189, doi:10.1016/j.apenergy.2013.11.002.
7. Kim, N., Jeong, J., and Zheng, C., "Adaptive Energy Management Strategy for Plug-in Hybrid Electric Vehicles with Pontryagin's Minimum Principle Based on Daily Driving Patterns," *Int. J. Precis. Eng. Manuf.-Green Technol.* 6, no. 3 (2019): 539-548, doi:10.1007/s40684-019-00046-z.
8. Musardo, C., Rizzoni, G., Guezennec, Y., and Staccia, B., "A-ECMS: An Adaptive Algorithm for Hybrid Electric Vehicle Energy Management," *Eur. J. Control* 11, no. 4 (2005): 509-524, doi:10.3166/ejc.11.509-524.
9. Sun, C., Sun, F., and He, H., "Investigating Adaptive-ECMS with Velocity Forecast Ability for Hybrid Electric Vehicles," *Appl. Energy* 185 (2017): 1644-1653, doi:10.1016/j.apenergy.2016.02.026.
10. Villani, M., Shiledar, A., Ahmed, Q., and Rizzoni, G., "Design of a Hierarchical Energy Management Strategy for a Range-Extender Electric Delivery Truck," *2021 European Control Conference (ECC)* (2021): 892-898, doi:10.23919/ECC54610.2021.9654848.
11. Yang, Y., Hu, X., Pei, H., and Peng, Z., "Comparison of Power-Split and Parallel Hybrid Powertrain Architectures with a Single Electric Machine: Dynamic Programming Approach," *Appl. Energy* 168 (2016): 683-690, doi:10.1016/j.apenergy.2016.02.023.
12. Vagg, C., Akehurst, S., Brace, C.J., and Ash, L., "Stochastic Dynamic Programming in the Real-World Control of Hybrid Electric Vehicles," *IEEE Trans. Control Syst. Technol.* 24, no. 3 (2016): 853-866, doi:10.1109/TCST.2015.2498141.
13. Muta, K., Yamazaki, M., and Tokieda, J., "Development of New-Generation Hybrid System THS II - Drastic Improvement of Power Performance and Fuel Economy," SAE Technical Paper 2004-01–0064 (2004), https://doi.org/10.4271/2004-01–0064.
14. Pittel, M. and Martin, D., "eFlite Dedicated Hybrid Transmission for Chrysler Pacifica," SAE Technical Paper 2018-01–0396 (2018), https://doi.org/10.4271/2018-01–0396.
15. Wang, R. and Lukic, S.M., "Dynamic Programming Technique in Hybrid Electric Vehicle Optimization," in *2012*

IEEE International Electric Vehicle Conference, 1-8, 2012, doi:10.1109/IEVC.2012.6183284.

16. Vinot, E., Trigui, R., Cheng, Y., Espanet, C. et al., "Improvement of an EVT-Based HEV Using Dynamic Programming," *IEEE Trans. Veh. Technol.* 63, no. 1 (2014): 40-50, doi:10.1109/TVT.2013.2271646.
17. Anselma, P.G., Rane, O., Biswas, A., Rathore, A. et al., "A Computationally Lightweight Dynamic Programming Formulation for Hybrid Electric Vehicles," SAE Technical Paper 2022-01–0671 (2022), https://doi.org/10.4271/2022-01–0671.
18. Olin, P., Aggoune, K., Tang, L., Confer, K. et al., "Reducing Fuel Consumption by Using Information from Connected and Automated Vehicle Modules to Optimize Propulsion System Control," SAE Technical Paper 2019-01–1213 (2019), https://doi.org/10.4271/2019-01–1213.
19. Gupta, S., Deshpande, S.R., Tufano, D., Canova, M. et al., "Estimation of Fuel Economy on Real-World Routes for Next-Generation Connected and Automated Hybrid Powertrains," SAE Technical Paper 2020-01–0593 (2020), https://doi.org/10.4271/2020-01–0593.
20. Deshpande, S.R., Gupta, S., Kibalama, D., Pivaro, N. et al., "In-Vehicle Test Results for Advanced Propulsion and Vehicle System Controls Using Connected and Automated Vehicle Information," *SAE Int. J. Adv. Curr. Pract. Mobil.* 3, no. 6 (2021): 2915-2930, https://doi.org/10.4271/2021-01-0430.
21. Zhu, Z., Gupta, S., Pivaro, N., Deshpande, S.R., and Canova, M., "A GPU Implementation of a Look-Ahead Optimal Controller for Eco-Driving Based on Dynamic Programming," in *2021 European Control Conference (ECC)*, 899-904, 2021, doi:10.23919/ECC54610.2021.9655197.
22. US EPA, O, "Data on Cars used for Testing Fuel Economy," Data and Tools, https://www.epa.gov/compliance-and-fuel-economy-data/data-cars-used-testing-fuel-economy, 2016.
23. Benford, H.L. and Leising, M.B., "The Lever Analogy: A New Tool in Transmission Analysis," SAE Technical Paper 810102 (1981), https://doi.org/10.4271/810102.
24. Liao, Y.G. and Chen, M.-Y., "Analysis of Multi-Speed Transmission and Electrically Continuous Variable Transmission using Lever Analogy Method for Speed Ratio Determination," *Adv. Mech. Eng.* 9, no. 8 (2017): 1687814017712948, doi:10.1177/1687814017712948.
25. Miretti, F., Misul, D., and Spessa, E., "DynaProg: Deterministic Dynamic Programming Solver for Finite Horizon Multi-Stage Decision Problems," *SoftwareX* 14 (2021): 100690, doi:10.1016/j.softx.2021.100690.
26. Dick, A., Greiner, J., Locher, A., and Jauch, F., "Optimization Potential for a State of the Art 8-Speed AT," *SAE Int. J. Passeng. Cars - Mech. Syst.* 6, no. 2 (2013): 899-907, https://doi.org/10.4271/2013-01-1272.

Contact Information

Matteo Spano
Department of Mechanical and Aerospace Engineering (DIMEAS), Center for Automotive Research and Sustainable Mobility (CARS), Politecnico di Torino, Corso Duca degli Abruzzi 24, 10129 Torino, Italy.
Center for Automotive Research, The™ Ohio State University, 930 Kinnear Road, Columbus OH, USA.
matteo.spano@polito.it

Definitions/Abbreviations

BEV - Battery electric vehicle
BSFC - Brake specific fuel consumption
DP - Dynamic programming
ECMS - Equivalent consumption minimization strategy
EMS - Energy management strategy
EPA - Environmental protection agency
EVT - Electronically variable transmission
FCHEV - Fuel cell hybrid electric vehicle
HEV - Hybrid electric vehicle
HWFET - Highway fuel economy test
ICE - Internal combustion engine
MG - Motor/generator
OCP - Optimal control problem
OOL - Optimal operating line
OWC - One-way clutch
PGS - Planetary gearset
PHEV - Plug-in hybrid electric vehicle
PMP - Pontryagin's minimum principle
SOC - State of charge
THS - Toyota hybrid system
UDDS - Urban dynamometer driving schedule
US06 - Supplemental Federal Test Procedure
WLTP - Worldwide harmonized light vehicles test procedure

© 2023 SAE International and SAE Naples Section. All rights reserved. No part of this publication may be reproduced, stored in a retrieval system, or transmitted, in any form or by any means, electronic, mechanical, photocopying, recording, or otherwise, without the prior written permission of SAE International.

Positions and opinions advanced in this work are those of the author(s) and not necessarily those of SAE International. Responsibility for the content of the work lies solely with the author(s).

ISSN 0148-7191