POLITECNICO DI TORINO
Repository ISTITUZIONALE

Construction methods

Original
Construction methods / Grasso, P., Lavagno, A., Brino, G., Cardu, M., Martinelli, D., Todaro, C., Carigi, A., Cotugno, G., Peila, D., Concilia, M., Bechter, S., Bringiotti, M., Niscastro, D., Manassero, V., Peinsitt, T., Santarelli, S. - In: Handbook on Tunnels and Underground Works: Construction - Methods, Equipment, Tools and MaterialsSTAMPA. - Leiden : Taylor & Francis, 2022. - ISBN 9781003306467. - pp. 11-216 [10.1201/9781003306467-2]

Availability:
This version is available at: 11583/2977237 since: 2024-10-25T09:57:08Z

Publisher:
Taylor & Francis

Published
DOI:10.1201/9781003306467-2

Terms of use:

This article is made available under terms and conditions as specified in the corresponding bibliographic description in the repository

Publisher copyright
Taylor and Francis postprint/Author's Accepted Manuscript (book chapters)

(Article begins on next page)

27 November 2026

Chapter 2

Construction methods

P. Grasso
Geodata Engineering spa

S. Bechter
Liebherr-Werk G.m.b.H.

M. Bringiotti
Geotunnel S.r.l.

G. Brino
Geodata Engineering spa

M. Cardu and A. Carigi
Politecnico di Torino

M. Concilia
Impresa Pizzarotti & C. SpA

G. Cotugno
Politecnico di Torino

A. Lavagno
Geodata Engineering spa

V. Manassero
Underground Consulting S.a.s.

D. Martinelli and D. Peila
Politecnico di Torino

D. Nicastro
Geotunnel S.r.l.

T. Peinsitt
Sandvik Mining and Construction G.m.b.H

S. Santarelli
Former SIG EXCO Member

C. Todaro
Politecnico di Torino

T&F Proofs – Not for Distribution

DOI: 10.1201/9781003306467-2

CONTENTS

2.1 Introduction 13
2.2 Overview on the main aspects of drill and blast in tunnelling 13
2.2.1 The compliance with the outline of the project 16
2.2.2 Types of blasts 17
2.2.2.1 Average specific consumptions 18
2.2.2.2 Rules for the layout and initiation sequence of the cut holes 20
2.2.2.3 V-cuts: calculation of the charges 21
2.2.2.4 Parallel hole cuts: calculation of the charges 22
2.3 Drilling in tunnel excavation 24
2.3.1 Jumbo for tunnel driving 27
2.3.2 Equipment, personnel and their use for the excavation of a hard rock tunnel: an example 29
2.3.2.1 General data on the work 29
2.3.2.2 Personnel and equipment 29
2.3.3 Robotizied Jumbo 30
2.4 Punctual mechanical excavation 30
2.4.1 Roadheader 33
2.4.1.1 General principles of roadheader operation 34
2.4.1.2 Continuous excavation with roadheaders 36
2.4.1.3 Roadheader components 37
2.4.1.4 Operating principles 38
2.4.1.5 Application of roadheader 40
2.4.1.6 Main operating data and their assessment 44
2.4.2 High energy impact hammer 46
2.4.2.1 Sizing the HEIH 46
2.4.2.2 Drill and split 48
2.5 Full-face TBMs for tunnelling through rock masses 50
2.5.1 Main rock TBM types 51
2.5.1.1 Open type TBMs 52
2.5.1.2 Shielded type TBMs 55
2.5.1.3 TBM main components 60
2.5.1.4 Drilling process 77
2.5.2 TBM performance prediction models 97
2.5.2.1 Analytical performance prediction models 97
2.5.2.2 Gehring model 101
2.5.2.3 Empirical performance prediction models 106
2.5.2.4 Comparative analysis of the various models 117
2.6 Soil TBM (shielded TBM) 120
2.6.1 Main types - description and trends 120
2.6.1.1 Slurry Pressure Balance TBMs (SPB) 121
2.6.1.2 Earth pressure balance TBMs 127
2.6.1.3 Multimode/hybrid shields 130
2.6.1.4 Multimode TBMs 131
2.6.1.5 Variable density hybrid machines (VD) 132
2.6.1.6 Boring cycle 135
2.6.1.7 Soil TBM main components 136

T&F Proofs – Not for Distribution

2.6.2 Limits of actual classification: the soil TBM as a process, hybridisation as the new normal 142
2.6.3 Features of the new soil machines "on demand" 142
2.6.4 How to define the specifications for the required machine? 147
2.6.5 Soil conditioning and backfilling 152
2.6.5.1 Soil conditioning 154
2.6.5.2 Backfilling grouting 161
2.7 Vertical and inclined excavation 166
2.7.1 Vertical shaft-sinking machines 175
2.8 Slurry walls and DIAPHRAGM 181
2.8.1 Introduction 181
2.8.1.1 Slurry wall technique 181
2.8.1.2 Applications of slurry walls in tunnelling 189
2.8.1.3 Characteristics, special features 190
2.8.1.4 Limitations 191
2.8.1.5 Quality assurance 191
2.8.2 Drilled piles 192
2.8.2.1 Piling with Kelly 194
2.8.2.2 Drilling with single rotary drive 196
2.8.2.3 Double rotary drilling 196
2.8.2.4 Bored pile walls 199
2.8.2.5 Secant bored pile walls 200
2.8.2.6 Quality assurance 205
Acknowledgement 206
Authorship contribution statement 206
References 206

2.1 INTRODUCTION

As widely discussed in Volume 1 of the book, the correct setting of the project and of the construction of an underground work involves predicting the potential risks and adopting the necessary mitigation interventions and excavation techniques. These interventions together define the tunnel construction techniques, and they should be chosen with reference to the considered hazard situations. It is therefore necessary that all the actors, involved in the design and in the construction of a tunnel, should have a good knowledge of the equipment and tools that can be used. Since the construction techniques influence to a great extent, the excavation advancement method, i.e. conventional method or the full-face mechanised methods and their choice is the first step of the design and construction approach of an underground work a global overview of the most frequently used techniques are provided in this chapter.

2.2 OVERVIEW ON THE MAIN ASPECTS OF DRILL AND BLAST IN TUNNELLING

Drill and blast is a common technique for tunnel driving, for both civil and mining purposes, at least for tunnel lengths lower than 3–4 km: it is a mature technology, offering a huge variety of cases to analyse (Mancini et al., 1995). Three factors are involved: explosive, rock and drilling; the main goal is to assess the mutual importance of each

T&F Proofs – Not for Distribution

of them and to look for the best solution to meet a satisfactory result. Some difficulties can be inferred due to specific drilling, the powder factor or both. The consumption of drilling, which provides for the capillary distribution of the charge in the rock mass to obtain a satisfactory particle size distribution, can be assumed as a reliable criterion based on a more restricted dispersion of the data than the explosive consumption. The effect of the cross section (whose influence on both specific consumptions is very high) has to be accounted for by defining a normal cross section v/specific consumption correlation, to be used as a reference line. To establish the quality of the results of a blast, the following parameters have to be considered: overbreak, efficiency (actual pull/design pull ratio) and HCF of the contour holes. The relationships linking these indicators to the features of the rock, the drilling system and the charge must be analysed. The cross sections can vary from a few m^3 to up to 160 m^3, either with parallel or with inclined hole cuts, and a wide range of explosives and initiation systems can be used.

The blast holes are generally divided into "functional groups": schematically, three groups can be identified (and a more detailed parting into subclasses is possible in many cases):

- *Cut holes*: they have the task of preparing favourable conditions for those that will explode later, creating or extending "free walls" where these initially lack or are insufficient.
- *Production holes*: they must break down most of the volume, taking advantage of favourable conditions created by the previous group;
- *Contour holes*: they have the purpose of outlining the contour of the wanted cavity, and therefore, they essentially have to detach what remains after the production blast holes have performed most of the work.

The sequence is shown in Figure 2.1.

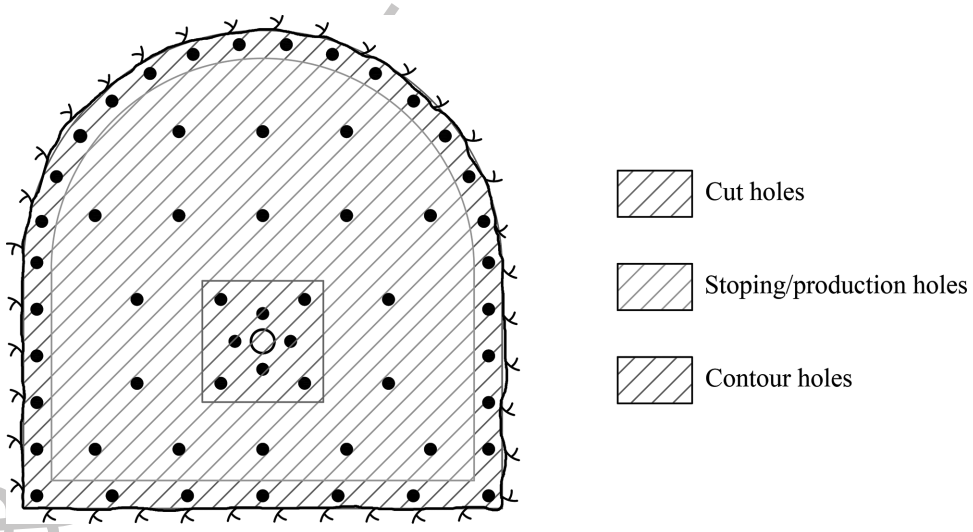

Figure 2.1 Example of a blast where the three main functional groups of blast holes are indicated (the example refers to a parallel holes cut).

T&F · Not for Distribution

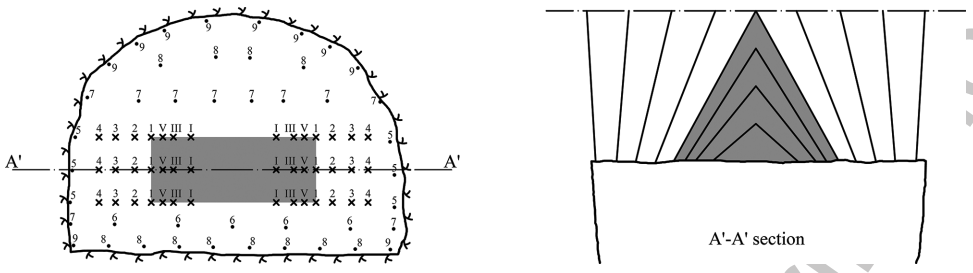

Figure 2.2 Examples of blasts for tunnelling with inclined hole cuts.

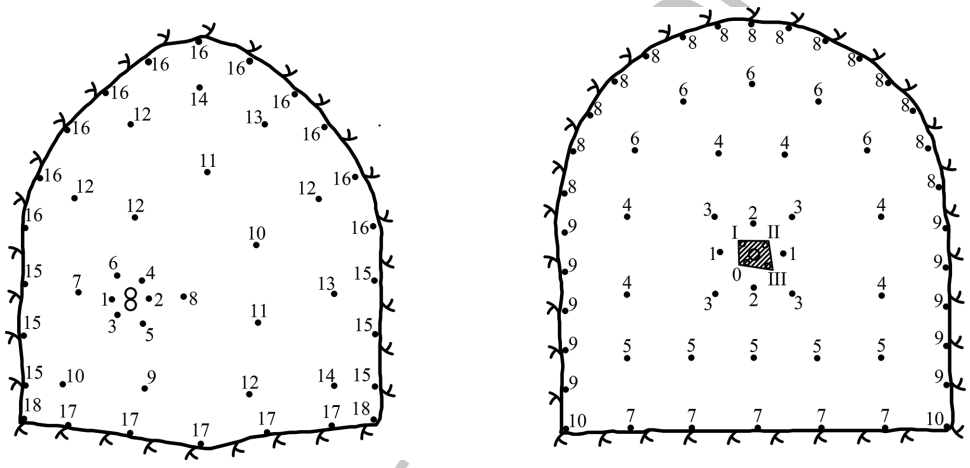

Figure 2.3 Examples of blast for tunnelling with parallel hole cuts.

The blast must be analysed in its development (decomposition of the blast), according to the sequence of detonation, which must be established to maximise the number of blast holes operating under favourable conditions (two or three free walls). As known, in tunnel excavation, there is only one free surface, delimited by negative dihedrals, and the drilling surface coincides with it. The cut, i.e. the creation of free walls that allow the "production holes" to operate in favourable conditions, can be substantially obtained according to the following two ways:

1. the cut holes are inclined with respect to the face (traditional or, simply, inclined holes cut, very commonly used, especially in the excavation of large cross sections – see Figure 2.2);
2. the cut holes are drilled parallel to each other, and the blasting is carried out towards an empty large (76–203 mm) drill hole, which acts as an opening (Figure 2.3).

The shooting plan is the executive project of the blast: it prescribes position, diameter, length and orientation of the holes, their loading (type and amount of explosives,

T&F Proofs – Distribution

initiation devices and stemming) and the timing (sequence) of the explosions; it is summarised through a graphic representation, quoted, on a suitable scale, and in a table containing the loading and timing data of the blast holes. The minimum that can be expected from a blast is the reduction of a certain volume of rock to a transportable size, with a tolerable percentage of oversize. The maximum (the "perfection") is that it reduces to a given particle size distribution all, and only, the volume that the plan has assigned to it, leaving a cavity with regular, solid walls and, obviously, corresponding to the design. It is necessary to use quantitative indicators of the result obtained, and the main points to consider are:

1. the compliance with the excavation outline of the project;
2. the state of the walls;
3. fragmentation.

In the following sections, these three points are briefly analysed.

2.2.1 The compliance with the outline of the project

The respect for the excavation contour is very important, as a failure to comply with the transversal profile (which is systematically affected by excess inaccuracy, i.e. overbreak or oversize) directly entails an increase in the cost of both support and lining works; moreover, a failure to comply with the pull (drilled length) directly implies an increase in excavation time. It is, to some extent, unavoidable that the actual cross section is greater than that expected by the project; the contour holes must necessarily diverge, albeit slightly, with respect to the excavation axis, to obtain, after blasting, a drilling surface from which a blast "equal" to the previous one can be drilled. The overbreak can be kept below 15 cm, but a much more substantial increase in the actual cross section usually comes from the contour blast holes, which break the rock even outside the theoretically predicted contour, as well as from errors in positioning and direction of the holes. To evaluate the compliance with the excavation contour, as in bench blasting, the detection of numerous transverse profiles of the excavation is necessary (more than one per blast), to obtain an actual average profile to be compared with that of the project. The ratio between the difference in area between the two sections (the designed one and the actual average detected) and the perimeter of the project represents the average thickness of the overbreak (OB) and is an effective indicator of the goodness of the result. As for the respect of the pull, the evaluation implies the measurement of the actual pull of a significant number of blasts to obtain an average value: the percentage ratio between this and the theoretical pull is the so-called blast efficiency η.

The explosion also stresses the rock that is not intended to be blasted: it can remove a portion of it, as in the case of the overbreak, but it can also simply damage or weaken it. In most cases, the rock was not intact before the blast, but it is necessary to check that it has not been too damaged compared to its original state. The presence and thickness of any damaged band adjacent to the residual wall can be detected with seismic surveys, as the sonic speed in the rock is significantly lowered by fracturing. The visual inspection, on the other hand, gives very vague indications, also because

T&F Proofs - Not for Distribution

the term of comparison is missing, that is the original "intact rock". A very useful and easy to detect indicator is the so-called Half Cast Factor (HCF), given by the ratio (percentage) between the total length of the holes' traces detectable on the residual wall after the blast and the total length of contour holes that had been charged and detonated. The HCF can be assumed as an indicator of severe (zero HCF), moderate (medium HCF) o low (high HCF).

Achieving both correct geometry and smooth contour from a blast depends on the following three factors:

- drilling accuracy (drilling system);
- suitable loading and timing (explosive and initiation systems); and
- quality of the rock.

The last factor is not under the control of the operator. However, its influence must be examined because, in order to decide whether a result is acceptable or not, a criterion is needed to establish whether, and to what extent, it can be improved. To this end, rock quality indicators can be used, not explicitly developed for these purposes, but useful for evaluating the result of an excavation. An example is the Rock Mass Rating (RMR).

2.2.2 Types of blasts

Tunnel excavation shows the highest specific consumption, both of explosives (systematically higher than 1 kg/m^3, with peaks over 10 kg/m^3), drilling (systematically higher than 1 m/m^3, with peaks over 15 m/m^3), and detonators (systematically higher than 0.3 pcs/m^3, with peaks over 15 pcs/m^3), together with the maximum complexity of the blast, which always includes at least two, more often three, functional groups of blast holes, i.e. groups that, having a completely different function, are sized according to different rules. Indeed, of the two or three functional groups mentioned above (cut, production and possible contour holes), only the first is sized according to different criteria compared to other types of blasts. The group of production holes consists of parallel or sub-parallel holes, similar to that of bench blasting and, apart from the different (much greater, with the same explosive-rock pair) powder factor assigned to it, it can be treated in the same way. The group of contour holes has almost exclusively the purpose of guiding the fracture and inducing a splitting, similarly to what happens in trench blasting; however, in tunnelling, the smoothing solution, i.e. with the contour holes detonated last, is universally preferred to the presplitting solution. An important peculiarity that makes different the contour holes for tunnelling compared to those for excavation of trenches or for profiling the walls in an open pit excavation is that in the first case they cannot be exactly parallel to each other and to the production holes, but must diverge from the excavation axis of a small angle (look out) to guarantee the preservation of the cross section.

The design of a blast round in tunnelling is mostly based on empirical rules. The aim is to remove the portion of rock mass representing the tunnel. Also, the quality of the contour is an important issue to be considered. In this context, the amount of explosive per blast cannot be considered as a whole, but mostly depends on the

T&F Proofs – Not for Distribution

functional groups; in general, it is much higher in the cut holes compared to the production and especially contour holes.

2.2.2.1 Average specific consumptions

The blast is designed to break down a volume V equal to the product of the cross section S by the pull l. For this purpose, a total amount of explosive Q is distributed, according to specific rules, in the volume V. The average specific explosive consumption of the blast, P.F., is the ratio, expressed in kg/m^3, between Q and V, i.e.:

$$\text{P.F.} = \frac{Q}{S \cdot l} \tag{2.1}$$

The values of S and l are those of the project. The blast performer cannot modify S at will, and l must be chosen based on the capability and size of the drilling machines, the type of blast, the characteristics of the mucking system, the need or not for support interventions during the excavation, or any limitations to total charges, the general organisation of the work cycle and its range is quite extensive, from 1 to 5 m, with peaks, in exceptionally favourable or experimental cases, of over 7 m. To distribute the charges in the volume V, it is necessary to drill a given number of holes, according to the requirements which ensure a good efficiency for the charges. The drilling diameters used vary within a rather narrow range, typically between 32 and 51 mm. The total length of holes L needed for a blast tends to grow as Q increases, as the overall volume of the holes must always be greater than the volume of explosive, but there is not a very close dependence between L and Q, as the holes can have different diameters, the explosives can have different densities, and the utilisation coefficient (ratio between the charged length and the total length) of the holes, as well as the coupling ratio between charge and hole (ratio between the diameter of the charge and that of the hole) can vary.

The specific consumption of holes, or specific drilling S.D., is the ratio of L to the volume that the blast must remove; it is expressed m^{-2}, or in m/m^3:

$$\text{S.D.} = \frac{L}{S \cdot l} \tag{2.2}$$

Finally, the blast consists of a certain number of blast holes, and each of them requires at least one detonator; the initiation system with detonating cord is usually avoided in tunnel excavations, as it has various drawbacks (negative oxygen balance due to the decomposition of PETN, and risks of interruption of the circuit due to the possible overlapping of strands of cord, as the detonation, which occurs at a speed of about 7,000 m/s, induces a violent shock wave): in Italy, both the electric system and the Nonel are commonly used, whereas the electronic detonators are widespread abroad, since the last 25 years, becoming very popular, especially in tunnelling. The number of blast holes, in a blast with parallel hole cuts, is given by the ratio between the drilled length and the theoretical pull; in blasts including inclined holes, it may differ, but not too much, from this ratio.

T&F Proofs — Not for Distribution

The specific consumption of detonators D.C. is the ratio between the holes' number n and the blasted volume, and is expressed in number of pieces/m^3:

$$\text{D.C.} = \frac{n}{S \cdot l} \tag{2.3}$$

Based on the previous considerations, it can be stated that the main specific consumptions can be roughly correlated, as follows:

- the specific drilling is approximately proportional to the powder factor;
- the specific consumption of detonators is approximately proportional to the ratio between the specific drilling and the pull.

It is useful to have a tool to predict, even approximately, the specific consumption to be expected from a given blast: this allows, roughly, to have an idea of the other consumptions as well. The powder factor depends on various factors, among which the three main ones are listed here in hierarchical order, i.e. from the most influential to the least influential:

1. the cross section
2. the explosive-rock pair
3. the type of blast

The cross section is the most important factor, as it has a double effect: as the cross section decreases, the percentage incidence of blast holes operating in difficult conditions increases (with few free surfaces, and the need to break the rock by shear rather than by tensile stresses) and, again, as the excavation section decreases, the need of obtaining a finely fragmented material increases, to allow it to be cleared with the equipment suitable for a small construction site. Furthermore, in the very small sections, exceeding the specific charge to achieve greater certainty of effect does not cause serious economic damage, with the same explosive-rock couple and the same type of blast.

The powder factor can vary by an entire order of magnitude, from the smallest sections (access tunnels) to the largest sections (motorway tunnels).

The explosive-rock pair has much less influence on the powder factor: in practice, the more powerful (and more expensive) explosive is used in stronger rocks. For the same section and type of blast, the change in the explosive-rock pair can lead to a variation in P.F. from 1 to 2 or a little more, judging by the case studies.

The type of blast has even less influence than the two aforementioned factors. However, there is a tendency to higher powder factors, all other things being equal, in blasts with parallel hole cuts (this negative trend is, of course, counterbalanced by other advantages). Mancini and Pelizza (1969), based on a statistical analysis of an abundant series of excavations of civil and mining tunnels, proposed a formula for the prediction of the powder factor when the type of rock, the type of explosive and the type of blast are known:

$$\text{P.F.} \cong \left(\frac{10}{S} + 0.6\right) \cdot A \cdot B \cdot C \tag{2.4}$$

T&F Proofs – Not for Distribution

where A, B and C are three numerical coefficients (tabulated) that consider the type of rock, explosive and blast (in particular, the type of opening). The formula is intended as a rough forecast tool for the powder factor and the total amount of explosive required by a blast. It can also be used as a tool for the design of a blast, if by *design* it is meant to *adapt* a blasting plan to a specific condition that has proved to be satisfactory in different situations. In this case, the design is reduced to:

- to compute (charges and timing) a suitable cut-hole scheme;
- to fill the remaining part of the section with a suitable number of production holes.

A review of more recent cases has shown that the same correlation formula remains adherent to current trends in tunnelling through drill & blast.

As for specific drilling, in the field of the most frequently used diameters (32–51 mm), the correlation formula is:

$$\text{S.D.} \cong 2.3 \cdot \left(\frac{10}{S} + 0.6 \right) \cdot A \cdot B' \tag{2.5}$$

where B' is a coefficient considering the type of explosive.

The formula tends to provide defective values in the case of blasts which, for reasons of profile accuracy, resort to smoothing (thickening and reduction of a charge of the contour holes).

2.2.2.2 *Rules for the layout and initiation sequence of the cut holes*

The pull of the blast depends on the pull of the cut, which can be considered as a small blind cut that will be enlarged, a few fractions of a second later, by the production holes. The case of V-cuts must be considered separately from that of parallel hole cuts; in the former, the pull is conditioned by the section, whereas in the latter, it is independent of it (but it is, of course, also limited by other factors). The pull, in fact, ideally corresponds to the maximum distance (in the forward direction) from the face that can be reached by the longest cut hole: if the latter is to be inclined with respect to the face, this distance is limited by the need to avoid interference between the drilling system (drilling rig and relative guide, or operator) and the tunnel wall. Before drawing a possible arrangement of the opening holes, it is therefore necessary to check, with simple geometric constructions, if they can be drilled, on the assigned excavation section, with the available drilling machine. In V-cuts, an attempt is made to assign an opening of 60°, or greater, to the central wedge. If this does not allow an adequate pull to be achieved, sharper wedges can be drilled, but the powder factor must be increased to obtain a satisfactory ejection; in general, then, it is better to switch to another type of opening.

As for the timing, micro-delays (20–30 ms) are generally used for opening, and ordinary delays (1/4, ½ s) for production holes. In openings with parallel holes, the first holes that detonate have as free surfaces the walls of one or more dummy holes parallel to them, drilled at a short distance. Some rules are mentioned that should be followed to ensure correct operation, warning, however, that many schemes in use do not respect these rules, despite working properly.

T&F Proofs – Not for Distribution

a. At the instant of the detonation of each blast hole, the empty volume available must be enough to accommodate the increase in volume (around 50%) of the rock that hole has broken;
b. The interval between the detonations should be long enough to allow the ejection of the rock from a blast hole before the next one explodes. Therefore, the delay between explosions should increase as the pull increases. An often-quoted value is 20 ms for each m of pull, which corresponds to an average ejection speed of 50 m/s;
c. The minimum distance between two blast- holes should never be less than the limit for which there is a risk of flashover: in this case, the two holes would detonate simultaneously, and therefore the timing sequence would not be respected. The limit distance depends on explosive, rock and linear charge: it is generally 20–30 cm for dynamites with a high NG content, and it is less for lower explosives.
d. The geometric conditions (distances and angles) mentioned should be respected over the whole length of the holes. At the mouth of the holes, it is easy to enforce compliance, but the holes can deviate, so the position of the centres of the bottom of the holes is defined only by the circles of uncertainty in which they may accidentally match. In practice, the condition is reduced to a limitation of the slenderness of the opening, i.e. the ratio between the pull and the average width of the opening. A practical limit of this ratio can be in the range of 8–12 as a function of the positioning accuracy and parallelism of the holes (e.g. if the average width of the opening is 40 cm, the maximum recommended pull is just over 3 m in the first case and about 5 m in the second case; if the average width of the opening is 50 cm, the maximum recommended pull is 4 m and 6 m, respectively). Higher ratios are possible with high precision guiding systems.

2.2.2.3 *V-cuts: calculation of the charges*

Only wedge openings are examined (*V*, double *V*), as they are most commonly used, showing the procedure proposed by Olofsson (1991): he considers simple or multiple *V* openings (the example Figure 2.4 is a double *V* opening) on a number of rows suitable to cover the desired cutting height *C* (usually three rows, solution to be considered standard) and a certain number of easer holes that bring the initial cavity from the original wedge shape to the parallelepiped shape. The holes are characterised by a length *H* and a burden *B*, and the opening is characterised by a height *C*, as shown in Figure 2.4.

To calculate the opening, the bottom charge (charge concentration, l_b) to be used is first calculated, which depends on the drilling diameter, the diameter of the cartridges, the density of explosive in the cartridges and the more or less complete compaction of the explosive in the hole. Olofsson provided indicative l_b values for four commercial explosives; if different explosives are used, the calculations must be adapted to the new geometry to be adopted.

Known l_b, through the nomogram in Figure 2.4 B_1, B_2 and *C* are found, which are the elements necessary to draw the blast (the acuity of the most advanced *V* is set equal to 60°). Of course, the geometric compatibility with the cross section must be checked separately.

T&F Proofs – Not for Distribution

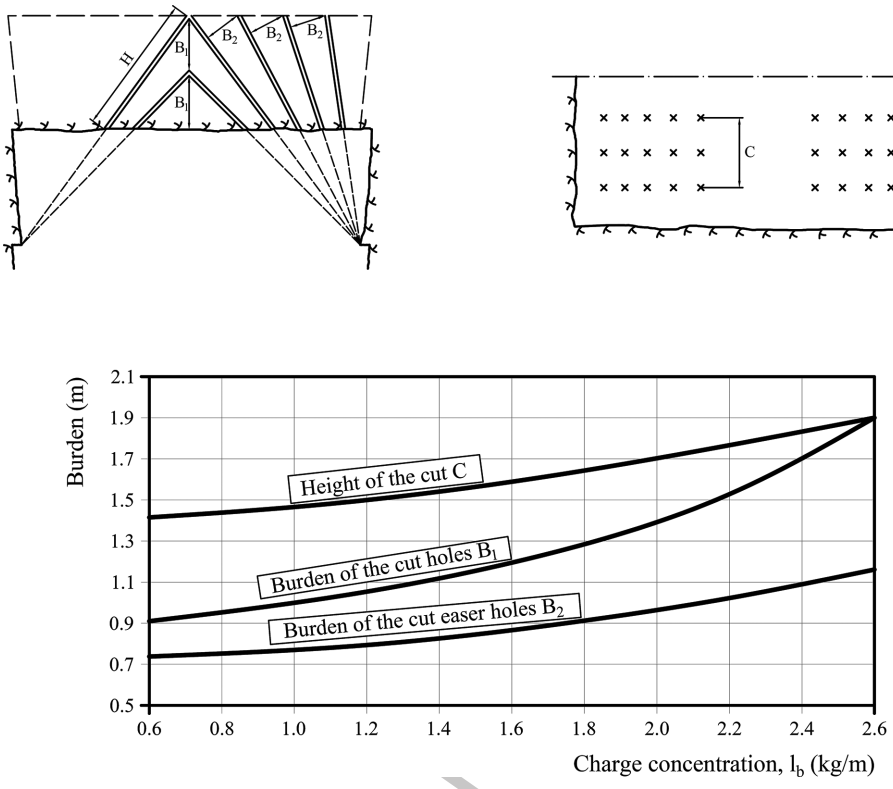

Figure 2.4 Example of calculation of V-cuts charges. The nomogram shows the relationship between the charge concentration lb and the parameters B_1, B_2 and C for different drilling diameters and different explosives. (Modified from Olofsson (1991).)

Alternatively, from the desired pull, B_1 can be calculated, assuming the most appropriate number of wedges (from 1 to 3, considering the need to distribute the explosive fairly well in the volume to be expelled), identify the suitable values of l_b and, consequently, the diameter and the height *C*.

All the holes of the cut are loaded, for the bottom of the hole, with linear charge l_b and, for the remaining part, with reduced linear charge (30%–50% l_b), leaving a stemming length equal to 0.3 B_1 for the holes of V-cut and 0.5 B_2 for the easer holes.

2.2.2.4 *Parallel hole cuts: calculation of the charges*

For the calculation of this type of cut, it is necessary to proceed first to the definition of the geometry, which is function of the diameter of the dummy hole (generally 76–200 mm). Once that this dimension is defined, the cut is proceeding by means of holes distributed on the vertexes of squares. The holes in the first square have as a free surface only the dummy hole, so the charge has to be large compared to the volume to

T&F Proofs — Not for Distribution

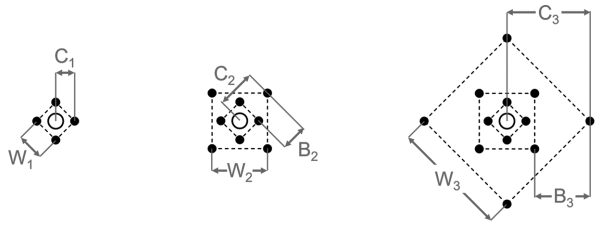

1st square	2nd square	3rd square
$C_1 = 1.5 \cdot \phi$	$B_2 = W_1$	$B_3 = W_2$
$W_1 = a \cdot \sqrt{2}$	$C_2 = 1.5 \cdot W_1$	$C_3 = 1.5 \cdot W_2$
	$W_2 = 1.5 \cdot W_1 \cdot \sqrt{2}$	$W_3 = 1.5 \cdot W_2 \cdot \sqrt{2}$

Figure 2.5 Geometry of the parallel holes cut. (Modified from Olofsson (1991).)

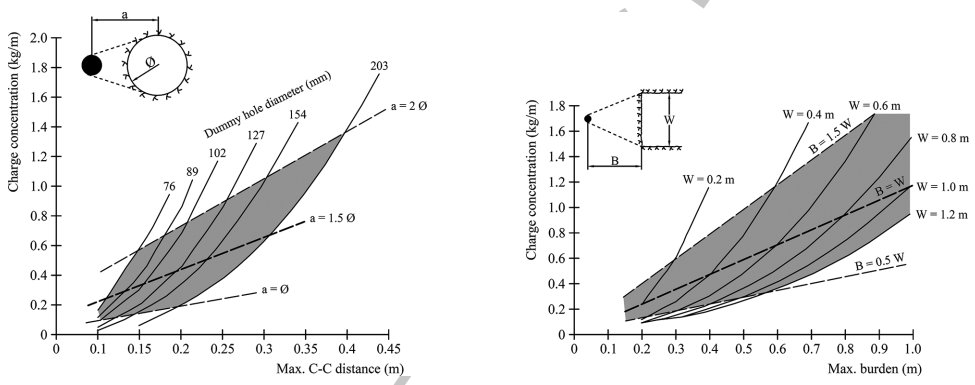

Figure 2.6 Nomogram for calculating the linear charge of the first four holes (a) and the ones following (b). (Modified from Olofsson (1991).)

be blasted. The next square is then rotated by 90° and the holes are then using as free surface the square (it is of course a prism in the third dimension). Figure 2.5 shows the principle of the squares with the distances to be used.

For the calculation of the linear charge (kg/m) of the first detonating blast holes, which have only the dummy hole as free surface, Olofsson (1991) suggested using the nomogram, as shown in Figure 2.6a. The subsequent holes benefit from a greater free surface, and the relative linear charge can be calculated from the nomogram of Figure 2.6b, as suggested by the same author.

In synthesis, the following considerations can be summarised (Cardu & Seccatore, 2016):

The size of the tunnel cross section, the specific drilling and explosive consumption are inversely proportional;
In general, designers tend to adopt longer pulls in larger sections, albeit this not being a physical constraint;

T&F Proofs / Distribution

V-shaped cuts appear to be adopted in a wider variety of applications;
Tunnel rounds with parallel hole cuts tend to be associated to longer pulls;
Tunnel rounds with parallel hole cuts tend to have a higher pull efficiency than rounds with inclined hole cuts.

The pull efficiency of the rounds is not linearly correlated to any other variable; a non-linear type of analysis can be necessary to understand how pull efficiency works thoroughly.

Based on the clear linearity of cross section and specific drilling, an average tendency of the industry was created, and the deviation from this average was defined as "difficulty of excavation": easy to excavate when lower than average, and hard to excavate when higher than average. This difficulty is associated with the types of rocks to be excavated. This can be a tool for preliminary design in pre-feasibility and feasibility studies.

2.3 DRILLING IN TUNNEL EXCAVATION

Drilling machinery is applied to tunnelling with different purposes and is governed by numerous rules and regulations. The equipment used must be able to efficiently perform the drilling tasks, and adapt to different and often changing conditions, such as different face areas, rock conditions and hole lengths. Moreover, drilling equipment must perform several tasks during different projects (see example in Figure 2.7).

A correct drilling pattern ensures the distribution of the charge in the rock, the desired blasting result and the optimum economics. Several varying factors must be considered when designing the drilling pattern: the rock drillability and blastability, the type of explosive, blast vibration restrictions and accuracy requirements of the walls. Computer programs make it easier to modify the patterns and to predict fairly accurately the effects of changes of drilling, charging, loading and production.

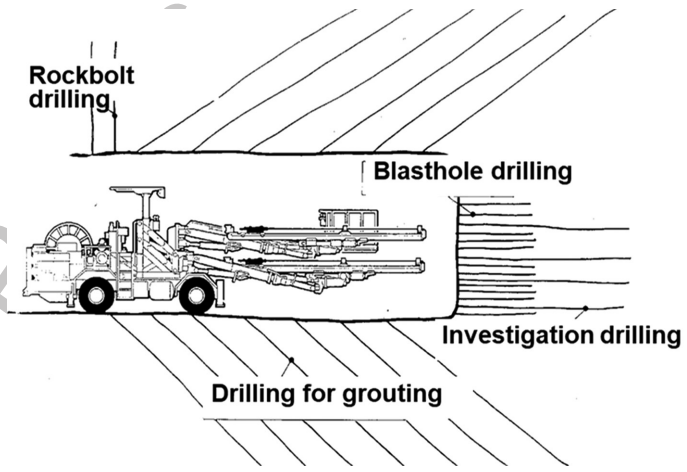

Figure 2.7 Common applications of drilling machinery to tunnelling.

T&F Proof — Not for Distribution

Drilling pattern design and tunnel drifting are based on many factors, such as tunnel dimensions and geometry; hole size; final quality requirements; geological and rock mechanical conditions; types of explosives and initiation systems; presence of water and drilling equipment available.

Computerised drilling rigs incorporate a microprocessor which is able to control the hole length; this ensures that the drill hole bottom is accurately placed, giving greater control over blasting (Hustrulid et al., 2001).

Most of the drilling machines used in tunnelling are driven by rotary percussion, as it allows to transmit greater power to the tool than the simple percussion, obviously with greater stress on the tool and a heavier machine, which is unsuitable to be manoeuvred without special mechanical positioning, guiding and thrusting systems.

Most of the rotary percussion drills in use are hydraulically operated, for reasons of specific power (power/weight ratio) and efficiency (work spent/work yield ratio). The advantage of hydraulic drilling machinery compared to pneumatic is due to the better ergonomics, easier operations, higher drilling efficiency as well as less breakdown.

The hydraulic drive, which replaces compressed air at 6–14 bar with oil, or similar fluid, brought to pressures of hundreds of bars, allows significant advantages over the pneumatic drive:

- higher power/size ratios (and therefore also power/weight) of the machine. This means that, with the same percussion and rotation power, the hydraulic machine is more compact. It is obvious that a 100 bar fluid can provide a given, predetermined, driving force, acting on a section ten times smaller than that required when the fluid pressure is only ten bar. If the average speed assumed by the piston, acting as a striking mass, is the same, the same ratio is valid for the powers;
- *Higher energy efficiency*: to bring a certain volume of almost incompressible fluid to a certain pressure, less work is spent than that which would be necessary to bring the same volume of a highly compressible fluid, such as air, to the same pressure; since the work theoretically obtainable from its re-expansion is largely lost, the hydraulic drive returns a greater percentage of the energy as useful work.

Electro-hydraulic drilling is frequently used for drilling everywhere. The electricity network includes high-voltage cables (connecting the outside power source to the underground transformer), transformers (which provide power to the underground areas), low-voltage cables (whose dimensions and voltage are based on power requirement), connecting boxes and different switch gears. The length of connecting electric cable in the drilling unit is 70–300 m and sized according to the drilling machine and site specification (Whittaker & Smith, 1987). Diesel-hydraulic drilling rigs can be selected when no electric cable lines are available at the worksite. They are generally used in construction sites for drilling tunnel portals and auxiliary tunnels; they produce undesirable gases and, in closed underground surroundings, this can become a problem when there is no proper ventilation.

The hole quality can be affected by the equipment to be used. Drifting and tunnelling tools include rods, shank adapters, couplings and bits. When selecting the tools (Figure 2.8), the most important factors to be considered are as follows: collaring accuracy, straight holes, high productivity, long service life and high penetration rate. Drill rod stiffness governs hole bending. Choosing the right combination of drill rod

T&F Proofs – Not for Distribution



Figure 2.8 A wide selection of bits is available. To achieve optimum life and grinding interval as well as penetration rate, bit design, carbide grade and button shape must be selected depending on rock conditions.

and bit is important: the drill rod and bit diameter should be as close as possible to each other, but the gap between the steel and the hole has to provide enough space for flushing of the cuttings.

Drilling is characterised by a "pure" drilling speed, a given hole diameter, on a certain rock mass and with a new tool. The recommended range of the drilling diameters in tunnelling is of about 30–51 mm, apart from the case of parallel hole cuts, where it is necessary to ream one or more dummy holes. Provided the value of the pure drilling speed for the specific case, the gross drilling speed has to be calculated; to do this, the hidden times have to be estimated: these depend on the geometric characteristics of the work as well as on the type of rock.

The main hidden times concern:

- positioning of the machine;
- start drilling (hole head);
- extraction of the rods battery when the holes are completed;
- moving the machine to the new working position;
- tool replacement (occasionally);
- stops for jams and other problems (occasionally).

If the total hidden time for each hole, L cm long, is T_m minutes and the pure drilling speed is V_p cm/min, the execution time of each hole is $(L/V_p) + T_m$ minutes and the gross drilling speed V_1 is $L/[(L/V_p) + T_m]$ cm/min; from this value, the hourly productivity is obtained.

To get the hourly productivity of blasted rock, other data are needed: the specific consumption of explosive expected, or Powder factor, PF (g/m^3 on site), the loading density, i.e. the density of the explosive in the hole (g/cm^3, o kg/dm^3, or kg/l, of hole) and the percentage of usage of the hole, i.e. the ratio between the length actually

T&F Proofs – Not for Distribution

occupied by the explosive and the total length: the hole must also contain stemming and, sometimes, bedecked.

From these data, the amount of explosive/metre of hole is first calculated: to do this, the volume of 1 m of hole is calculated, the unused portion is deduced and the residual volume is multiplied by the loading density; the result gives the grams of explosive that can be loaded per metre of hole (g/m).

This value, divided by the PF, gives the volume of blasted rock per metre of hole (m^3/m).

Finally, to obtain the hourly productivity, in m^3 of rock in place, of the drilling rig, this value (m^3/m) must be multiplied by the gross drilling speed in m/h.

2.3.1 Jumbo for tunnel driving

In organising blasts for tunnel excavation, drilling times must be reduced to a minimum: in the work shift, a limited time is assigned to this operation (generally, a few hours) and, if it cannot be completed within the foreseen time, the shift will be heavily conditioned; it is not possible to drill while mucking nor while loading the holes. On the other hand, the excavation of tunnels requires a high drilling density. The number of blast holes is very big: a few dozens in small section tunnels and hundreds in large section tunnels. Jumbo tunnelling drilling rigs are designed to drill blast holes in underground mining and tunnelling. They are applicable for hard rocks mine tunnelling operation either in small section tunnel or in big section tunnel.

The jumbo is a vehicle (wheeled or tracked, generally self-propelled) on which one or more hydraulic arms are mounted (even a dozen, but more often from 2 to 8) which allows to position the driving and advancement systems of as many drilling rigs, in order to drill holes in the positions and directions required by the blast geometry (Figure 2.9). The strategy followed to increase the productivity is aimed at agility: the machine quickly positions the drilling rigs, when the work is completed it minimises its transversal size by collecting the arms "as the octopus does" and moves away; after clearing, it returns to the face and repositions itself to prepare the next blast. It also focuses on the centralisation of controls: a single operator can control the positioning, start, stop, movement of many drilling rigs from a fixed position (from an air-conditioned cabin) and, of course, the focus is on increasing the single productivity of the drilling rigs.

In the excavation of large (by section and by length) tunnels, hybrid solutions are also successful: bridge cranes on which hydraulic arms are mounted for positioning the drill rigs, and portal jumbo. The bridge crane solution has the advantage of providing work surfaces that are very useful for other operations related to excavation: wall bolting, arrangement of the metal meshes to be incorporated in shotcrete, arrangement of ribs and other consolidation and static support works. The classic jumbo, however, remains a versatile machine, not specialised on a fixed section of excavation.

It is characterised, in addition to the power, weight, drive, number and type of arms and drill rigs, by three important geometric data: the transverse overall dimensions, in width and height, which defines the minimum tunnel section in which it can work; the minimum section of excavation that it can drill (generally, with parallel holes), as well as the maximum section of excavation (generally, with inclined holes).

T&F Proofs – Not for Distribution

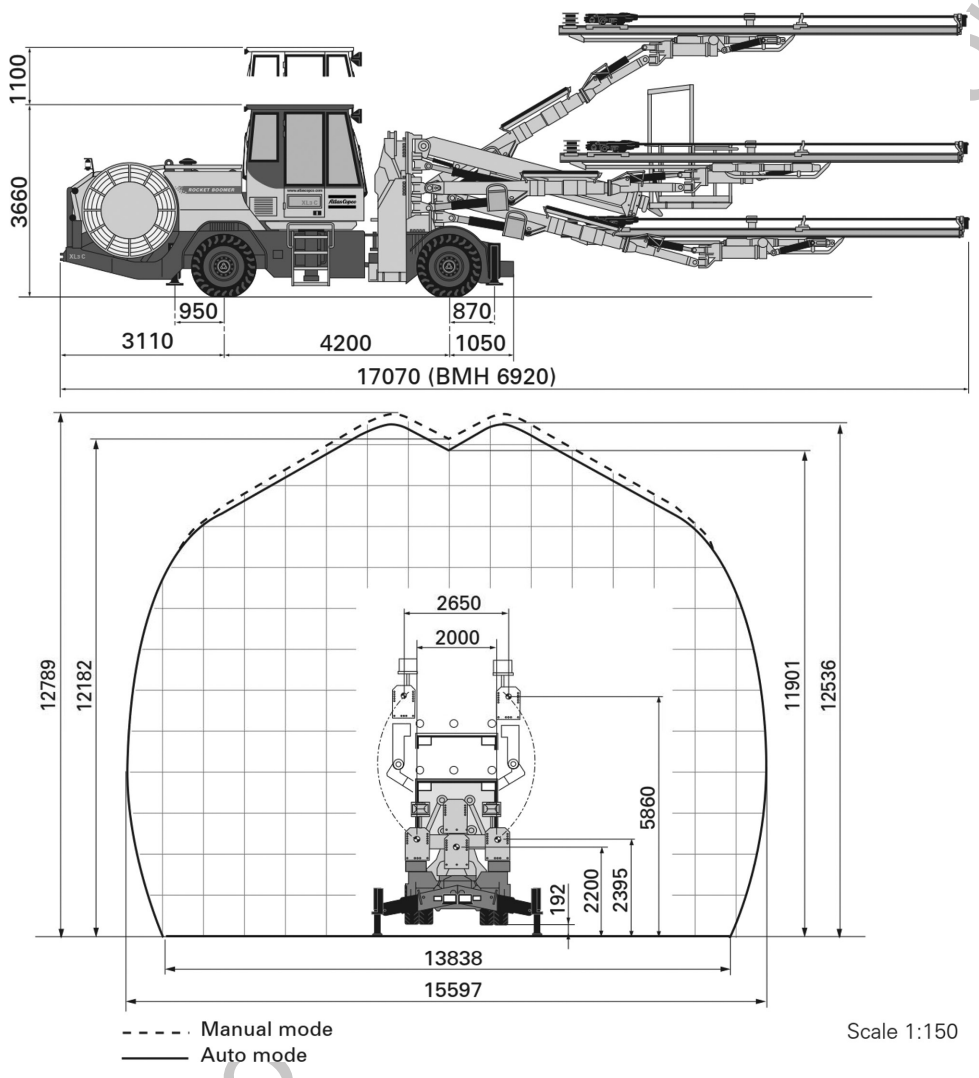

Figure 2.9 Example of a jumbo for tunnel driving (Rocket Boomer XL3 C, Atlas Copco, for sections up to 170 m^2). Mechanised drilling equipment used in tunnelling and drifting are designed to give optimum performance in the range 32–54 mm. Drifting rods are designed to match hole sizes and needs of horizontal drilling (Atlas Copco catalogue).

Electronics in these machines have been used for years: computerised versions are produced, which automatically drill the blast according to a programme, avoiding the need to mark the positions of the holes and any operator intervention, unless required by accidental large irregularities of the face on which the drilling is performed. These machines allow a much better respect than what can be obtained with traditional machines.

T&F Proof

2.3.2 Equipment, personnel and their use for the excavation of a hard rock tunnel: an example

The data relating to an example of how several machines with different functions are aggregated, to represent the "super-machine" which is the excavation site of a tunnel, are provided in the following sections.

2.3.2.1 General data on the work

Tunnel cross section of about 76 m^2, length 620 m, slope from 1.1% to 5.2%, excavated in a medium-strength shale.

The excavation was carried out using a V-cut blast pattern.

This blast involved the execution of 109 holes, with a diameter of 51 mm, and a total of 440 m drilled, and allowed a theoretical pull of 4 m (actual pull 3.7 m).

The blasting according to the wanted sequence was obtained with delayed electric detonators, with series of 250 ms, arranged at the bottom holes.

The blast was loaded with three types of explosives: dynamite GD1, in cartridges 40 mm × 400 mm, 700 g; slurry in cartridges 40 mm × 400 mm, 600 g; profile charges, in tubular cartridges 5 mm × 400 mm, 240 g. To speed up the operation, the charge of each hole was prepackaged, except for the contour charges, in plastic tubes, each containing the number of cartridges of the different explosives necessary for a given hole.

The overall charge was 400 kg, the theoretical powder factor was 1,320 g/m^3, the volume/blast being 304 m^3 on site and the specific drilling was 1.44 m/m^3.

2.3.2.2 Personnel and equipment

The committee staff amounted to 33 people.

Machines employed for the excavation:

- *Blast drilling*: three-arm jumbo, electro-hydraulic;
- *Muck removal*: 1-wheel loader with 4.5 m^3 bucket + 3 dump trucks (2 of 18 m^3 and 1 of 16 m^3);
- *Scaling*: 1 heavy hydraulic hammer mounted on an excavator;
- *Spritz beton*: one pump on a carrier;
- *Bolting*: a drilling - bolting machine mounted on a truck;
- *Other jobs*: 2 platform wagons and 1 telescopic handler.

Also available were:

- a fixed transformer 15,000/6,000 V;
- a mobile transformer 6,000/380 V (380 V is the power supply voltage of the machines);
- 2 electro-compressors (22 m^3/min, 7.5 bar) for the production of compressed air;
- pumps for water supply;
- 12,000 l/min electric fan.

The work was performed on two daily shifts according to the time schedule (detected on site). The organisation consisted of 3 blasts/2 shifts.

T&F Proofs – Not for Distribution

The average speed of advancement was 160 m/month, against a theoretical speed of 190 m/month, which was expected in lack of setbacks (breakdowns, delivery delays, etc.).

2.3.3 Robotizied Jumbo

Recently, a new generation of fully computerised drilling jumbos has been designed to improve the quality of the perforation. The main improvements, tested and proved through various worldwide case histories, are as follows:

- More accurate profile, which means less over blast, less damage to the surrounding rock, reduced support work, substantial concrete saving (in case of final lining);
- Excellent tool for drill pattern optimisation and subsequent optimisation of the explosives consumption;
- Facilitates longer rounds for water drainage and exploration drilling;
- Complete round documentation available through the logging facilities.

Thanks to the fully computerised system, the booms movements and drilling operation are achieved with minimum human intervention, according to the drilling plan initially loaded to the computer. Real-time information is displayed and can be retrieved via Wi-Fi or USB: drill bit position and angles, drilled depth and holes sequence and should provide information useful to the engineering choices such a geological/probe-drilling data.

An example of this application can be the drilling device used at Brennero Base Tunnell project where in hard rock mass has been used with a very fast drilling cycle, optimum excavation profile in combination with a sophisticated and performing PLC system (Figure 2.10).

Special designed jumbos can also be used for shafts excavation; they can be equipped with various devices in function of the operations needed, for example:

- Particular lifting geometry able to handle the equipment in function of the shaft diameter for fast demobilisation;
- Boom cinematic able to drill vertically and horizontally (to swap from horizontal to front face drilling procedure);
- Bolting cinematic (for reinforcement safety procedures);
- Diesel and compressor (for self-powering) plus water pump integrated for flushing.

Jumbos can also be used to automatically install a certain number of supports or pre-supports such as bolts, steel pipe for the umbrella and piles (Figure 2.11).

2.4 PUNCTUAL MECHANICAL EXCAVATION

As already discussed in Chapter 8 of Volume 1, the principal methods of mechanical excavation in conventional tunnelling are as follows:

- Roadheader;
- High energy impact hammer;
- Drill & split.

T&F Proofs – Not for Distribution

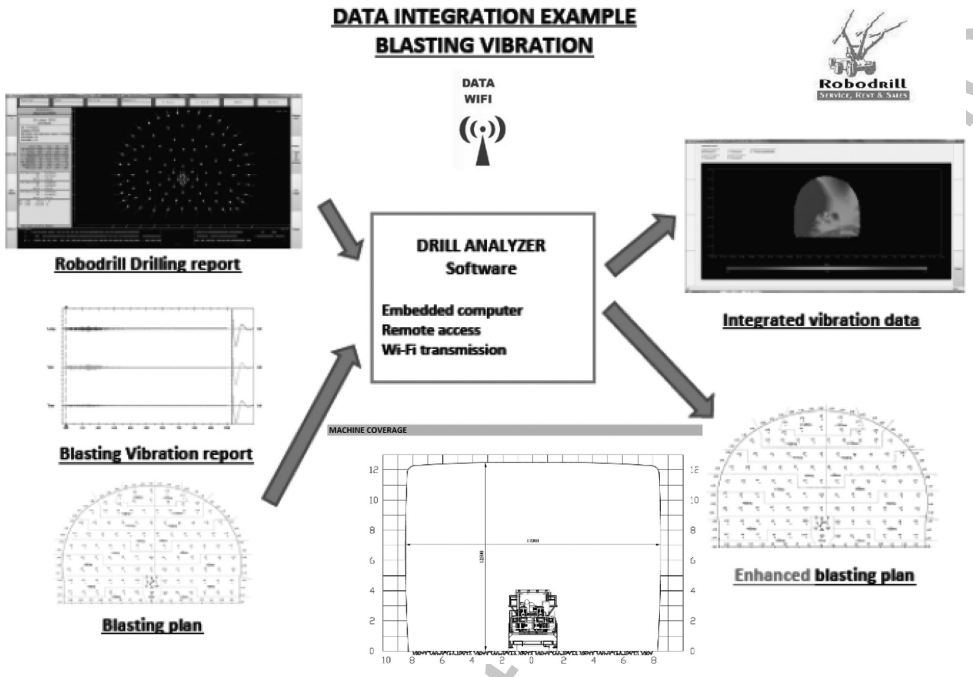

Figure 2.10 Example of robo jumbo data integration system and usual working section coverage. (Courtesy of Robodrill.)

Roadheader: It was largely developed for the mine activity especially in coal mines to avoid the use of explosives. The principal advantages of this method of excavation are as follows: a good profile (especially using automatic guidance system, very low-induced vibrations, continuous mucking during excavation and good performance in rocks with low and medium hardness). The principal disadvantages are: production of dust and necessity of specific solution for ventilation (as discussed in Chapter 6 of Volume 1), cost of the machine, limitation in the size of tunnel (difficulty to use in a full-face advancement of road and railways tunnels), need for important planned maintenance to change picks and lubrification, necessity of specific energy supply systems, slow velocity and complexity to move the equipment in the tunnel.

High-energy impact hammer: The use of hydraulic hammer for tunnel excavation and not only local activities such as the excavation of niches began in the 1980s. The first use was for face cleaning and profile adjust in the drill & blast advance. In the time following, start its use as an excavation system adopting equipment having higher impact energy to improve the productivity. The principal advantages of this method are as follows: possibility to use conventional hydraulic excavator easily available on market (although a special excavator having tunnel boom is recommended), possibility to use, choosing the correct equipment, in tunnels having different sizes, easy maintenance, possibility in the big tunnels to have a quite continuous mucking using a loader that can work at the face in the side of the excavator, relatively easy moving of equipment from face to park zone (although long route are not recommended to

T&F Proofs - Not for distribution







Figure 2.11 Example of customised jumbos for special applications: ground reinforcement and bolting, in Grand Paris tunnels. (Courtesy of Robodrill.)

preserve track). The principal disadvantages are as follows: no good profile especially in jointed rocks and using conventional excavator, cyclic vibrations and influence on rocks behaviour, dust production (but can quite easily be controlled by water). The advantages and disadvantages of this method are summarised in the template at the end of this chapter.

Drill & split: This concept to break a rock by a mechanic action in a hole is very old and was used up to the arrive of explosives. More recently, the use of hydraulic force coupled with a wedge system has been developed for secondary works in carriers when it was necessary to break a big stone to remove it easily. Only in recent times, the hydraulic system was improved and applied in extensive excavation outside and in tunnel to solve particular situation in which any vibration is allowed and the rock is very hard. The principal advantages of this method are as follows: any vibration produced during breaking, very good profile control (having an automatic guidance

T&F Proofs

Table 2.1 Punctual mechanic excavation: comparison of principals aspects of different methods

Criteria	*Roadheader*	*Impact hammer*	*Drill and split*
Profile control	Good	Average	Good
Minimisation of the vibration	Good	Average	Excellent
Reduction of dust	Good	Average	Good
Production	High	Average	Small
Investment	High	Low	Low
Needed of qualified personal	Average	Low	Average

system for jumbo drilling), no dust and reduced needs of ventilation, possibility to apply to any face dimension (choosing appropriate excavator and drilling unit). The principal disadvantages are: very slow and expansive, requirement of skilled operator, important maintenance and use of special grease for wedge lubrification. The advantages and disadvantages for different tunnelling aspects are summarised in Table 2.1.

For the choice of the best excavation for each particular application, a complete analysis is recommended including an evaluation of cost and production analysis and risk assessment.

2.4.1 Roadheader

Depending on the slewing design, two main types of machines are distinguished:

- continuous miners;
- roadheaders.

Continuous miners can only perform vertical slewing motion of the boom. The boom carries a rotating cutter drum tooled with picks mainly used in mining.

Due to their cutting principle, the boom of continuous miners with only vertical motion are restricted to mineral excavation in seam-like deposits as coal or potash salt, where they cut rectangular profiles with flat roof only. Roadheaders are characterised by independent vertical and horizontal slewing movement of the cutter boom. Thus, they are suitable for cross sections with curved shapes, like the traditional horseshoe arch (Figure 2.12).

This greater versatility allows the roadheader to adapt to profiles with varying size. Furthermore, these machines allow the excavation of larger sections in consecutive steps. This feature of application makes roadheaders a proper tool for tunnelling, if large sections and difficult boundary conditions (low rock mass stability, neighbourhood to existing sensitive structures) call for smooth excavation.

The first appearance of boom-type equipment for underground excavation can be dated back to the 1930s. The first machines applying drag bits on a boom-mounted cutter head were used in the United States, where the continuous miners later on appeared, and in Russia, which is the actual birthplace of roadheaders.

T&F Proofs – Not for Distribution

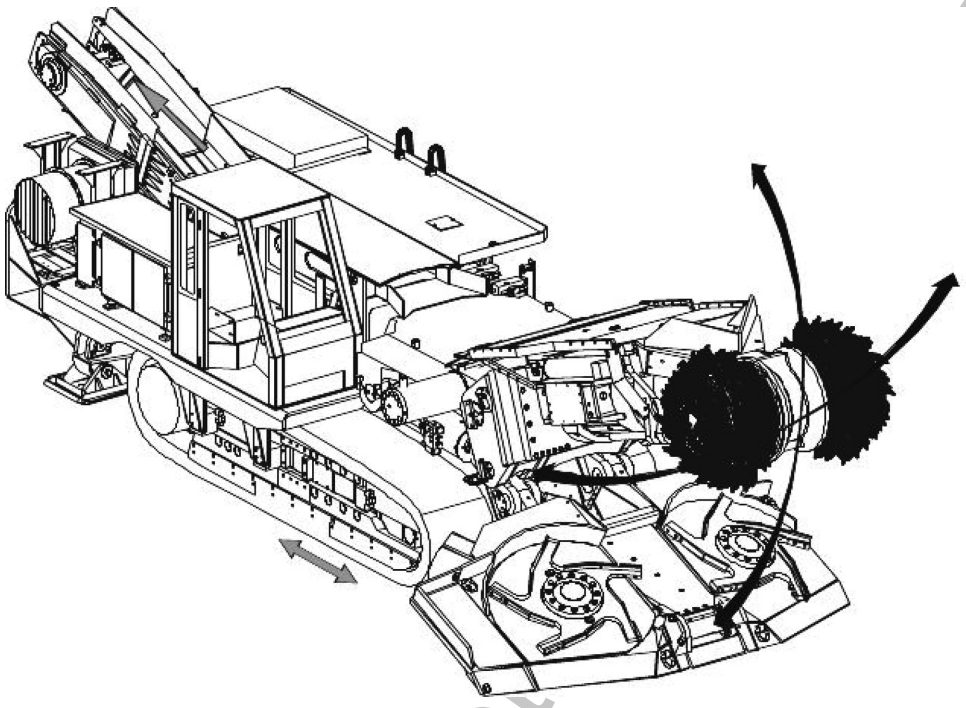

Figure 2.12 Pictures of the roadheader and its main functions. (Courtesy of Sandvik.)

2.4.1.1 General principles of roadheader operation

Roadheaders excavate the rock by means of a cutter head mounted on a cutter boom. The cutter boom can be independently moved in horizontal and vertical directions.

A roadheader in standard design covers the following functions:

- cutting the rock face;
- loading the cut material on the loading table with loading arms or spinners;
- muck transfer onto consecutive haulage systems (vehicles or belt conveyor), which is done by a chain conveyor located in the centre of the machine.

The sequential process of rockmass excavation is the basis of the versatility of roadheaders in relation to shape and size of the cross section and enables selective cutting.

The individual steps of a cutting sequence are:

- sumping;
- cutting of face;
- profiling (if required).

Large sections can be divided into part faces and excavated in consecutive steps. This procedure is common in civil tunnelling and excavation of big underground caverns (Figure 2.13).

T&F Proofs - Not for Distribution

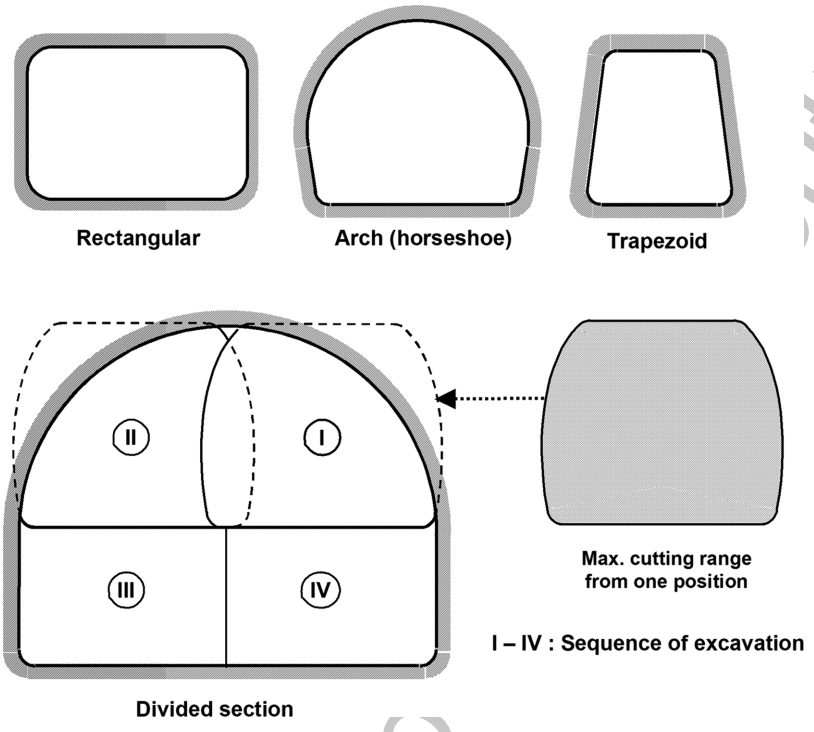

Figure 2.13 Typical cross sections for roadheader excavation.

Sumping – the movement of the cutter head into the face – is affected either by advancing in suitably dimensioned steps (several cm) of the crawler tracks (majority of machine types) or by a cutter boom telescope. Afterwards, the sump is extended over the entire width of the face by horizontal swivelling of the boom.

Sumping requires the greatest amount of power and generates the greatest reactive forces in longitudinal direction – during sumping, the largest number of picks is involved in the cutting process. Therefore, the sump is positioned in such a way that this effect can be kept on the lowest possible level and/or requires the minimum time:

- if the face shows a softer layer (e.g. a coal or clay seam), the sump shall be located therein. Otherwise, sumping is done with a more or less horizontal boom position;
- the cutter head position should not be lower than ~1.5 m above floor level to maintain a sufficient space for muck storage on the apron.

Under normal rock conditions, the sumping depth varies between 50% and 60% of the cutter head diameter. This results in lower vibrations than a shallower sump. A shallower sump must be chosen in rock conditions close to the upper strength limit for a certain machine. This way, sufficient cutting force per pick can be made available, but with the disadvantage of reduced length of the cutting cycle.

Cutting of the face is initiated after the final sumping depth is achieved. For this purpose, the cutter head is raised via the vertical boom cylinders in accordance with

T&F Proofs – No Distribution

the relevant rock conditions (with increasing rock strength the amount of offset must be reduced). Normally, the face portion above the sump is cut first, afterwards the lower portion.

If the roof conditions show a short stand-up period also the lower part of the face can be excavated first, if the stability of the face itself admits this sequence. The consecutive upwards cutting action benefits from an enlarged space for muck pile formation.

Profiling as a separate final step is applied, if the excavation shape calls for utmost accurate profile, e.g. to minimise efforts for roof protection. For this purpose, the roadheader is retracted for approximately half of the sumping depth and the remaining rib of rock resulting from face cutting is removed by activating horizontal and vertical boom cylinders in small increments.

Gathering of the excavated muck is affected by means of the gathering arms on the loading table. In general, the loading process can be done simultaneously with excavation. The central array of the loading table assists the possibility of continuous cutting by providing the facility of intermediate storage of muck.

Muck transfer onto consecutive haulage systems is done by a chain conveyor, located in the centre of the machine.

For larger sections, it is common in some countries to remove the muck by independent loading equipment (wheel loaders). Roadheaders have no loading table, and there is no conveyor for this mode of mucking: however, this is kind of excavation is not applied very often in today's tunnelling technology. Therefore, cutting is interrupted, and the roadheader is retracted from the face to allow access for the loader.

Also, other applications in large sections are assisted by wheel loaders. They are applied to remove muck from outside the reach of the loading device during non-cutting periods (e.g. in advance of rock support).

Machine transfer within the immediate face area as well as between two neighbouring operated faces (place change) is affected by the crawler tracks. Some machines even perform sumping by activating the crawlers (if there is no sumping, cylinder is available). The crawler tracks are driven independently (usually by a variable speed hydraulic motor). Some roadheader models are equipped with an on-board diesel engine to facilitate quick and easy transfer between different locations, if needed.

Actual operation of a roadheader requires only one machine operator. In practice, it is advisable to employ one auxiliary worker in addition just in order to pull along the power cable and assist the operator by indicating the cutter head position in areas of the face outside of the operators field of sight (if the roadheader is not equipped with a profile control device.).

2.4.1.2 Continuous excavation with roadheaders

The operation of a roadheader allows a more continuous development cycle, compared to the strictly cyclic drill & blast operation, as already discussed in Volume 1.

In the case of a "Bolter roadheader", also the roof support system is an integrated part of the roadheader. In this case, no place change is necessary, the roadheader is only moving forward, and can perform excavation, mucking out, ventilation/dedusting and roof support – all from a single machine. This excavation method is mainly applied in mines for long and small development tunnels.

T&F Proofs – Not for Distribution

Due to its compact dimensions, a roadheader frequently forms the essential element in a complete roadway development system, incorporating cutting, loading, roof support installation, conveyor extension and dust extraction. The mechanical excavating process is less labour intensive and provides excellent opportunities for automation with a high potential of cost reduction.

2.4.1.3 Roadheader components

A standard roadheader comprises the following assembly groups (components), see, as an example, Figure 2.14 below.

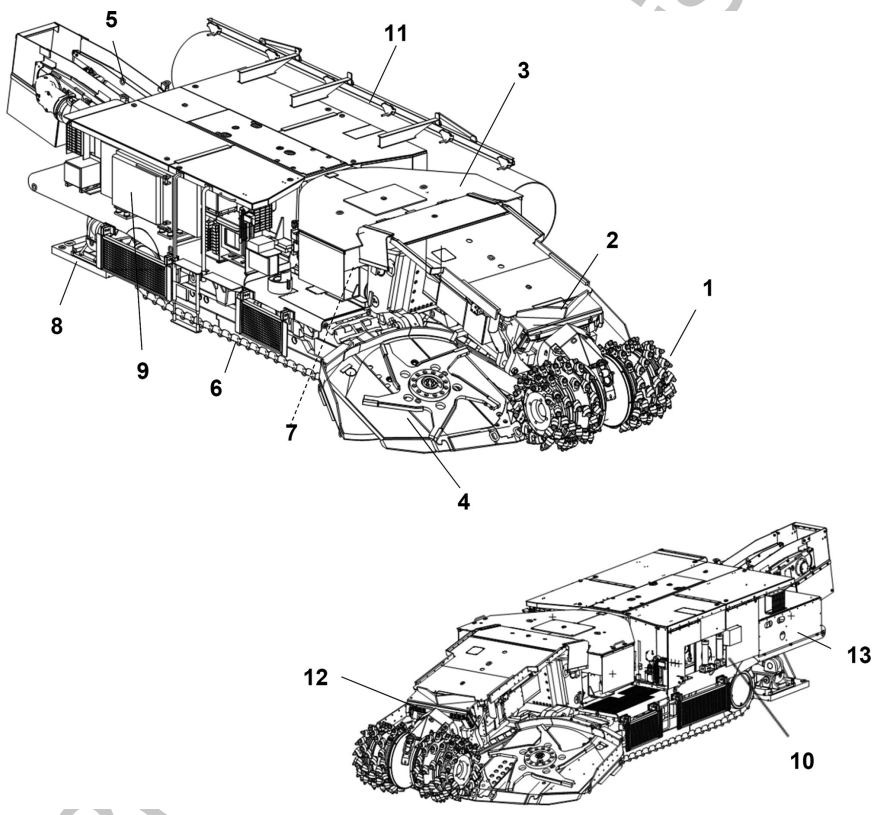

Figure 2.14 Assembly groups of a roadheader (MH620 of Sandvik).

1	Cutter head	8	Rear stabilizer
2	Cutter boom with E-Motor	9	Electric equipment
3	Turret	10	Hydraulic equipment & oil cooling
4	Loading table with spinners	11	Monorail for spiral tube
5	Chain conveyor	12	Spray bar
6	Crawler track	13	Water cooling and supply
7	Frame		

T&F Distribution

2.4.1.4 Operating principles

Cutter heads form the actual cutting part of a roadheader. Their design with respect to the expected operating conditions is very important. All other functions of a roadheader have the purpose to assist the operation of the cutter head.

According to the operating principles of a roadheader, the design of cutter heads has to consider three more or less independent, but interfering motions:

- rotation;
- horizontal slewing;
- vertical slewing.

This interference is different for the individual steps of the cutting process (sumping, face cutting and profiling).

In principle, two different types of cutter heads exist (Figure 2.15):

- transverse cutter heads (also called "Ripper type cutter heads" with an axis of rotation perpendicular to the axis of the cutter boom';
- longitudinal cutter heads (also called "In-line or milling type cutter heads") with their axis of rotation parallel to the axis of the cutter boom.

In the early times of roadheader technology, longitudinal cutter heads were more popular because gear design is somewhat easier (no change of direction of rotation). Gear design and endurance are no longer a weak point, and today, the majority of roadheaders feature transverse cutter heads because of their advantages regarding design and operation.

More information on the picks and their way of functioning can be found in Bilgin et al. (2014).

In Table 2.2, a brief comparison of the two cutter head types is shown.

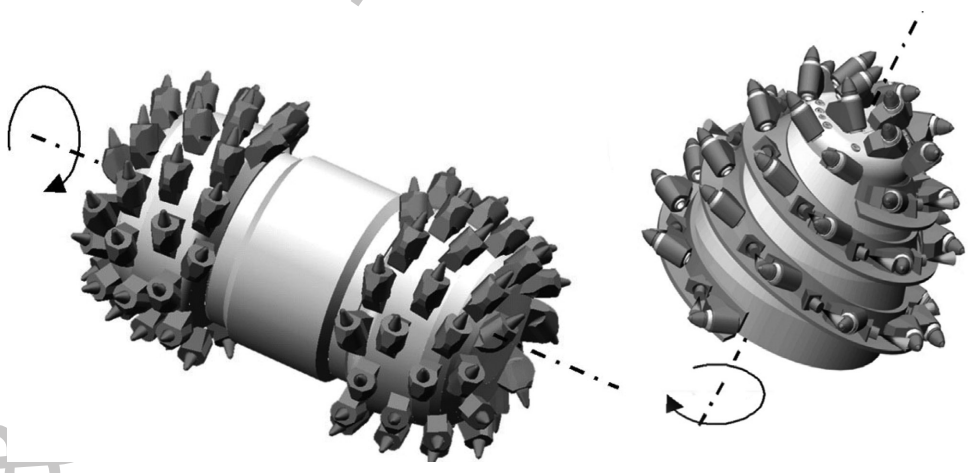

Figure 2.15 Principal cutter head types: transverse cutter head (a), longitudinal cutter head (b). (Courtesy of Sandvik.)

T&F – Not for Distribution

Table 2.2 Comparison of different transverse and longitudinal (inline) cutting system

Transverse cutter head	*Longitudinal cutter head*
Cutting action directed toward s the face • Reaction forces directed towards machine body • Reaction forces predominantly counterbalanced by machine weight • Higher stability of machine • Higher power can be transferred into the rock at same weight • Easier and less time consuming sumping (mainly in harder rock)	Cutting direction sidewards (perpendicular to cutter boom axis) • Reaction forces directed parallel to the face (perpendicularly to machine axis) • Reaction forces predominantly counterbalanced by friction between machine and floor • Machine tends to move sidewards • Machines need higher weight (up to 25%) or propping against sidewalls. • Sumping requires more time and can limit application in harder rock
Pick attack, pick array	
Pick attack towards face • Better utilisation of dynamic effects • Greater assistance of parting planes, predominantly if ±horizontal Cutting direction perpendicular to slewing • Pick array determined by cutting and slewing speed • Only moderate slewing forces required (only little influenced by cutting forces) Compromise of pick array necessary for cutting of sidewall ((up to 5%–15% of total excavated volume) • More or less constant slewing speed (by rack- and pinion type turret)	Pick attack sidewards • Dynamic effect limited • Limited assistance of parting planes – restricted to thinly bedded rock Cutting and slewing direction in the same plane • Pick array determined by slewing direction • High slewing forces required (high influence of cutting forces) Compromise of pick array necessary for sumping (up to 25% of total excavated volume) • Constant slewing speed not essential for cutting, but makes control of cutting and profile easier
Cutting rate	
Comparably higher performance, predominantly in harder rock • Higher amount of power transferable into the face due to higher stability • Advance per round restricted to ~60% of cutter head diameter • Cutting principle allows full utilisation of assisting rock mass features (e.g. cutting towards free face) • Less influence of changing rock conditions- higher performance in harder rock formations	Good performance in rock up to ~40 (50) MPa • Power transfer limited due to lower stability • Advance per round can be higher in soft rock (round length up to ~80% of cutter head length • No cutting towards free face – less effective cutting (higher specific energy required) • Considerable impact of higher rock strength (up to 50% lower performance at same power)

(*Continued*)

T&F Proofs – Not for Distribution

Table 2.2 (Continued) Comparison of different transverse and longitudinal (inline) cutting system

Transverse cutter head	*Longitudinal cutter head*
Loading of muck	
Muck thrown predominantly towards loading table • Assistance of loading by cutter head only for ~20% to 25% of total muck quantity • As a consequence, greater loading capacity • Loading has only little influence on pick and cutter head wear	Muck predominantly thrown sidewards • Assistance of loading by cutter head for up to 60% of total muck quantity • Special design of cutter head with loading spiral necessary to achieve sufficient loading effect • Loading assistance leads to considerable or even high contribution to cutter head wear
Accuracy of profile	
Accuracy of profile independent of size and shape of section • Certain over-profile unavoidable, but fully independent from size and shape of section (pictures below) • Position of roadheader in the section has also no influence on accuracy • Easy to remove remaining ribs at the periphery of section	Size and shape of section influence accuracy of profile • Smooth profile, if cutter head adapted to size of section and pivot of cutter boom in centre of section (lower picture) • If these conditions are not the case increasing over-profile with increasing dimensions of section (upper picture) • Smoothening of profile under these conditions possible only to a restricted extent, and time consuming
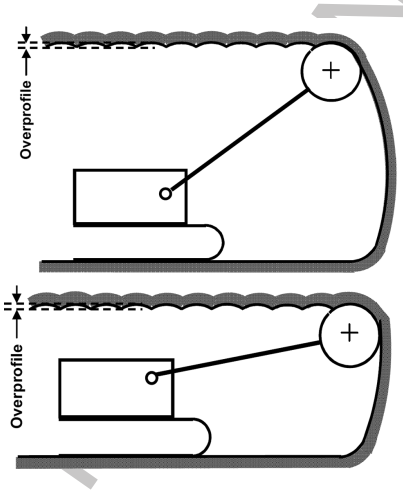	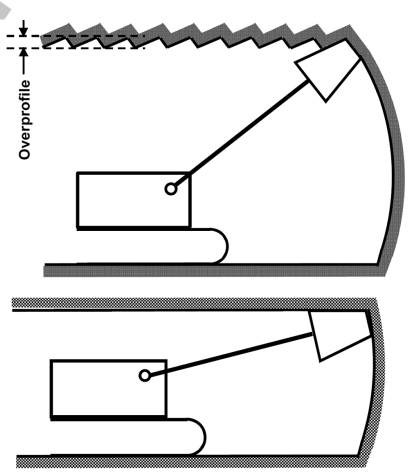

2.4.1.5 *Application of roadheader*

For roadheaders, the weight of the machine is closely linked to the installed power of the cutter motor (Table 2.3). Weight and power define, to a great extent, the range of application regarding the maximum size of cross section and the maximum cuttable rock strength.

T&F Proof Not for Distribution

Table 2.3 Classification of roadheaders and range of application (scheme)

Roadheader class	Range of weight (t)	Range of cutter head power (kW)	Roadheaders with standard cutting range		Roadheaders with extended cutting height range	
			Max. section (m^2)	Max. σ_c (MPa)[a]	Max. section (m^2)	Max. σ_c (MPa)[a]
Light	8–40	50–170	~25	60–80	~40	20–40
Medium	40–70	160–230	~30	80–100	~60	40–60
Heavy	70–125	250–300	~40	100–120 (180)[b]	~70	50–70

[a]Range depending on cutting behaviour of rock.
[b]Figures in brackets achievable with ICUTROC- technology.

Ultra-heavy roadheader (not included in above table) were found not be an economic solution (so far). Either the provided power cannot be transferred into the face or the resulting pick forces exceed the application limits of picks. Nevertheless, roadheader manufactures are working already on ultra-heavy designs as the actual trend in bigger tunnel profiles required new design approaches.

Light- and medium-weight roadheader with extended cutting range are in competition to excavator mounted cutting booms.

The classification of roadheader is a tool to identify their application range and furthermore their cutting capacity based on following requirements:

- minimum section of application;
- maximum cuttable section (from one position);
- maximum cuttable rock strength;
- rough estimation of cutting rate for a given rock strength roadheader class and their predominantly weight and power also define the size of a roadheader.

The minimum profile section, where a certain roadheader can be operated, is closely connected to these parameters. Or –vice-versa – a given section defines the maximum size of the applicable machine (Figure 2.16).

The rock strength, which can be tackled by a roadheader in a long-term application, depends again on installed cutter motor power (resp. the provided cutting forces) and the machine weight (to counteract the reactive forces, which increase proportionally with increasing rock strength. Figure 2.17 represents this correlation, in massive rock - without consideration of rock mass features).

In the practical application, certain rock with somewhat higher strength can be tackled (max. ~20%–30% above the indicated limits), but only if it occurs over very short periods (several metres) or in layers not exceeding ~30 cm.

The ability to cut hard and abrasive rock is one limiting factor and often claimed the major disadvantage for roadheader. Two facts contribute to this limitation:

- the cutter head power, which can be installed on a roadheader of certain weight, limits the achievable cutting rate. Furthermore, machine stability does not allow to transfer a sufficient amount of cutter head power into the face above a certain value of rock strength;

T&F Proofs – Not for Distribution

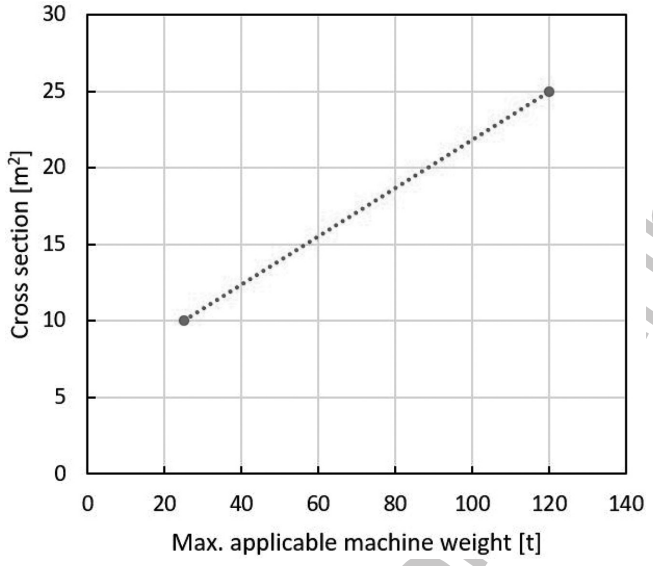

Figure 2.16 Max applicable machine weight for certain cross sections.

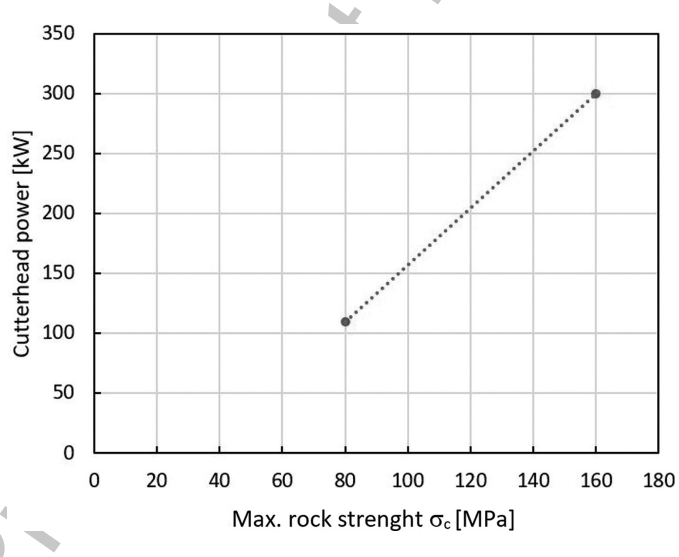

Figure 2.17 Cuttable rock strength as a function of machine weight and cutter head power.

- with increasing rock strength and abrasivity the load and wear to be countered by the cutter picks exceed the mechanical strength of the tungsten carbide inserts - resulting in excessive pick consumption.

T&F

In practice, the most common parameters of roadheader operation to be considered are:

- net cutting rate;
- specific pick consumption.

Practical limits of roadheader application are around the following net cutting rate (NCR) values:

- 15–20 solid m^3/h in small sections (below ~25 m^2);
- 5–40 solid m^3/h in sections above 50 m^2- but here also larger and more powerful equipment can be applied.

The fact that several operations showed results considerably worse than those mentioned above and have been found still acceptable can be attributed to project conditions, where a roadheader forms the only meaningful equipment for excavation.

Such conditions cover - among others:

- restriction or prohibition of blasting, e.g. in urban areas or at shallow overburden;
- rock conditions exhibiting poor stability or a great tendency to result in major overbreak.

Under such conditions, roadheader applications considerably beyond the figures stated above and close to the respective technical limits have also proven a very economical alternative.

Roadheaders are ideally suited - within the range of application given by their specific characteristics - for projects with the following features:

- short to medium length of a tunnel (up to ~5 km);
- tunnels with variable cross sections, mainly if arched sections are preferred;
- tunnels, where excavation should commence shortly after order;
- tunnels, where excavation has to be executed in divided sections;
- projects, where the use of explosives is restricted or not allowed.

Under such circumstances, the quick mobilisation of roadheaders, good interaction with other operations like rock support and lining and their low investment and operating cost take full effect.

Regarding environmental and safety conditions roadheaders show the common advantages of all mechanical tunnelling systems - smooth excavation of rock by avoiding shock loads and vibrations.

Consequently, quite a lot of roadheader operations take place in urban environment or elsewhere close to existing structures or with shallow overburden.

An important additional feature is the preservation of the surrounding rock, which results in a reduced amount of rock support and lining as well as improved long-term behaviour of the tunnel.

T&F Proofs – Not for Distribution

2.4.1.6 Main operating data and their assessment

2.4.1.6.1 CUTTING RATE

The NCR is the performance in solid m³/net cutting hour (nch), which is achieved through the period a cutter head is in actual cutting contact with the rock.

2.4.1.6.2 ROCK CUTTABILITY

For cutting rate predictions, some formula exists in literature (Bilgin et al., 2014), and they are mainly based on the standard geomechanical data (see Chapter 4 of Volume 1).

2.4.1.6.2.1 Rock mass cuttability rating

Some significant rock mass parameters are strongly influencing the rock mass integrity and cuttability, and the parameters are as follows:

- strength of intact rock;
- intensity of discontinuities;
- conditions (appearance) of discontinuity planes;
- orientation of discontinuity planes.

Increasing strength of intact rock aggravates cuttability, but at the same time it improves the efficiency of discontinuities to assist in the cutting process.

The condition and orientation of joint planes play an important role in the cutting process. These rock mass features are quantified and expressed in RMR Systems (e.g. RMR, GSI, Q-System…).

An index of predicting roadheader performances is so-called RMR Systems have been developed by Sandvik called Rock Mass Cuttability Rating (RMCR). Table 2.4 reports the rating of various parameters, and the RMCR is the sum of various ratings.

The RMCR rating is used to evaluate the rock mass strength by reducing the laboratory test σ_c figures considerably (Figure 2.18):

The orientation of joint planes in relation to the attack direction of the cutter picks can increase or decrease the efficiency of the cutting process. In particular, we can divide two cases:

- *Very favourable*: most influential joint set slightly inclined to nearly horizontal (−12);
- *Very unfavourable*: most influential joint set highly inclined to nearly vertical (0);

The influence of the RMCR on the cutting capacity of a roadheader is summarised in the following Table 2.5:

It is evident, that with increased efficiency of parting systems (lower RMCR), a significant increase of performance occurs.

Investigations showed a further important additional advantage of low-speed cutting:

T&F Proofs – Not for Distribution

Table 2.4 Table for application of the RMCR system

Rating of uniaxial compressive strength		*Rating of block size*	
		Block size (m^3)	*Rating*
σ_c (MPa)	Rating	>0.6	20
1–5	15	0.3–0.6	16
5–25	12	0.1–0.3	10
25–50	7	0.06–0.1	8
50–100	4	0.03–0.06	5
100–200	2	0.01–0.03	3
>200	1	<0.01	1

Rating of joint conditions				*Rating of orientation of joint set*	
Surface	*Aperture*	*Wall/Fall*	*Rating*	*Influence on cuttability*	*Rating*
Rough	Closed	Hard, dry	30	Very favourable	−12
Slightly rough	<1 mm	Hard, dry	20	Favourable	−10
Slightly rough	<1 mm	Soft, dry	10	Fair (and if block size <0.03 m^3)	−5
Smooth	1–5 mm	Soft, damp	5	Unfavourable	−3
Very smooth	>5 mm	Soft, damp to wet	0	Very unfavourable	0

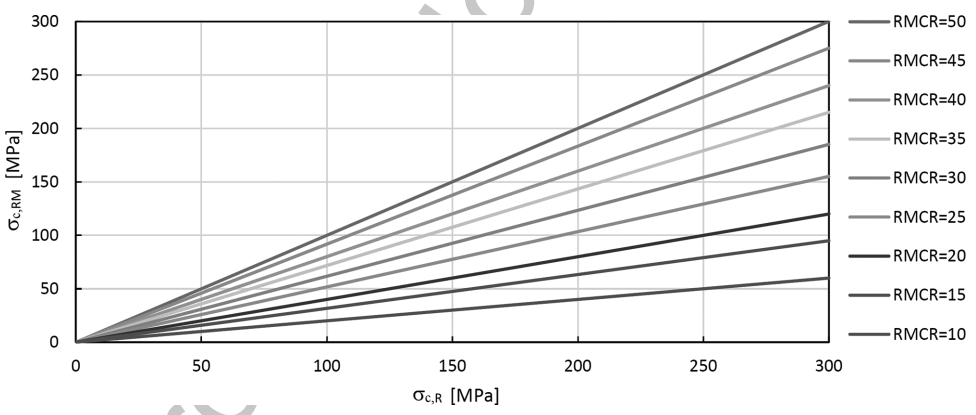

Figure 2.18 Reduction of rock mass strength related to rock strength (for the purpose of rock mass classification for roadheader application). (Courtesy of Sandvik.)

At low cutting speed the influence of rock mass features on cuttability are even higher, due to:

- increased available time to "activate" parting systems;
- increased reach of induced stress fields under a pick simply due to higher applied force.

T&F Proof Not for Distribution

Table 2.5 RMCR influence on cuttability

RMCR	*Influence on cuttability by roadheaders*
40–60	No to little influence
25–40	Moderate influence
15–25	Considerable influence
15–25	High influence
<10	Dominating influence

2.4.2 High energy impact hammer

High energy impact hammers (HEIH) have been used widely in mining industry and civil engineering applications since 1960. The working principle of a modern hydraulic hammer is simple. There is an oleodynamic piston moving up and down and striking against the tool end. To produce big energy pulses during downwards strokes, the hammer is equipped with an accumulator that can supply needed oil volume in a short time. The accumulator is charged continuously by a hydraulic pump. Breakers that can be usually mounted to a mobile carrier range in size from those that can be paired with a carrier weight class of 13 t to a carrier class of 50 t or more. After initially using a large, heavy breaker to begin the demolition process on construction sites, smaller breakers can be used to break down the concrete materials prior to screening and crushing.

The total number of hydraulic breakers can vary from site to site depending on the required production levels, the type of material being excavated and the entire scope of the operation. The excavation process can be optimised not only in function of the breaker typology, type of tool in the sense of shape and material used (special steel usually), type and class of crawler and boom excavator, which can be simple, double and or with triple articulation.

When the piston strikes the top of the tool, it sends a compressive stress wave down to the working end of the tool. If the tool is touching a rock, this energy/force (compressive stress wave) travels out the tool directly into the rock, fracturing it.

Immediately following the initial compressive stress wave, a reflected stress wave is formed, which travels back up the tool, "bouncing" the piston up off the top of the tool. This cycle of compressive and tensile stresses flowing up and down the tool is repeated with each piston blow.

Anything interfering with the strength of the compressive stress waves during operation such as blank firing (free-running) or prying with the tool, can lower breaker performance and cause tool fatigue (if the tool is not pressing on a rock, the energy that normally travels out the tool into the rock, impacts the retainer pins and front head causing excess stress to these components). Therefore, the HEIH must act at a 90° angle to the face of the rock.

2.4.2.1 Sizing the HEIH

When sizing the hammer (also called breaker) to the machine, two key points should be given careful consideration:

T&F Proofs – Not for Distribution

1. machine operating weight;
2. hydraulic system capabilities.

Sizing the hammer by carrier hydraulics gives the operator a carrier/hammer combination designed to optimise the system efficiency, thereby reducing heat generation and eliminating power loss. It is important to fit the carrier of the hammer since an oversized hammer also transmits energy in two directions, toward the material and through the equipment producing wasted energy that can also damage the carrier. Various companies have developed abaci to select the optimal carrier with reference to energy and weight of the hummer.

But using a hammer that is too small with reference to the carrier puts excessive force on the tool steel, which transmits percussive energy from the breaker to the material and can damage the adapters and internal components, which considerably decreases their life. It is important to remember that, as rule of thumb: if a hammer is used in one spot for more than 30 seconds without seeing penetration, dust, cracks or fissures, it means that the breaker is too small for the type of rock mass and the energy it can apply it is not enough.

The production rate that can be used is the next important factor to consider in sizing the hammer. The carrier machine must be able to safely handle the hammer at any distance out from the machine where you might be working.

Considering the size of the hammers, the following can be summarised:

- small hammers up to 1,350 J are typically used in concrete and other light duty work;
- medium hammers ranging in the field of 2,000–5,400 J are used in both concrete and rock applications with limitations on the size and amount of material to be broken;
- larger hammers with energy greater than the 5,400 J are typically used in hard rock, high production in the demolition actions.

When breaking oversize material, the hammer is expected to break the material down quickly into multiple pieces. This is optimum production. If the operator has to re-position the breaker towards the edge of the rock and gradually downsize the material, the production rate slows down.

When trenching, the breaker is expected to fracture a solid mass of rock into manageable pieces and if working in limestone or medium-hard rock, it is suggested to use a 4,000–5,500 J hammer while trenching in hard material, it is better to use a hammer with an energy up to 10,000 J.

When breaking concrete, the hammer is expected to penetrate the material, allowing it to crack and shake loose from the reinforcing steel. High-frequency breakers tend to provide better performance in this application since it is not the energy per blow, but the fast blow rate that destroys the concrete's structural integrity. On concrete walls, footings and floors are usually recommended a 1,000–2,000 J hammer.

It is very important when working with Hieh it is the correct choice of the tool. The three must-haves for any operator who does a considerable amount of demolition are as follows: moil, chisel and blunt.

T&F Proofs — Not for Distribution

The moil point is shaped like a pencil and is ideal for breaking hard concrete reinforced with rebar and demolishing brickwork. Operators can place the point's narrow tip into cracks and between the rebar to separate material. A chisel point looks similar to a screwdriver and will give the best splitting action. It's available in standard and wide widths. The blunt point features a flat face with more surface area to deliver more impact when breaking slab concrete and is the one usually used to break the rock mass in tunnelling.

2.4.2.2 Drill and split

This method of rock breaking used for ornamental stone was recently improved by the design and production "Super Wedges" and was recently applied successfully in some tunnel projects, like the Follo Line in Norway, to solve very severe interferences when the vibrations should be minimised in very hard rock mass.

The concept of this method consists of drilling a hole in the rocks, introduce in the hole a wedge and force it to slide producing a force on the hole walls able to create fractures in the rock (Figure 2.19).

This concept is shown in the figure below (left side). The other figure, while in the right side, shows an equipment able to work in tunnel, installed on an excavator boom.

The size of the fracture produced by each hole is limited, and it depends from the rock hardness. These conditions are relatively simple to realise for the breaking of a big stone isolated in which it is possible to drill several holes spaced of 40–50 cm and use more hydraulic wedges working together in these different holes.

In the tunnel face, the situation is more complex, since it is necessary to have a free surface to allows the detachment. An interesting method to form a free surface is proposed by Noma and Tsuchiya (2003). Different solutions may be applied, one is provided by the drilling of several parallel big holes (150 mm of diameter or bigger) with a reduced distance between them (less than hole radius).

In the tunnel face, after the realisation of the first cut, it needs to drill the holes for the super wedge action. These holes have a diameter of 76 mm and are spaced. The profile holes have a reduced distance to get a more regular surface. Moreover, it is

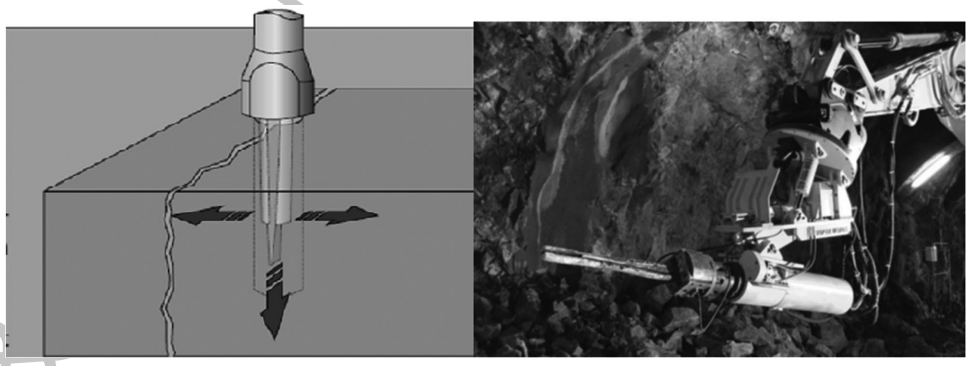

Figure 2.19 Example of the drill and split action and picture of the tool (Santarelli & Ricci, 2019).

T&F fs – Not for Distribution

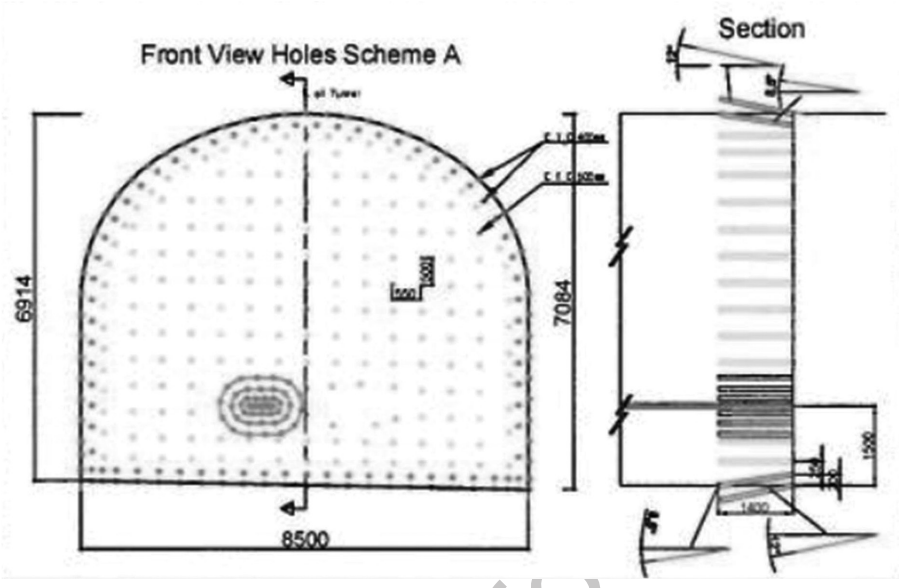

Figure 2.20 Example of drill and split perforation pattern.

necessary to give an outlook to the profile holes to have enough room to drill and to split the profile holes in the step after.

An example of drill path development for a drill and split advancement is shown in Figure 2.20.

The number of holes is very elevated (in hard rock, it is necessary at least 600 holes for a section of 85 m^2). The system requires hole longer than the wedge to assure a free space during moving of wedge and avoid mechanical rapture of equipment (for a demolition of about 1 m, a hole depth of 1.6–1.7 m is required).

After the completion of all the drilling, the split can start from the hole closest to the cut, we can produce the first open in the face. Starting from this area, we must continue to split holes by holes until the excavation of one step is complete.

Summarising, the drill & split method requires bigger holes longer and smaller spaced than those used for the drill & blast. In addition, it is mandatory to respect a strict geometry of the holes; therefore, the use of a jumbo with an automatic control of position and direction of each hole is crucial to achieve good results.

Another important element of the system is naturally the Super Wedge. This is installed on a hydraulic excavator, by a special tool able to turn the Super Wedge unit in all directions horizontally and vertically, and this to ensure a correct alignment between the wedge and the holes, essential to avoid incorrect introduction in the hole with breaking of the wedge, a camera and a screen in the cabin support the operator to centre the hole.

It's very important to select and to train the operator for this particular task. Considering that holes are splitted one by one, the excavation is very slow with this method and, for a tunnel of 85 m^2 is expected to dig between 0.5 and 0.8 m every 24 hours of work. According to experience, the productivity of this system is strongly influenced

T&F Proofs – Not for distribution



Figure 2.21 Example of a drill and split tunnel face with two machines work in parallel.

by the presence of fractures in the rock and by the filling of the fractures. The orientation of rock joints is very important, and the presence of rock joints parallel to the face makes the excavation favourable.

To improve production, a strategy may be, if we have enough space, to work with two excavators in parallel (see the photo below). Another strategy can be to work in top heading and excavate the half bench behind at a distance of 40–50 m from face (Figure 2.21).

2.5 FULL-FACE TBMs FOR TUNNELLING THROUGH ROCK MASSES

The mechanised method of tunnels excavation, which nowadays is the most frequently adopted method of excavation, particularly for long and deep tunnels, has relatively ancient origins.

The first attempt dates back to 1851, when Charles Wilson, an American engineer, attempted to create a machine, known as "Wilsons Patented Stone-Cutting Machine" manufactured for the excavation of the Hoosac Tunnel, located in western Massachusetts (USA), mainly through coarse granitoid gneissic rocks. Mechanical problems, together with those related to cutters technology, did not allow the mechanised method of excavation to compete with the drill and blast method, that was rapidly developing in those years, and it took about another 100 years before Wilson's idea of using disc cutting tools mounted on a rotating head have been successfully applied. Another famous attempt was undertaken in 1881 by Colonel Beaumont, for the construction of an exploratory tunnel beneath the British Channel. The machine designed by Beaumont was equipped with a 2.1 m diameter cutterhead and equipped with peaks capable of digging along concentric circular tracks during the rotation of the head. This primordial TBM excavated more than 1.800 m with reasonably good average advance rate,

T&F Proofs – Not for distribution

but due to strong political pressure, the project was halted in 1882. Practically, no serious attempts have been made since then, until 1952, when James S. Robbins designed a Tunnel Boring Machine to excavate four tunnels through sedimentary rocks with low strength at Oahe Dam in South Dakota, USA.

This TBM (Robbins model 910-101), with a diameter of 7.85 m, was equipped with a cutterhead consisting of two counter-rotating units equipped with carbon steel button peaks, mounted on the radial section and parallel lines of disc cutters, which protruded slightly less than the peaks. It is interesting to note that this machine, with a total weight of about 114 tonnes and equipped with two 150 kW electric motors, successfully excavated in soft sedimentary rock formations with an extraordinary average daily advance rate of ~45 m.

As regards the first successful use of the mechanised method for tunnelling through rock formations of medium to high mechanical strength, it can be mentioned the construction, commenced in 1956, of a 4.5 km long tunnel for the Humber Sewer Project in Toronto, Canada.

The TBM utilised for this project was a Robbins machine (model 131-107) designed to allow excavation in compact crystalline sandstone and limestone with uniaxial compressive strength ranging from 5 to 186 MPa. The cutterhead with an excavation diameter of 3.28 m was equipped with disc cutters and peaks; the latter, on experimental basis, were however removed during the excavation of the tunnel. The use of disc cutters as the cutter tools, which roll on the excavation surface, has allowed the application of thrusts to the cutterhead, much higher than those applicable in the case of using peaks, which instead scratch the tunnel face, allowing better performance in terms of penetration and wear of the cutting tools.

Nowadays, for the construction of small and medium section tunnels, the Rock TBM excavation method is certainly the most widespread, also thanks to the development of effective support systems for unstable fronts and the equipment for their implementation, of techniques and technologies for the consolidation or reinforcement of rock masses (discussed in Chapter 8 of the Volume 1 and Chapter 4 of this book) and above all, thanks to the technological evolution of TBMs both in terms of powers installed for the rotation of the cutterhead and in terms of maximum thrusts applicable to the cutting tools.

The TBM excavation method, allowing to overcome adverse geological situations and to obtain advance rates, which in the case of medium section tunnels are about four times higher than those obtainable with the conventional methods, has permitted the construction of very long tunnels in absolutely unthinkable time until a few decades ago. The use of conventional techniques is nowadays limited to tunnels of modest length (up to about 1 km) where the cost of mobilising a TBM and its auxiliary equipment would not be economically convenient, or in case of very large excavation sections for which, in terms of production and cost-effectiveness of the work, the use of conventional methods may result convenient.

2.5.1 Main rock TBM types

This chapter deals with the description of the machines for full-face excavation through rock formations and will describe the operating principles and the main technical features of these machines.

T&F Proofs – Not for Distribution

By considering the technical and functional characteristics, the machines for full-face excavation in rock can be distinguished in two main types: open and shielded TBMs. Figure 2.22 shows for each type of machine and as a function of the diameter size the typical applications and the main characteristics parameters which depends on the geotechnical and site constrains.

2.5.1.1 Open type TBMs

Open-type TBMs can be distinguished according to the anchoring system construction type, which depends both on the excavation diameter, and therefore on the available space, and on the design of the machine manufacturers with a single anchoring system, a usually called "Main Beam type TBMs", while those with a double anchoring system are called "Kelly style TBMs".

Those with a single anchoring system (Figure 2.23) are characterised by having a single pair of gripper pads for distributing the anchoring forces on the surface of the excavation, while those with a double anchoring system (Figure 2.24) are equipped with two pairs of gripper pads.

For both TBMs advance is by thrust action generated by the main thrust hydraulic cylinders while the cutterhead is simultaneously rotating. From an operational point of view, the main beam type TBMs are supported, during the advance, by the cutter-head and by the gripper shoes, therefore, the advancement axis is not rigidly fixed but can be varied during excavation allowing almost continuous guide corrections while in those with double anchoring system since the advance thrust is opposed by two pairs of anchoring pads, placed at a certain distance between them, the advancement axis is rigidly fixed, therefore, cannot be varied during excavation.

Guidance corrections, in this case, can only be made at the end of the advancement stroke, or, by stopping the advance before completing the excavation stroke and repositioning the cutterhead axis.

It should be noted that the open-type TBMs with a single gripper system require, compared to those with a double anchoring system, greater total advance thrusts and this is due to the greater mass concentrated in the cutterhead support area and therefore by the greater friction developed along the contact surface of the front part of the machine, when this is kept in contact with the excavation surface during the tunnel boring.

Due to the greater mass concentrated in the frontal area, the main beam-type machines may show a tendency to undergo alignment variations, especially in the presence of masses with poor mechanical properties; however, the advantage that these machines offer to those with double anchoring system is that they absorb more effectively the vibrations produced by the cutterhead during excavation, ensuring greater efficiency in terms of advance and performance of the cutters.

In open-type machines with a simple anchoring system, the main thrust cylinders apply the thrust on the main beam being connected between the main beam and the anchoring system, while in those with a double anchoring system they are fixed on main body of the machine.

As a result of this main thrust cylinders arrangement, the "Kelly Style" TBMs are, therefore, more efficient in terms of thrust transmission respect the "Main Beam" type

T&F Proofs – Not for Distribution

			Rock TBM - Suitability and Application Ranges						
Dimension range		Tunnel Equivalent Diameter (m)	<2.5	2.5-5.0	5.0-8.0	8.0-10.0	10.0-12.5	12.5-15.0	>15.0
		Typical purposes	Services, Water facilities			Rail&Metro, Road, Hydro&water Multipurpose			Road Multipurpose
Open Mode TBM	Support type		Temporary supports according to design criteria						
	Geological-geotechnical contraints	Rock							
		Soils							
		Mixed conditions							
		Under water head							
		Face support required							
		Immediate tubbing required							
	Geometrical /site conditions contraints	Long&Deep tunnel							
		Shallow tunnel							
		Urban tunnel							
	Performance ranges	Average daily A.R. (m)	20-40	20-40	15-35	10-30	5-25	*	*
		Procurement - FAT (mths)	7-10	7-10	9-12	9-12	12	*	*
		Manpower (men/shift)	8	8	8-10	8-10	8-10	*	*
		Cutterhead - Power (kW)	1.100-1.500	1.700-2.000	2.500-3.500	4.000-4.500	4.500-5.000	≥5.000	*
		Cutterhead - Torque (kNm)	1.000-1.250	1.000-1.250	2.000-8.000	10.000-20.000	15.000-25.000	≥20.000	*
		Nominal Thrust (kN)	8.000-10.000	8.000-10.000	10.000-15.000	15.000-18.000	18.000-20.000	≥20.000	*
Single Shield TBM	Support type		Segmental lining						
	Geological-geotechnical contraints	Rock							
		Soils							
		Mixed conditions							
		Under water head							
		Face support required							
		Immediate tubbing required							
	Geometrical /site conditions contraints	Long&Deep tunnel							
		Shallow tunnel							
		Urban tunnel							
	Performance ranges	Average daily A.R. (m)	20-40	20-40	15-35	10-30	5-25	5-10	*
		Procurement - FAT (mths)	10-12	10-12	12-14	12-14	12-14	*	*
		Manpower (men/shift)	10	10	10-12	10-12	10-12	*	*
		Cutterhead - Power (kW)	1.000-1.300	1.300-1.500	2.500-3.500	4.000-5.000	5.000-7.000	*	*
		Cutterhead - Torque (kNm)	1.000-1.500	1.500-2.000	4.500-6.000	15.000-25.000	25.000-30.000	*	*
		Nominal Thrust (kN)	4.500-5.500	15.000-20.000	25.000-35.000	35.000-50.000	50.000-70.000	*	*
Double Shield TBM	Support type		Segmental lining OR temporary supports according to design criteria						
	Geological-geotechnical contraints	Rock							
		Soils							
		Mixed conditions							
		Under water head							
		Face support required							
		Immediate tubbing required							
	Geometrical /site conditions contraints	Long&Deep tunnel							
		Shallow tunnel							
		Urban tunnel							
	Performance ranges	Average daily A.R. (m)	20-40	20-40	15-35	10-30	5-25	5-10	*
		Procurement - FAT (mths)	10-12	10-12	12-14	12-14	*	*	*
		Manpower (men/shift)	10	10	10-12	10-12	*	*	*
		Cutterhead - Power (kW)	1.000-1.300	1.300-1.500	2.500-3.500	4000-5000	*	*	*
		Cutterhead - Torque (kNm)	1.000-1.500	1.500-2.000	4.500-6.000	15000-25000	*	*	*
		Nominal Thrust (kN)	4.500-5.500	15.000-20.000	25000-35000	35000-50000	*	*	*

Figure 2.22 Proposed suitability and performance range for rock type TBMs.

Taylor & Francis

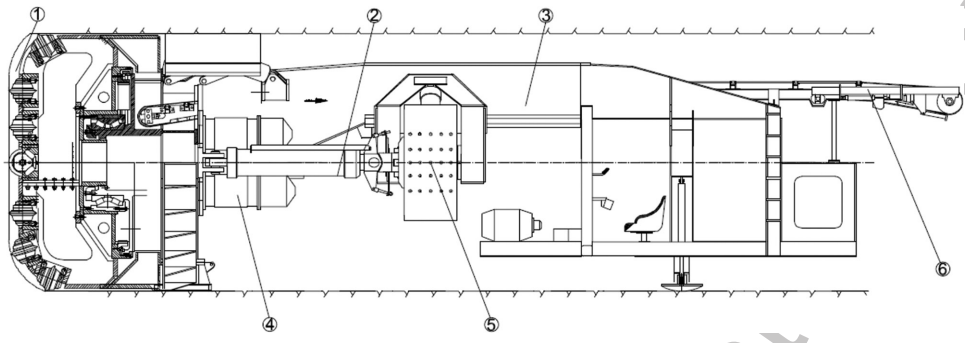

Figure 2.23 Open type TBM with single gripper system "Main Beam Type": 1 cutterhead, 2 thrust cylinders, 3 main beam, 4 main motors; 5 grippers; 6 conveyor.

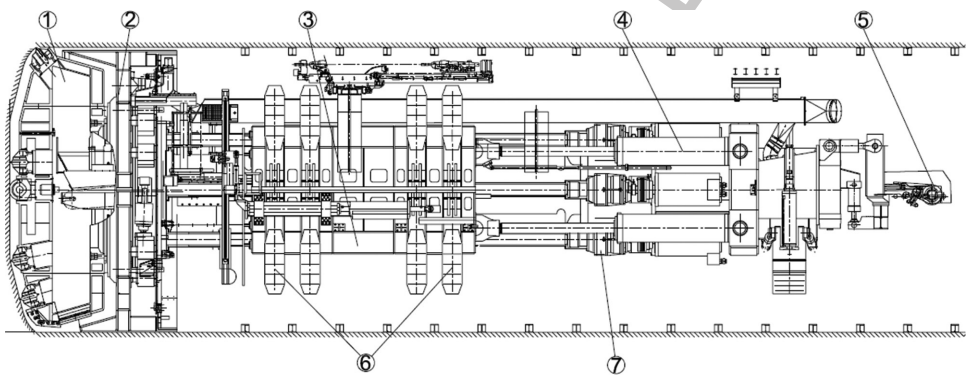

Figure 2.24 Open type TBM with double gripper system "Kelly Style": 1 cutterhead; 2 cutterhead support; 3 main body; 4 thrust cylinders; 5 conveyor; 6 grippers.

being capable to transmit the thrust generated directly and entirely on the structure containing the main drive shaft of the cutterhead.

When the excavation is performed through formations that may present instability phenomena, it is advisable that open TBMs, whatever their construction type, are equipped with facilities for the installation of temporary supports immediately behind the cutterhead support; these supports should also be installed according to an appropriate distance between centres, so as not to interfere with the anchoring device pads.

2.5.1.1.1 OPEN TYPE TBM BORING CYCLE

The excavation cycle, similar for both types of open type TBMs, can be described as the succession of the following operations, and it is summarised in Figure 2.25:

1. the excavation cycle starts with the gripper pads expanding against the tunnel walls. The TBM is now properly aligned and the cylinders of the rear support

T&F Proofs – Distribution

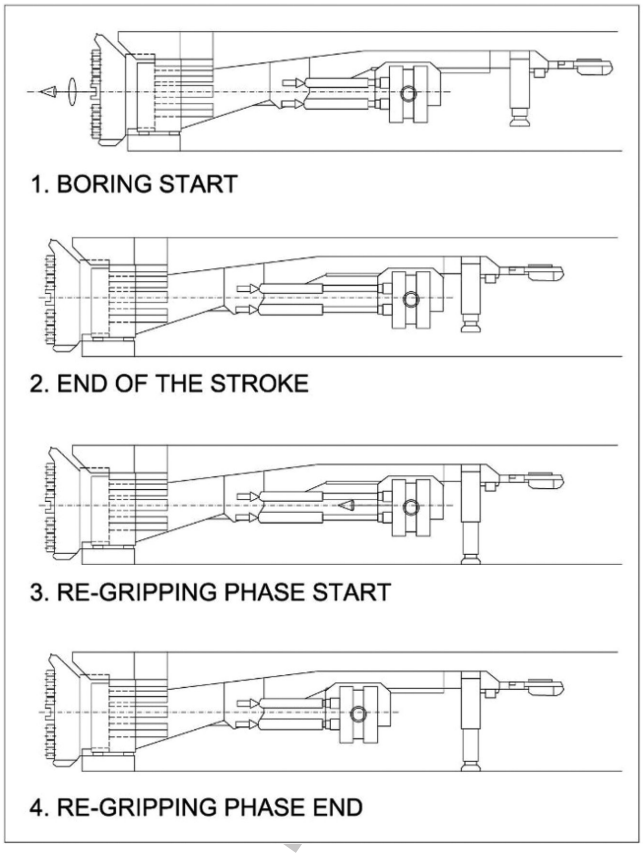

Figure 2.25 Open type TBMs boring cycle.

device are retracted. The cutterhead motors are activated along with the main thrust cylinders until the excavation stroke is completed;
2. at the end of the excavation stroke, the cutterhead rotation is halted and the cylinders of the rear support device are extended;
3. at this point the so-called "re-gripping" phase begins, in which the gripper pads are retracted and the gripper device structure is advanced for a length equal to the excavation stroke, by withdrawing the main thrust cylinders' rods;
4. once the main thrust cylinders are retracted and the anchoring device brought forward, the gripper pads are again expanded against the tunnel walls, the rear support device is raised and the TBM is now able to resume the boring cycle.

2.5.1.2 Shielded type TBMs

The shielded TBMs, unlike the open types, are characterised with one or more protection shields located immediately behind the cutterhead.

T&F Proofs – Not for Distribution

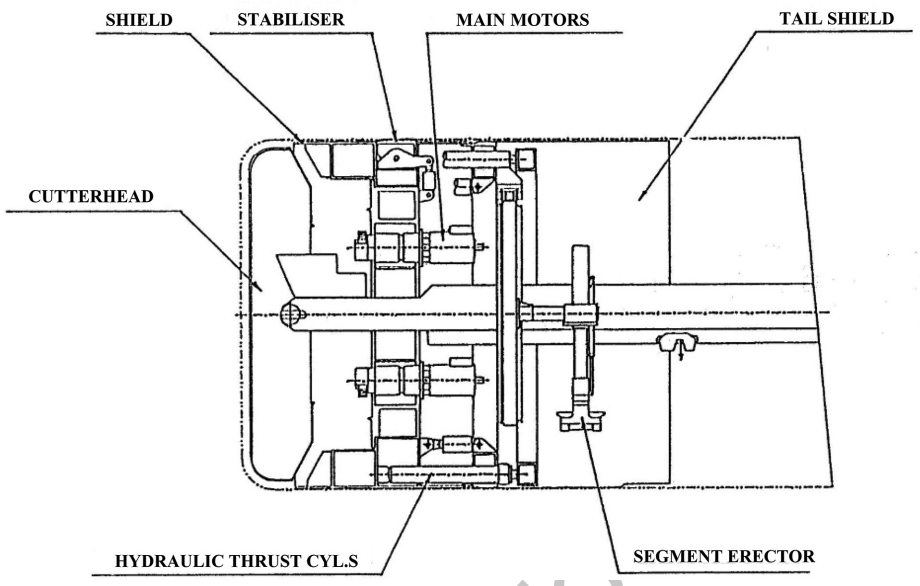

Figure 2.26 Single shield type.

The function of these shields is to provide protection to the equipment and personnel involved with the excavation operations, as well as to offer some temporary support to the excavation in unstable rock formations and depending on the construction and functional characteristics, the shielded machines are distinguished in single-shielded and double-shielded TBMs.

The single-shielded machines are, the simplest from a technical-constructive point of view, but also the least flexible in terms of the type of lining that can be adopted, as their use requires the installation of pre-casted segmental lining. As shown in Figure 2.26, the TBMs of this type consist of a cutterhead and a shield that contains the cutterhead support, the stabilizers, the cutterhead drive unit, the conveyor belt, the thrust cylinders and the segments erector.

The segments erector is hydraulically driven and equipped with a manoeuvring system equipped with speed control and a vacuum clamp and is able to articulate both rotational movements and, vertical and horizontal planes to guarantee a correct installation of the segments.

As regards the operating principle, the mono shielded machines, not being equipped with any gripper system, advance by pushing the cutterhead by a series of hydraulic cylinders that contrast with the segment ring. It is important to note that the need to counteract the thrust, necessary for the advance of the machine, on the prefabricated lining segments does not allow the installation of the segments themselves simultaneously with the excavation, these can only be installed at the end of the excavation stroke after retracting the rods of the hydraulic thrust cylinders.

TBM guidance is monitored by an electronic system that provides the operator, continuously and in real time, with information regarding the position and inclination of the machine in relation to the designed tunnel alignment; on the basis of the

T&F Proofs - Not for distribution

information provided by the guidance system, the machine operator, by varying the hydraulic flow to the main thrust cylinders, is able to correct, rapidly and continuously, any deviation from the theoretical design alignment, with no reduction the level of thrust on the cutterhead.

The double telescopic shield TBMs represent the most significant step forward in the field of mechanised full section excavation of tunnels in rock masses. These machines can perform the excavation in the widest range of geotechnical conditions, with a high standard of safety for the personnel, enabling, if necessary, the installation of temporary supports or pre-casted segmental lining, concurrently with the excavation, guaranteeing high production rates and better managing in difficult ground conditions.

The first example of a double telescopic shield TBM was designed in 1972 by Carlo Grandori, founder of SELI Company, and was manufactured by Robbins, for the construction of two tunnels in the Sila mountains in Calabria (Italy), in a granitic rock mass characterised by extreme variability in terms of geological conditions and mechanical strength of the rock materials. These tunnels, totalling 8.200 m in length, were driven in rock masses almost always at the limit of stability in the presence of intense water inflows (20–30 ls^{-1}) with an average monthly production of about 350 m. As shown in Figure 2.27, a double telescopic TBM type consists of a cutterhead, a forward shield, a telescopic shield, a rear shield, which contains the gripper device, and in whose tail, when required or necessary, temporary supports or pre-casted concrete segments are erected by means of a segment erector.

The *forward shield* is connected to the rear one through the main thrust cylinders; it contains and supports, the cutterhead, the cutterhead support, which contains the bearing, the ring gear and the gearmotors, and holds the first section of the muck conveyor. In the upper quadrant of the front shield a stabilising system, consisting of

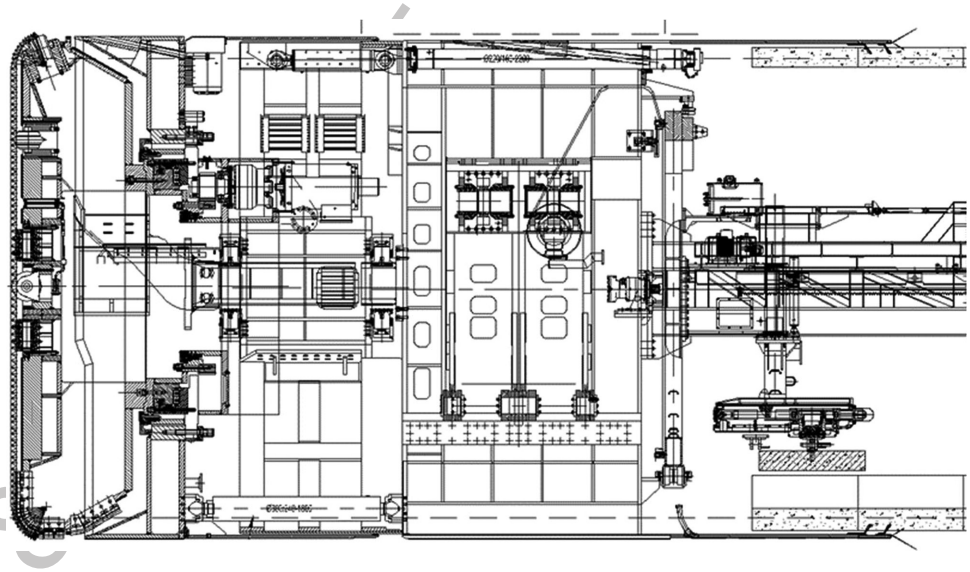

Figure 2.27 Example of a double shield type TBM.

AU: Figure 2.27 and 2.28 are identical. please check and provide update figure

Taylor & Francis - Not for Distribution

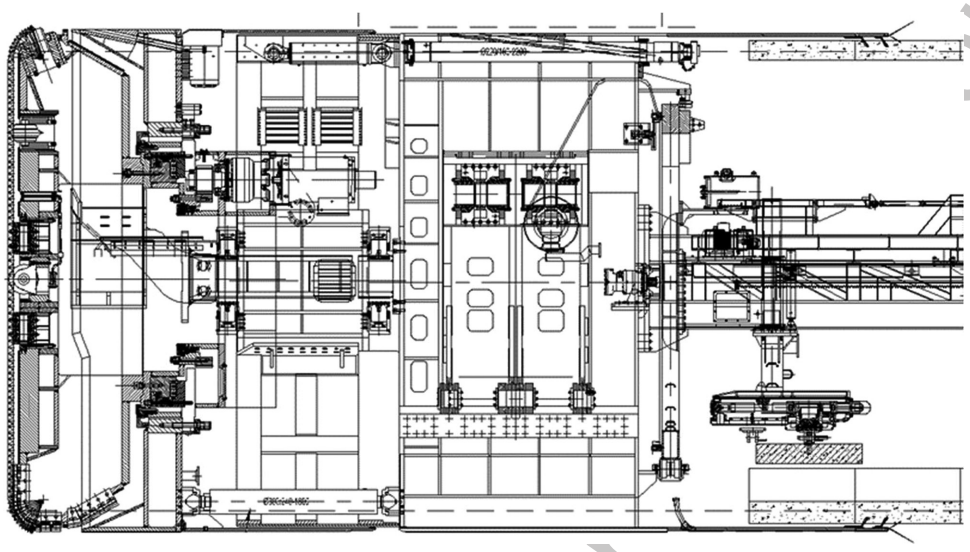

Figure 2.28 Detail of the shields arrangement in a double shield TBM.

hydraulic cylinders that expand gripping pads against tunnel walls in order to stabilise the machine during the driving, is located; this system is very useful in hard rock excavation since it could provide an efficient mean to reduce vibrations and can also be used during the re-gripping phase. To prevent the fine material, produced during the excavation, to enter between the front shield and the tunnel walls in the invert sector area, it is good practice to equip this shield with appropriate scrapers that, while the shield advances during the excavation, push forward the accumulated fine material towards the area where the cutterhead buckets can collect it.

The *telescopic shield* is connecting the front shield (outer telescopic shield) with the rear shield (inner telescopic shield), it enables the front shield to advance during excavation, providing protection to the equipment located in the telescopic shield area while the main thrust cylinders are extended, and to keep the rear shield stationary, thus permitting the erection of the pre-casted lining segments or temporary supports when segmental lining is not foreseen, simultaneously with the excavation (Figure 2.28).

The telescopic shield is also equipped with an anti-torque device, which allows the reaction caused by the torque of the cutterhead to be transmitted from the front shield to the rear shield, thus correcting the relative rotation between the shields themselves. It should be noted that for operational reasons it is good practice that the telescopic shield is equipped with inspection windows of adequate size that allow, in addition to cleaning any material accumulated between the shield and the excavation walls, the relieve of pressure applied by the material weighing on the shield in the event of crossing highly unstable formations.

The rear shield, also called grippers shield, supports the gripper mechanism, the auxiliary thrust cylinders and the segments erector. The forces generated by the

T&F Proofs – Not for

gripper system's cylinders are transmitted to the tunnel walls by means of suitably sized pads placed on the sides of the rear shield, which transfer their gripping action through slots obtained in the shield itself. Since the heads of the main thrust cylinders connect the front shield with the rear one, the latter reacts to the thrust and torsion forces transmitted by the main cylinders themselves.

The auxiliary thrust cylinders keep the pre-casted segments rings during the rear shield advance phase, but they can also be used, in adverse rock mass conditions, to provide the necessary reaction to the forces generated by the main thrust cylinders by pushing against the segmental lining previously erected.

In conclusion, the characteristics of the double shield TBM can be summarised as follows:

- in rock masses characterised by a long self-sustaining time and with high values of the mechanical characteristics of the rock material, the DS TBM advances using the pads of the gripper device to contrast the thrust;
- when required by design, or when the rock mass geotechnical conditions make it necessary, this type of machine can install prefabricated lining segments or temporary supports concurrently with the excavation;
- in rock masses characterised by adverse geotechnical conditions, the double-shielded machines can advance, by reacting to the advance thrust, by thrusting off with auxiliary cylinders, against the segmental lining or suitable temporary supports; obviously in this case not concurrently with the excavation.

The boring operations in the double-shielded TBM can be performed using two distinct techniques:

- When boring through rock masses with favourable geotechnical conditions and the gripper can be used. The cycle is the following: once the rear shield is anchored to the tunnel walls by means of the gripper device, the cutterhead and the front shield advance during excavation pushed by the main thrust cylinders for a length equal to the stroke of the cylinders themselves. At the end of the excavation stroke, the gripper pads are retracted and, by means of the auxiliary thrust cylinders, the rear shield is pushed forward while the main thrust cylinders are retracted, thereby closing the telescopic shields and therefore tacking the rear shield close to the forward shield; at this point the excavation cycle can be resumed.
- When the rock masses have unfavourable geotechnical conditions with respect to the mechanised tunnelling excavation, it will be possible to proceed with the excavation using the auxiliary thrust cylinders thrusting against the pre-casted segmental lining instead of the gripper device, which, in this case, shall be kept completely closed (as in the single-shielded process). The two unfavourable conditions are of extreme mechanical behaviour:
  - when they are such that the gripper pads sink into the tunnel walls, thus not able to provide the necessary contrast for the advancement of the TBM;
  - when the rapid development of convergence phenomena is so accentuated that the use of the grippers could induce a bearing of material around the gripper pads, preventing their closure at the end of the excavation stroke.

T&F Proofs – Not for Distribution

When working is in the single-shielded process, the heads of the auxiliary thrust cylinders must be equipped with suitably sized plates and generally coated in anti-wear plastic material, both for an optimal distribution of the thrust and to ensure adequate contact friction with the pre-casted segments, which must be sufficient to prevent the rear shield from rotating, thus ensuring normal excavation tolerances. This method of proceeding with the excavation, which, in any case, allows the machine to be guided with the required precision, has a completely different production cycle from that typical of excavation in "favourable" conditions; it does not allow simultaneous excavation and installation of the temporary supports or the pre-casted segmental lining.

It is interesting to mention that, both in favourable and unfavourable rock mass conditions, it is good practice to use the stabilizer device located in the front shield, having care; however, to accurately adjust the stabilizers cylinders circuit pressure in accordance with the encountered rock mass conditions, which if excessive, could negatively influence the TBM advance progression.

Again with regard to adverse geotechnical conditions and with particular reference to the convergence phenomena, it is useful to observe that when these are such as to induce severe pressure on the rear shield during the re-gripping phase, it is recommended to proceed with the excavation by adopting the following precautions:

- perform the excavation in strokes with a shorter length than that of the complete stroke;
- perform the re-gripping by the combined action of the auxiliary cylinders (thrust action) and the main thrust cylinders (pulling action) taking care, if necessary, to gradually and in a controlled manner increase the pressure limits in the auxiliary thrust circuit.

2.5.1.3 TBM main components

The most relevant components of a TBM are shortly discussed.

Cutterhead: it consists of a steel box-like structure, built in sectors, bolted or welded together, or for small diameters in single piece, in which the mucking-out buckets are located in the peripheral section of the cutterhead itself; the first constructive solution involves undoubted advantages for transport to the construction site and simplifies the assembly and disassembly of the TBM, especially in cases where these activities are performed underground (Figure 2.29).

Modern cutterheads are generally equipped with heavy duty steel front plate, which allows, in the presence of unstable face conditions, to prevent the face collapse and thus additional loads to the cutterhead that may create advance difficulties (Figure 2.30).

The cutterhead structure frequently incorporates the water-spraying system for dust suppression and also for disc cutters cooling; this system can, with simple modifications, enable the utilisation of polymeric foams instead of water may reduce the risk of clogging, especially when the muck is particularly rich in very fine material.

The actual excavation action is performed by a series of disc cutting tools (usually called cutters), which are mounted on the cutterhead by means of appropriate mounting saddles; those saddles are designed to enable the replacement of the cutters either

T&F Proofs – Not for Distribution

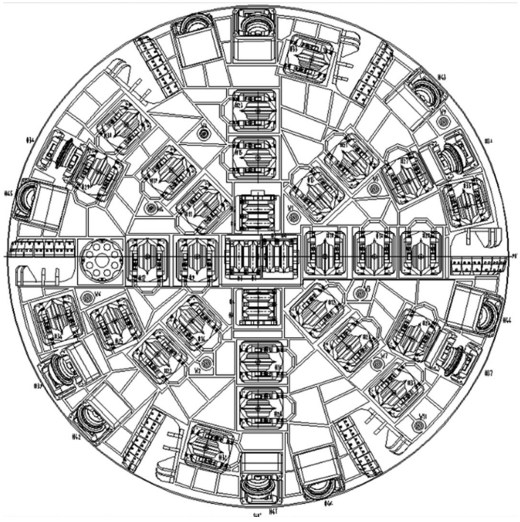

Main Items	Data
Excavation Diameter	7.170 mm
Center cutters size & type	17" ; twin discs
Center cutters q.ty	4 pc.
Face and gauge cutters size	632 mm (19")
Face cutters q.ty	27 pc.
Gauge cutters q.ty	11 pc.
Over cutter	1 pc.
Bucket quantity	6 pc.
Wear plate	Hardox+Alloy
Water Nozzle qty.	10 pc.
Partition	2 parts
Total weight	~140 t

Figure 2.29 Example of a back loading type cutterhead design.



Figure 2.30 Detail of the front plate and wear protection.

from the face (front loading-type cutterhead) or from inside the cutterhead chamber (back loading-type cutterhead).

The cutterhead should be designed for both conditions of operation, in very abrasive and hard rock types as well as for operation in heavily fractured and weathered rock masses. To obtain such "universality", it is necessary to design the cutterhead with a geometrically flat profile, therefore with a limited axial dimension, equipped with protective front plate, from which the cutters do not protrude by more than 120 mm.

For safety reasons, especially when the excavation is expected to be performed predominantly in unstable ground conditions, it is also necessary that the cutterhead is equipped with cutters mounting saddles that enable the replacement of worn cutters from inside the cutterhead structure known as "back-loading type" cutterhead.

T&F Proof for Review Only

Another important feature is the device for controlled over-excavation (65–80 mm on the radius), useful in rock masses where the risk of rapid development of the convergence of the tunnel walls is expected to be severe. A special feature, rarely adopted, is the adoption of hydraulically driven or mechanical systems to vary the opening size of the cutterhead buckets that could be useful where running ground is expected along the tunnel alignment.

The buckets must be extended till the edge of the front shield to avoid the accumulation of fine materials which, if not collected by the buckets, are compacted by the cutterhead on the tunnel walls, forming a layer that in case of double shielded machines may block the inner telescopic shield during the re-gripping phase because of the reduced gap available between the excavation and the shields.

Regarding the nominal diameter, defined as the diameter of the cutterhead equipped with new cutters, it is necessary that it results greater than the design excavation diameter by at least 30 mm also depending on the displacement, hence slightly higher than the maximum allowable cutters wear on the radius (Figure 2.31).

The cutters spacing on the cutterhead varies according to their diameter and ranging from 77 to 100 mm, respectively, for 431.8 mm (17″) and 482.6 mm (19″) cutter rings (Figure 2.32).

It should be noted that the optimum cutter spacing has to be determined by performing the analysis of the Specific Energy required to excavate a unit volume of rock for a given depth of instantaneous penetration, however this analysis should consider for the hardest rock material expected along the tunnel alignment.

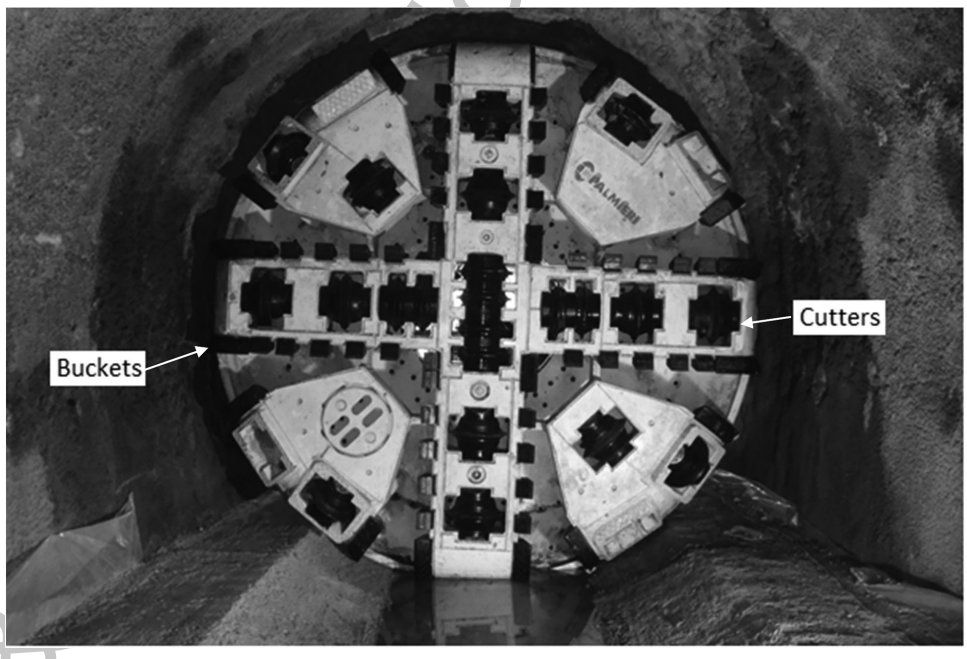

Figure 2.31 Front loading type cutterhead adopted for the excavation of a tunnel in variable conditions through soft Siltstone and hard and abrasive gneiss in Algeria.

T&F Proof not for Distribution

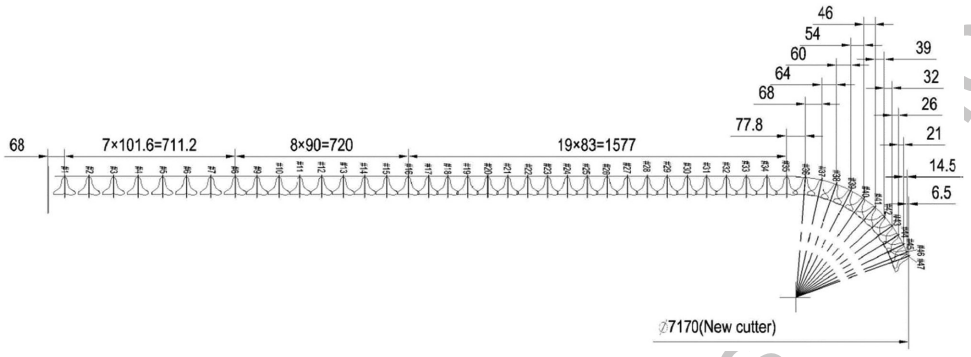

Figure 2.32 A typical cutterhead for hard rock TBM with flat profile. (Courtesy of CREG.)

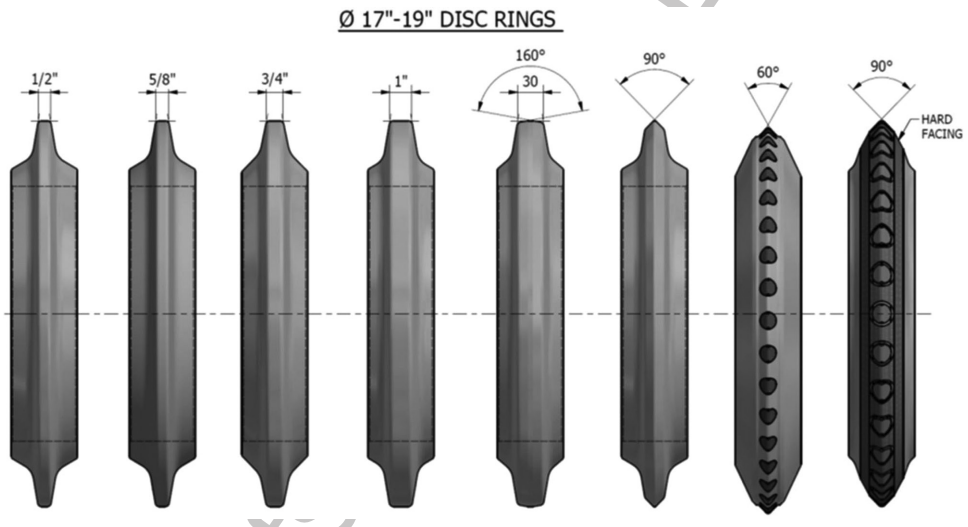

Figure 2.33 Different cutter types. (Courtesy of Palmieri SpA.)

Cutters: The disk cutters generally have a self-sharpening profile, with thicknesses, measured on the edge of the cutter, ranging from 12 to 30 mm. The smaller thickness is suitable for excavation in rocks characterised by high-strength values and low percentage of abrasive minerals, such as quartz or feldspar, while the greater thickness is used for excavation in hard rocks with and abundant presence of abrasive minerals (Figure 2.33).

When the excavation is performed in rocks of medium-low mechanical strength, regardless of the percentage of presence of abrasive minerals, it is preferable to use cutters with greater thickness at the tip.

As regards the diameter of the disk cutters, the market basically offers two possible solutions 17″ (431.8 mm) or 19″ (482.6 mm) while some applications in very abrasive quartzite, cutters with a dimeter 20″ (508 mm) of has been developed (Figure 2.34).

T&F Proof Discussion

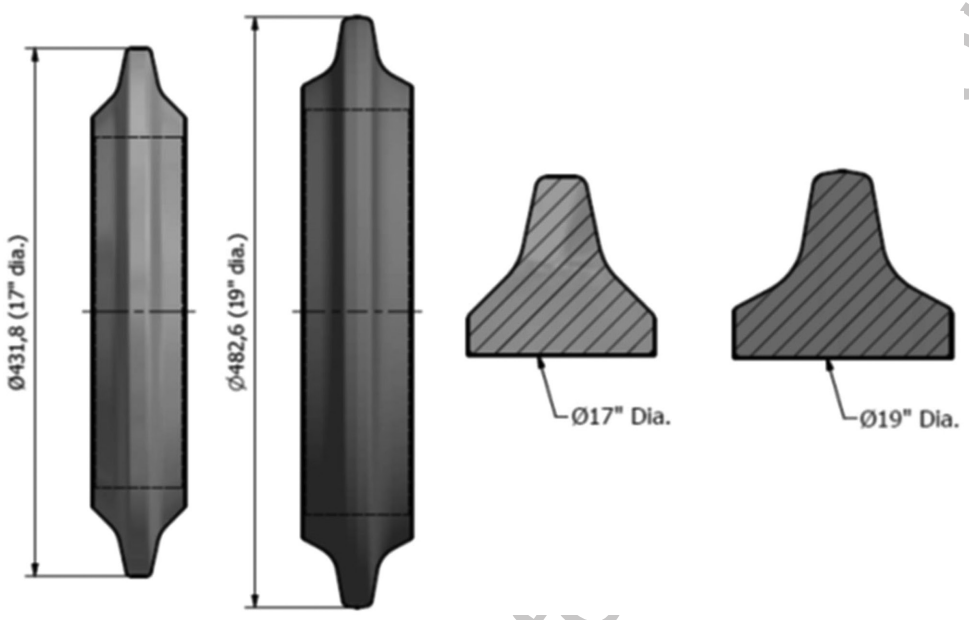

Figure 2.34 Different disk cutters size.

The ring cutter diameter selection depends on the mechanical and abrasive characteristics of the rock material since, as the diameter increases, for the same rock material strength and abrasiveness, the penetration capacity increases and the wear of the cutter, given the greater circumference and utilisable cross section, decreases, with a consequent increase in the average productive life.

It should be noted that in high-strength rocks, the minimum recommended disk cutter diameter is 431.8 mm, since smaller diameters would not allow for adequate thrusts with consequent boreability problems. The higher average production life of the disk cutters with a diameter of 482.6 mm, guarantees, in abrasive and hard rocks, a smaller number of cutters replacements per cubic metre of excavated material and consequently a greater utilisation coefficient and lower operating costs.

In case of soft rocks, disk cutters with a larger diameter can still be used, especially when the percentage of abrasive minerals is high, even if a greater diameter may not correspond to an increase in performance since other factors, such as the available torque or the handling capacity of the TBM conveyor belt, constitute a limit to the penetration (Figure 2.35).

Depending on the material with which the cutting tools are made, they can be distinguished in standard or heavy duty types.

The difference between the two types lies in the steel alloy used, with a higher manganese content used for the heavy duty type, and in the heat treatments to which the disk cutters are subjected during the manufacturing phase.

From a functional point of view, heavy duty disk cutters are characterised by greater wear resistance, as a result of the higher degree of hardness over the entire thickness; on the other hand, but it has to be proven, this type of cutting edge

T&F Proofs - Not to

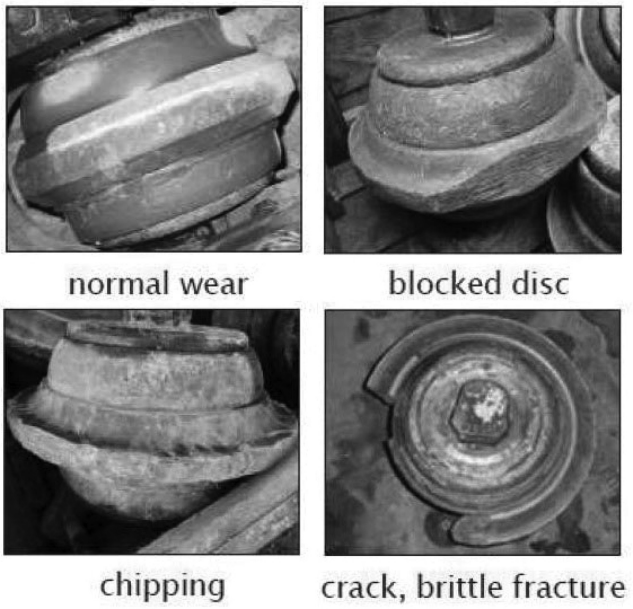

Figure 2.35 Example of disk cutters wear.

should be more subject than the standard type to breaking phenomena, in fractured rock formations and/or in the presence of mixed face conditions, due to their greater fragility.

Considering the considerable price difference between the two types of disk cutters, the experience suggests to adopt the heavy duty type only in the presence of highly abrasive and hard rocks, where the standard type would not allow to maintain good penetration and would cause an excessive frequency of cutters replacement on the cutterhead.

In rocks with very high strength, the use of disk cutters equipped with one or two rows of tungsten carbide inserts has been experimented in several occasions, but not always with satisfactory results given their limited longer duration compared to high cost, even though for the excavation in extremely abrasive and hard rocks, they may represent the only solution to reach an acceptable penetration rate (Figure 2.36).

Another characteristic parameter of the disk cutting tools is the maximum net thrust that can be applied; the applicable thrust is ranging between 245 and 320 kN for 17″ and 19″ disk cutters, respectively.

Experience suggests, in the design phase of the TBM, to carefully check that the cutters selected are able to apply, withstanding its mechanical stresses, net thrusts on the cutter head sufficient to make the cutting tools properly work.

For the support rollers of the disk cutting tools, there are two construction types according to the type of bearings used for their construction. The cutter assembly can be made using double cylindrical, axial and radial roller bearings, or using tapered roller bearings; nowadays, the second typology is the most adopted one (Figure 2.37).

T&F Proofs – Not for Distribution



Figure 2.36 Special disk cutter with tungsten carbide inserts for extremely abrasive and hard rocks.

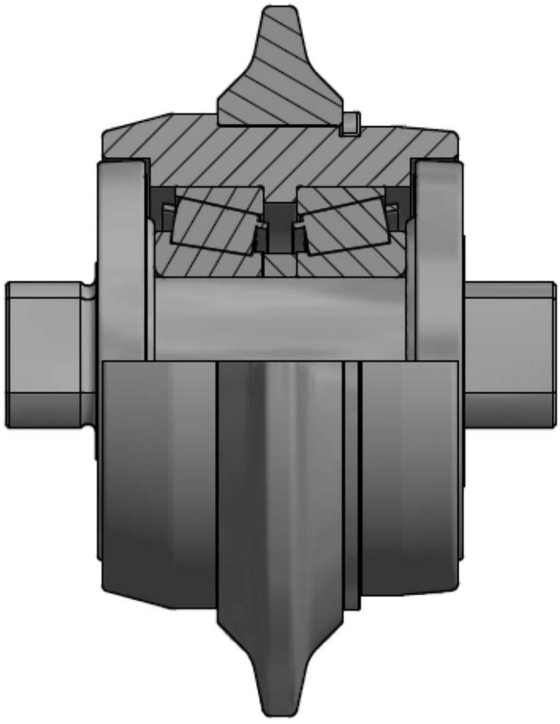

Figure 2.37 Example of cutter assembly with tapered roller bearings.

T&F Proof not for distribution

The lubrication of the bearings can be performed adopting synthetic oils or with greases, also with a synthetic base, capable of working at very high temperatures. Moreover, in case of very hard rocks, experience has shown undoubted advantages in the use of special greases for lubricating the cutter assembly bearings.

The cutterhead is supported by the structural element of the machine which supports the cutterhead to which, it is connected, by means of a series of suitably tensioned bolts and contains the main bearing and the bull gear and the main thrust cylinders, as well as supports the gear reducers and the main motors.

In the open-type machines, the cutterhead support is generally equipped with a shield consisting of elements bolted together that, although not completely surrounding the support itself, guarantees a certain protection of the frontal area of the machine against any falling rock material; this shield could be expanded against the excavated surface by means of hydraulic cylinders to provide improved machine stability during the excavation.

Gripper system: as a whole, this device is composed of a series of hydraulic cylinders, which expanding against the lateral surface of the tunnel the suitably sized pads, allows to obtain the necessary contrast to the forces generated by the main thrust cylinders during the cutterhead advance phase (Figure 2.38).

Hydraulic thrust cylinders: They provide the total advance thrust, that is, the sum of the cutterhead thrust needed to excavate the rock mass and that needed to overcome the friction that the machine encounters during advance.

The cylinders used for this purpose are of the double-effect type, which means that the pressure can be applied both on the rod side and on the cylinder side; generally during excavation, the pressure is applied from the cylinder side, while the pressure is applied on the rod side when, in order to perform an inspection of the excavation face, it is necessary to pull back the cutterhead at the end of a stroke.

Main drive unit: The rotation of the cutterhead is driven by electric motors, equipped with hydraulically operated clutches and coupled to the main gear through mechanical gearboxes.

The gearboxes are coupled to the main gear through pinions housed in the cutterhead support structure and are equipped with the same lubrication system utilised for the lubrication of the main bearing.

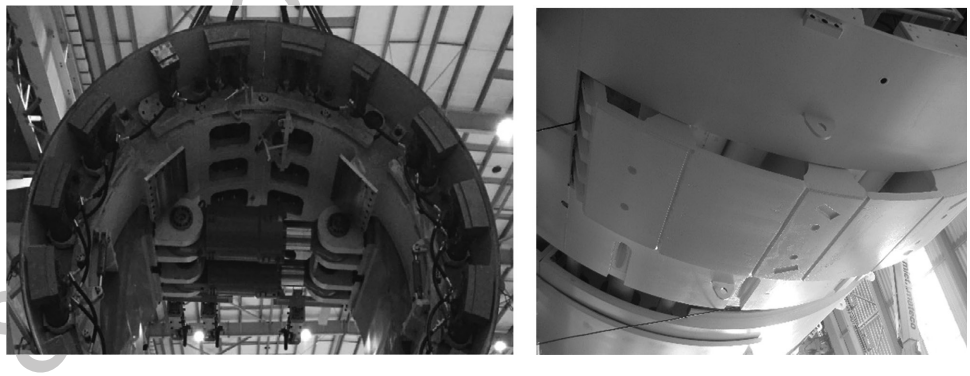

Figure 2.38 Gripper system cylinders and gripper pads.

Taylor & Francis – Not for Distribution

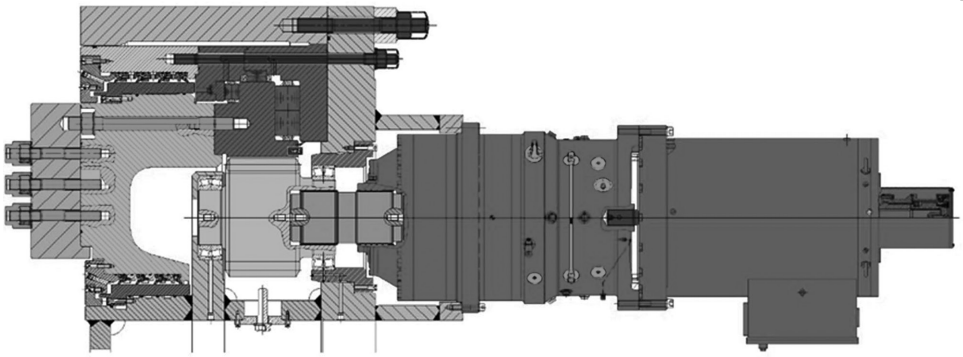

Figure 2.39 Schematic example of the main motor-gearbox-pinion and bull gear.

Electric motors: The electric motors are of the three-phase alternating current type, cooled with water circulation and suitably sealed to avoid the entry of dust and water, always present in underground environments during excavation, and also equipped with a low-voltage heating circuit to prevent undesired condensation phenomena during periods of downtime (Figure 2.39).

It should be noted that, while, on the one hand, an hydraulic system for the rotation of the cutterhead would guarantee the possibility of continuously varying the angular rotation speed of the cutterhead, the use electric motors has a great efficiency, compared to a hydraulic system, as well as a lower development of heat, always undesirable in underground confined spaces and finally because the same benefits obtainable from a hydraulic system in terms of variation of the angular speed and torque may be obtained by the adoption of frequency variators. It is important to mention that, in the case of cutterhead blockage, due to adverse geological conditions, the drive unit can be used to provide the cutterhead with the maximum applicable torque value; this is achieved, when the motors are not equipped with frequency variators, by bringing the motors and clutches, not engaged with the gearboxes, to maximum rotation speed and then instantaneously engaging the clutches. The high rotational inertia of the motor-clutch units is thus transmitted in a few seconds to the cutterhead, causing the unlocking of the cutterhead. If the cutterhead is not unlocked in a few seconds, the system must be designed to automatically decouple the clutches from the gearboxes in order to prevent serious damage to the drive unit. To allow accurate positioning of the cutterhead during maintenance and the replacement of worn cutters, the cutterhead drive system must be equipped, when the drive unit is not equipped with frequency variators, with a hydraulic system for slow rotation of the cutterhead itself known as inching drive. This system includes a hydraulic motor, coupled with one of the main electric motors, and a brake that keeps the cutterhead locked in the desired position, when the hydraulic motor is not operating.

For obvious safety reasons, the rotation and thrust circuits of the cutterhead must be excluded when this slow head rotation system is used; this is performed electrically, as to activate the circuit of the slow rotation hydraulic motor, it is necessary to use the activation key of the main driving console, therefore, by removing this key from the main control panel, all the controls and the respective systems remain deactivated.

T&F Proofs - Not for Distribution

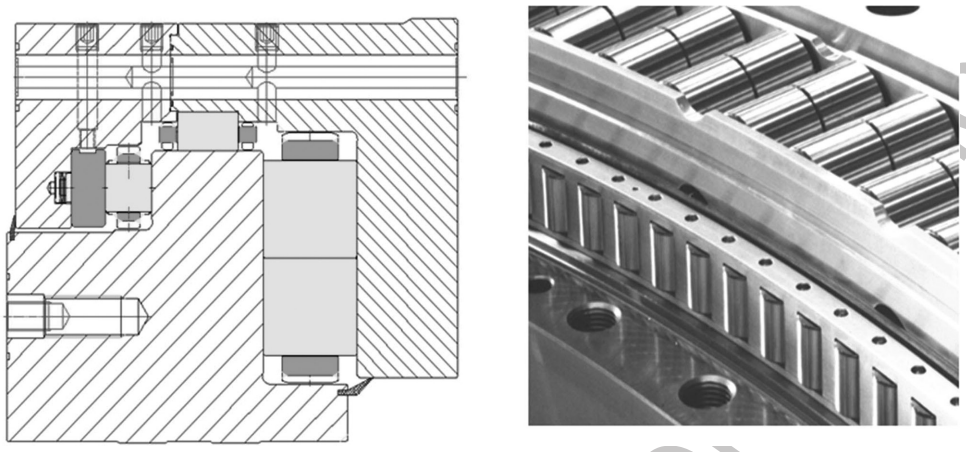

Figure 2.40 Example of the main bearing bi-axial type.

Nowadays, in most modern TBMs, equipped with a frequency variator for the main motors, the inching drive system is not necessary even if the safety brake must always be present to keep the cutterhead locked during maintenance.

Gearboxes: The purpose of the gearboxes is to reduce the rotation speed of the main electric motors to a value compatible with the rotation of the cutterhead; they are generally of the planetary type with multistage reduction with internal oil-bath type lubrication.

The reduction ratio generally varies between 20:1 and 25:1, therefore, considering the typical rotation values of the main motors, a further reduction in speed is required, this occurs through the main gear-pinion coupling.

Main bearing: It is the most important mechanical element of the drive unit since its failure would result in a major downtime, of the order of several weeks, for its replacement, with consequent very high direct and indirect costs. The main bearing reliability is therefore of fundamental importance and depends on the correct sizing, which must be done by correctly determine the longitudinal and axial loads to which it will be subjected during the boring activity (Figure 2.40).

Another aspect of fundamental importance in the selection of the type and size of the main bearing concerns its durability, or its operating life, which decreases exponentially as the thrust exerted on the cutterhead increases.

As regards the construction type of the bearings used for TBM manufacturing, we can, in principle, state that for small diameter machines, capable of maximum thrust to the cutterhead of the order of 7,000 kN, double-cons roller type bearings may be adopted, while for large diameter machines or for those capable to transmit maximum thrust to the cutterhead, greater than the value indicated above, bi-axial type with multiple rollers should be adopted.

Lubrication and bearing chamber sealing systems: Consists of the lubrication system, which provides a continuous circulation of lubricating fluid to the main bearing, the main gear and the pinions, a lubrication monitoring system and a series of sealing gaskets which have the dual purpose of preventing leakage from the main bearing chamber and the ingress of dirt and water into the chamber itself. The lubrication

T&F Proofs – Not for Distribution

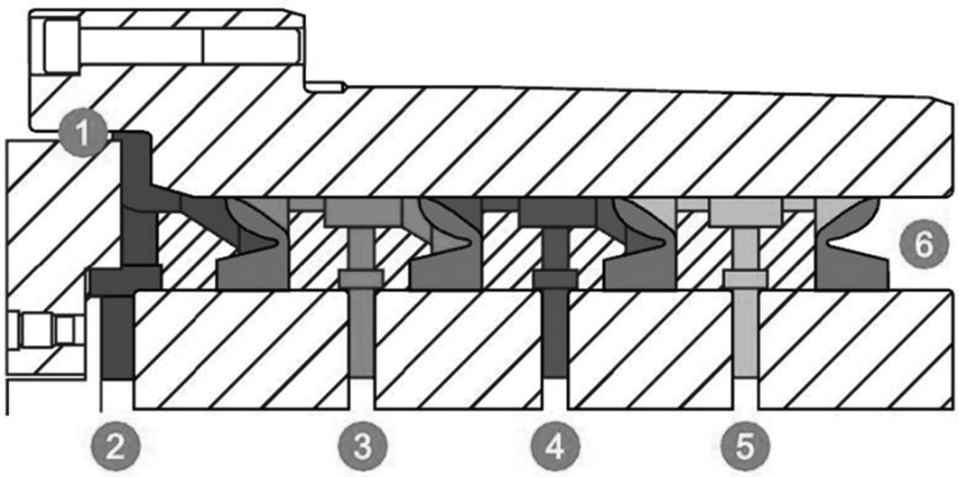

Figure 2.41 Example of standard sealing system: 1&2 HBW (lubrication grease); 3 EP2 (lubrication grease); 4 Lube oil; 5 tightness chamber; 6 Bearing chamber.

system includes the fluid tank, the delivery pump, the filters and the suction pump to recirculate the lubricating fluid accumulated in the main bearing chamber, as well as pressure switches, flow metres and others sensors that allow continuous monitoring of the pressure, flow, level and temperature of the lubricating fluid. On the return circuit there is always a magnetic filter which, by retaining any metal particles, allows to avoid their recirculation in the system, also providing useful information on the conditions of the bearing-crown-pinion group. The system is also equipped with an exclusion circuit that stops the main motors in the event of any malfunction of the lubrication system. The sealing system consists of gaskets, spacer rings and sealing rings installed in order to obtain an adequate seal of the main bearing chamber.

The gaskets, separated by spacer rings, which also have the function of providing the lubrication for the gaskets themselves, are mounted on the non-rotating parts of the structure and have lips that seal on the rotating parts (Figure 2.41).

To prevent direct contact between the gasket lips and the main rotating structure, adjustable sealing rings made by non-ferrous metal alloy, commonly known as "saw blades", are shrunk or bolted onto the rotating structure.

For the lubrication of the gaskets, which would otherwise be seriously damaged in a short time, it is possible to use both mixtures of hydraulic fluid and water and/or special greases delivered by means of a pumping and distribution systems.

TBM mucking-out conveyor: The purpose of the machine conveyor is to deliver the excavated material from the muck hopper, positioned inside the cutterhead, to the back-up conveyor and then on to the tunnel conveyor belt if utilised or another transport medium.

The main structure of the conveyor, which can be hydraulically retracted, to allow easy access to the cutterhead, consists of a frame that supports the drive drum, the return drum, and the belt tensioning cylinders and also supports the return rollers of the belt.

T&F Proofs – Not for Distribution

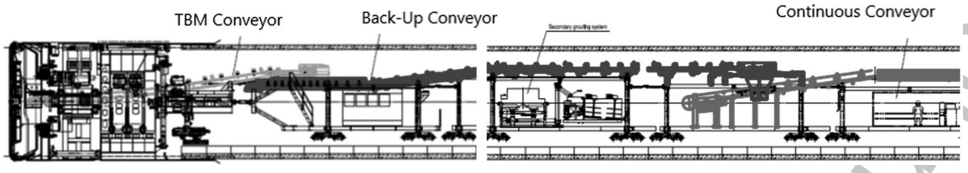

Figure 2.42 Scheme of muck conveyors system.

The conveyor belt is driven by hydraulic motors, and therefore, the speed of the belt can be varied to suit the quantity of material to be handled by the belt itself (Figure 2.42).

It should be noted that in the open-type TBMs with double anchoring system, the belt frame has no containment structure and is positioned in the upper part of the machine; therefore, it is easy to access for cleaning and maintenance, but, on the contrary, its position limits the space available for the installation of temporary supports, especially in the case of small diameter tunnels.

Hydraulic system: All equipment on the TBM, except for the cutterhead drive system, are hydraulically driven; the hydraulic power packs are located on the back-up platforms and consist of electric motors, hydraulic pumps, distribution, check, pressure reduction, safety and flow control valves, tank, magnetic and mechanical filters, fluid cooling system and systems for plant monitoring.

The electric motors are engaged to the hydraulic pumps, with fixed or variable flow, high or low pressure, depending on the circuit they feed and are generally all powered by gravity from a common tank; the pressure side of the pumps is protected by check valves which isolate them from pressure backlashes, while suitable electric interlocks stop the electric motors of the pumps when the level of hydraulic fluid in the tank is insufficient, in order to avoid cavitation phenomena.

The connections with the utilisers (cylinders, hydraulic motors or pumps, etc.) are mainly made with high-pressure flexible hoses because of their greater simplicity of installation or replacement, and for their ability to absorb rapid pressure variations in the circuit; all TBM's hydraulic functions are controlled from the main control panel located in the operator control room.

Electric system: The electric power is supplied to the TBM at rated voltages ranging from 5 to 15 kV, by means of a three-pole flexible electric cable of suitable section and degree of insulation, which connects the main machine transformers with the construction site main power supply transformers and distribution station.

The TBM transformers are equipped with appropriate breakers on the primary side and with voltage variation control device, which intervene when the voltage variations exceed a pre-established limit (generally 5% of the rated voltage value); they are located on the back-up platforms along with the main electric substations (Figure 2.43).

The main electrical substations are equipped with protection devices against overcurrent and overvoltage for each of the utilisation circuits; all the metal parts must be suitably connected and electrically earthed.

The circuit of the cutterhead drive motors is electrically separated from the other circuits as these are the major users of the entire system, they could otherwise cause unwanted disturbance or interference phenomena to the system itself. The other circuits

T&F Proofs - Not for Distribution



Figure 2.43 Picture of the TBM transformer and the MV cable reel.

of the electrical system are those to energise the hydraulic and lubrication pumps, the machine control system and the lighting system. In the most modern machines, in addition to the components mentioned above, the electrical system also includes the cutterhead drive motors frequency variators; they enable the operator to change the angular rotation speed of the cutterhead by varying the frequency of the electric current feeding the drive motors.

The possibility of varying the angular speed of rotation of the cutterhead offers enormous advantages, especially when the rock mass to be excavated has a wide range of geotechnical conditions, since as those varies, the torque mobilised during excavation changes (Figure 2.44).

The graph above shows that it is possible to vary the torque applied on the cutterhead without varying the thrust applied on the cutterhead itself, and, therefore, it is possible to optimise the performance of the machine according to the geotechnical conditions encountered during excavation.

Thus, for example, supposing to operate with a certain cutterhead angular rotation speed, in the event that the strength of the rock tends to decrease, it is possible, by maintaining the same thrust on the cutterhead, to decrease the frequency of the electric power supplied to the main motors, thus increasing the torque and obtaining better performance in terms of advancement; vice versa, in the event that the strength of the rock should increase during excavation, it is possible, by increasing the rotation speed of the cutterhead and maintaining the same advance thrust, to decrease the torque, thus obtaining better performance; obviously, in doing this, it is necessary that the maximum rolling speed of the cutters in the peripheral positions is not exceeded. The graph also shows that it is possible to significantly increase the torque value, with respect to the maximum nominal value, obviously for limited time intervals, when the cutterhead is blocked by unstable ground or in rock masses with strong convergences.

It should be noted that in TBMs with cutterheads equipped with a controlled overcutting system, the frequency variators allow the head itself to be turned with very low angular speed values, thus allowing excellent control of the guide and eliminating the risk of damaging the over-excavation system itself. Finally, an additional advantage

T&F Proofs – Not for Distribution

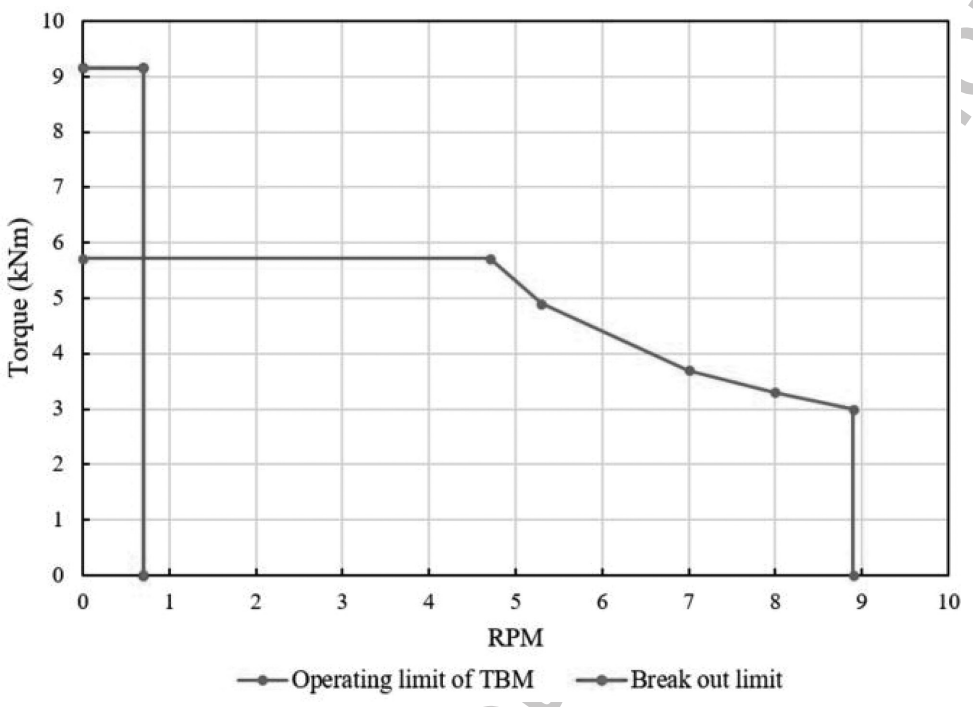

Figure 2.44 Example of limit curve for a given TBM.

offered by the frequency variators is the unnecessary need to change any mechanical component for the transmission of the rotation of the cutterhead when the TBM has to be reused in other projects where the nominal excavation diameter is different from the original one.

Electronic control system: This system enables accurate and real-time control of all functions of the machine by means of a Programmable Logic Controller (PLC).

The advantages that can be obtained with such a system are numerous, not last the possibility to modify the TBM operational functions by only changing the PLC programme without the need to physically install additional electro-hydraulic devices and related interconnections.

The electrical system results simpler and more reliable, as the PLC controls all functions of the hydraulic and electrical systems, with a limited number of cables and connections with a consequent lower risk of malfunctioning.

2.5.1.3.1 THE BACK-UP AND THE AUXILIARY EQUIPMENT

All the equipment necessary for the TBM operations and for the operation of the auxiliary systems are installed on the mobile platforms towed by the machine, referred to as the back-up system as a whole. The mobile back-up platforms can be equipped with a rail track that is extended up to the unloading area of the pre-casted segments or of the tunnel supports and enables the manoeuvres of the trains, when used, for the

T&F Proofs – Not for Distribution

transport of all necessary construction material as well as for the transport of personnel and eventually for the mucking-out.

The back-up platforms carries the following main equipment:

- Segments handling and delivery to erection area system composed of quick-unloading system, gantry cranes and segments feeder;
- Probe-drilling equipment for probing and coring ahead and for consolidation grouting;

  The probing holes shall be drilled through the tail shield with an inclination of at least 10° despite is recommended to design the tail shield in order to have the possibility to drill with two different drilling angles of 8°–10° and 10°–15° for, respectively, probing ahead holes and grouting of the rock mass around the tunnel alignment for consolidation purposes (a sufficient number of probing holes should be foreseen along the circumference of the shield).
- backfilling system to fill up the void behind the segmental lining: generally the annulus void behind the segmental lining is filled by injecting a cement mortar admixture behind the invert segment and pea-gravel in the remaining void (a discussion of the admixtures is reported in this chapter).
- *Mucking-out system*: including the devices for train manoeuvres when the delivery of the segments and for the other construction materials is performed by trains and the back-up conveyors or the continuous tunnel conveyor system;
- ventilation system including secondary booster and suction fans with their flexible ducts, rigid conducts and the ventilation cassette to enable the tunnel ducts extension (a more complete discussion on the ventilation design and scheme is presented in Chapter 6 of Volume 1);
- dust suppression system, consisting of one or more suction fans with the relative ducts, generally provided with openings for cleaning in suitable areas, which suck the dust produced during excavation, directly from the cutterhead, to take them to the dedusting system which can be of the water spray type or equipped with dry filters;
- industrial water supply system for the distribution of the industrial water necessary both for the cooling of the hydraulic and electric equipment and for the cutterhead water-spraying system, consisting of one or more tanks, a pumping system and connection by means of flexible hoses to the main water supply;
- dewatering system, is generally composed of one or more self-sucking centrifugal pumps of adequate capacity to divert the water from the bottom shield directly to the sewage tank and an additional submersible pump to drain the water from the segmental lining erecting area;
- compressed air system necessary for the operation of pneumatic equipment and tools;
- lighting system to provide adequate illumination of the working areas;
- telephone communication system with phones in strategic working points (segment or temporary supports erection area, train or Multi Service Vehicles manoeuvres area, etc.)
- closed circuit television system with cameras installed in proximity of the main working areas;
- automatic fire suppression system: it should be designed in order to guarantee that inside of each electrical cabinet and hydraulic power pack unit, there will be

T&F Proofs – Not for Distribution

enough fire suppression devices. Temperature sensors, located at strategic points inside the sensitive equipment, should activate automatically the fire suppression and the alarm devices. The alarm should be transmitted to the operator control cabin from where the fire extinguishing systems can also be activated manually.

- Gas monitoring system, with sensors for explosives and toxic gases, suitably distributed along the back-up; It is highly recommended to place at least one sensor inside the structure that constitutes the cutterhead and another inside the suction ducts for the "contaminated" air. The explosive gas monitoring system, if the threshold of 20% of the lower explosive limit (LEL) value is exceeded, automatically interrupts the electrical power supply of the equipment, guaranteeing the operation of only the lighting, ventilation, dust suppression, telephone and any others for personnel safety, which must therefore be of the explosion-proof type (Figures 2.45–2.51).

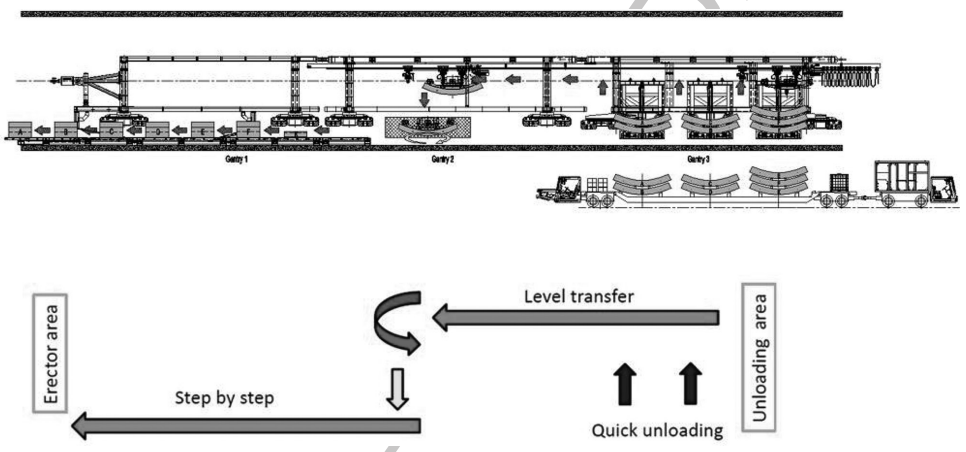

Figure 2.45 The segments delivery systems: 1 Erector, 2 Gantry Crane, 3 Quick-unloading system.



Figure 2.46 Photograph of the segment feeder.

Taylor & Francis – Distribution

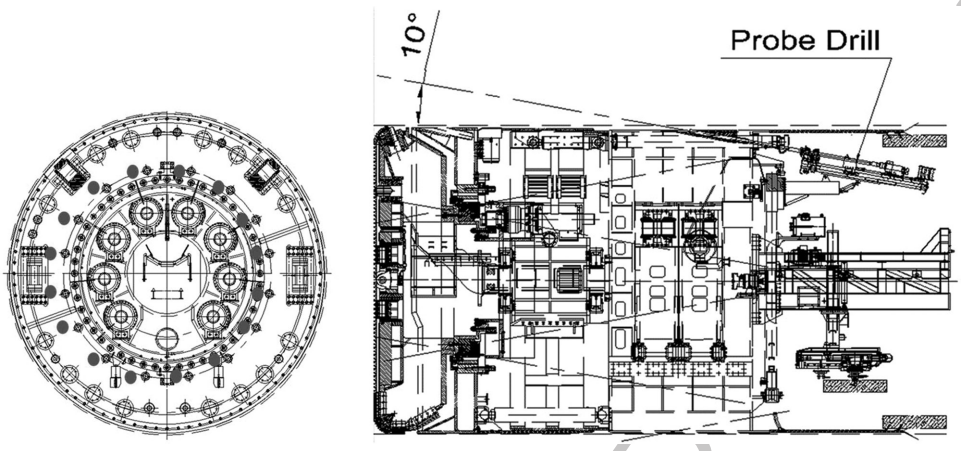

Figure 2.47 Example of the drilling facilities through the shield and the cutterhead (in red are marked the holes for probing/coring through the cutterhead).

AU: This is a single-colored book. Color has been mentioned in the Figure 2.47. Please rephrase the sentence with respect to b/w accordingly.

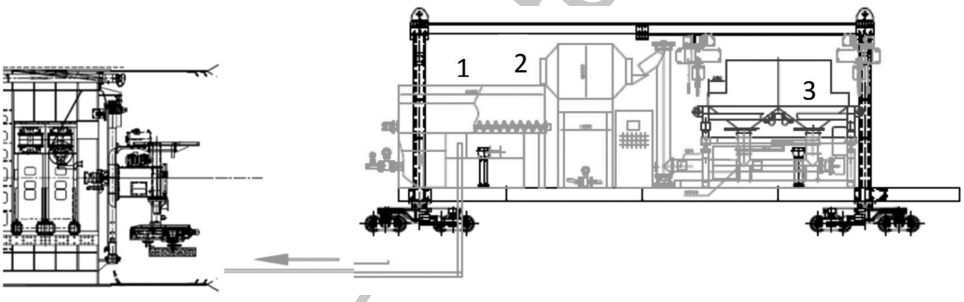

Figure 2.48 Example of the mortar pumping system: 1 Agitator, 2 Mixer, 3 Mortar tank.

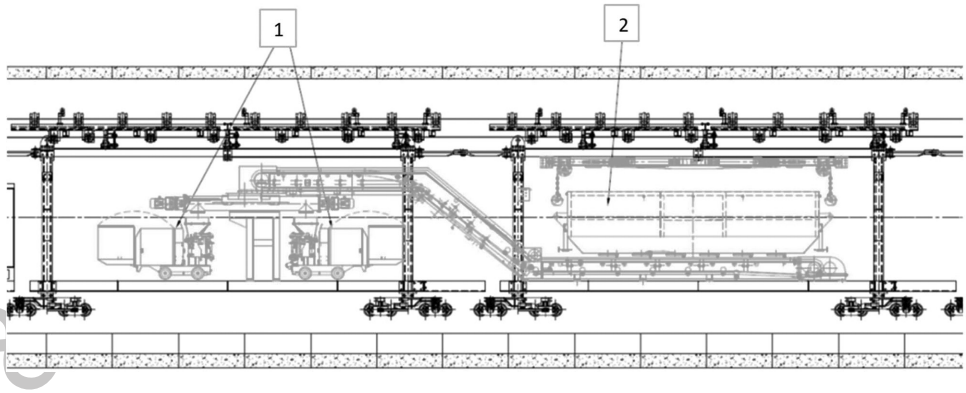

Figure 2.49 Example the pea gravel system: 1 pea gravel pumps, 2 pea gravel tank.

Taylor & Francis - for review only

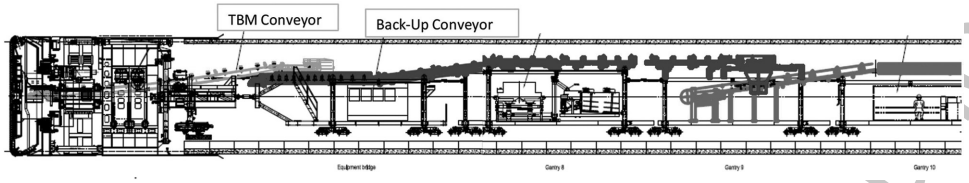

Figure 2.50 Example of the mucking-out conveyors.

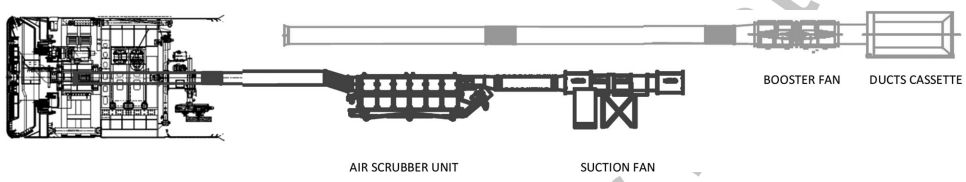

Figure 2.51 Example of the ventilation system - air pushing scheme.

2.5.1.4 Drilling process

The TBMs are performing the excavation by the disk cutting tools, mounted on the cutterhead, as a result of the simultaneous thrust and rotation action of the cutterhead itself.

The machine thrust and guiding forces are transferred on the cutterhead by means of a series of double-acting hydraulic cylinders, which vary in number and position in accordance with the type of machine and the nominal excavation diameter.

Different theories have been developed to discuss the mechanism by which the disk cutting tools perform their excavation action, clarifying which are the relevant geometric and physical greatness in the phenomenon of formation of rock fragments, and they can be founded in Roxborough and Phillips (1975) and Sanio (1985).

2.5.1.4.1 THRUST APPLIED TO THE TUNNEL FACE THROUGH THE CUTTERHEAD

If we ideally divide the cutterhead into four sectors, in each of which the hydraulic thrust cylinders exert their action, the total thrust that is acting on the cutterhead, ignoring all the friction forces that are developed during the excavation and the advancement of the machine, the thrust applied to the cutterhead can be expressed by the sum of the action of each cylinder.

To determine the net thrust acting on the disc cutting tools, it is necessary to consider both, the effect of a possible counter pressure acting in the thrust cylinders, usually present in those acting on the upper quadrant of the cutterhead and on those acting on one of the two lateral quadrants, and the effect of the friction that develops between the rock material and the moving part of the machine. To take into account the effect of friction it is necessary to consider both, that caused by the own weight

T&F Proofs – Not for distribution

of the machine, corresponding to the weight of that part of the TBM that is moving during excavation, and that caused by the radial forces applied by any stabilizer device. The effect of the sliding-type friction, on the advancement of the machine can be expressed as:

$$\left[n'' \times \left(S_v + S_h\right) + P_p\right] \times \rho \tag{2.6}$$

where n" is the number of stabilizers, S_v and S_h respectively the horizontal and vertical component of the reaction to the force applied by the stabilizers, P_p the weight of that part of the machine that advances during excavation and ρ is the sliding friction coefficient.

With reference to the components of the reaction to the force applied by the stabilizers, indicating with α the angle of inclination of the axis of the stabilizers, with respect to the horizontal plane, with p^* the pressure acting on them and with d" the diameter of the stabilizer cylinders, it is possible to obtain the total net thrust that is expressed as:

$$S_n = \left[\pi \frac{d^2}{4} \times \sum_{i=1}^{n} p_i - P \times n' \times \pi \frac{\left(d^2 - d'^2\right)}{4}\right] - \left[n'' \times \left(S_v + S_h\right) + P_p\right] \times \rho \tag{2.7}$$

By dividing the total net thrust, acting on the cutterhead, by the number of disk cutters installed on the cutterhead itself, the value of the average net force per cutting tool is obtained.

2.5.1.4.2 ANALYSIS OF THE FORCES INVOLVED IN THE BORING MECHANISM

When the average net force applied on each cutter, also called penetration force F_T, has such an intensity as to induce a compressive stress in the rock material greater than its mechanical strength, the disc cutters penetrate for a certain depth p in the tunnel face.

As shown in Figure 2.52, this force F_T is associated with the force applied in the shear direction, therefore normal to the penetration force, called rolling force F_R and the lateral thrust force F_S.

On the basis of simple geometric considerations, the expressions of the three forces involved in the excavation mechanism by means of disc cutting tools can be written as follows:

$$F_T = 2 \times F \times \sin\frac{\beta}{2} \tag{2.8}$$

$$F_S = F \times \cos\frac{\beta}{2} \tag{2.9}$$

$$F_R = F_T \times tg\ \psi \tag{2.10}$$

According to the theory developed by Roxborough and Phillips (1975), the resistance to penetration is directly proportional to the uniaxial compressive strength of the rock

T&F Proofs – Not for Distribution

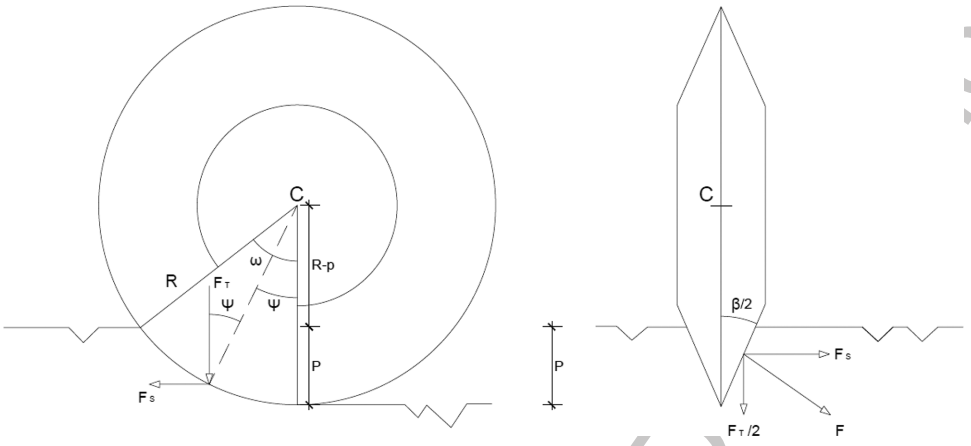

Figure 2.52 The forces involved in the excavation mechanism by means of disc cutter.

material, therefore the penetration p, to which corresponds a contact pressure between the disk cutter and the rock, is equal to the uniaxial compressive strength of the rock itself.

On the basis of this hypothesis, it is possible to determine the existing relationships between the forces involved in the excavation mechanism and the physical and geometric greatness that govern the interaction phenomenon between the cutting discs and the rock material.

With reference to Figure 2.53 and indicating with A, the area of the contact surface between the cutting disc and the rock surface is explained as:

$$A = A_1 \times \frac{1}{\sin\frac{\beta}{2}} \tag{2.11}$$

$$A_1 = 2 \times A_2 \times tg\frac{\beta}{2} \tag{2.12}$$

$$A_2 = S_{\mathrm{CAB}'} - S_{\mathrm{CAB}} = \frac{R^2}{2} \times \varpi - \left(\frac{1}{2} R\sin\varpi \times R\cos\varpi\right) \tag{2.13}$$

With simple steps, it is possible to obtain the contact area as:

$$A = \frac{D^2}{4} \times \left(\varpi - \frac{\sin 2\varpi}{2}\right) \times \frac{1}{\cos\frac{\beta}{2}} \tag{2.14}$$

Known the contact area A and accepting the Roxborough and Phillips (1975) hypothesis about the direct proportionality between the depth of penetration p and the uniaxial compressive strength of the rock material, it is possible to obtain:

$$F = \sigma_f \times A = \sigma_f \times \frac{D^2}{4} \times \left(\varpi - \frac{\sin 2\varpi}{2}\right) \times \frac{1}{\cos\frac{\beta}{2}} \tag{2.15}$$

T&F Proofs – Not for D...on

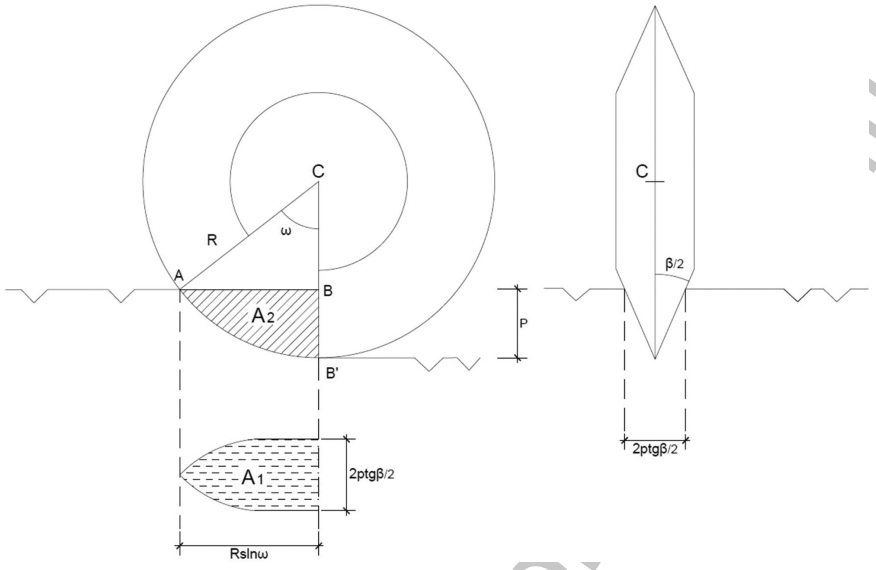

Figure 2.53 Geometric relationships in the rock-cutter interaction phenomenon.

Considering the friction effect, that develops on the contact surface rock-cutter during the boring process, through its coefficient $f = tg\ \varphi$ (Figure 2.54) we obtain:

$$F_T = 2 \times F \times \sin\left(\frac{\beta}{2} + \varphi\right) = \sigma_f \times \frac{D^2}{4} \times \left(\varpi - \frac{\sin 2\varpi}{2}\right) \times \frac{\sin\left(\frac{\beta}{2} + \varphi\right)}{\cos\frac{\beta}{2}} \tag{2.16}$$

By developing the sine of the angle $(\beta/2 + \varphi)$ and considering that the typical values of the rock-cutter friction angle are of the order of $1\text{–}2 \times 10^{-1}$ sexagesimal degrees, it is possible to set $\cos \varphi = 1$ from which:

$$F_T = \sigma_f \times \frac{D^2}{4} \times \left(\varpi - \frac{\sin 2\varpi}{2}\right) \times \left(tg\frac{\beta}{2} + tg\varphi\right) \tag{2.17}$$

Since, as can be seen from Figure 2.52, $R \cos \omega = R - p$, it is possible to obtain:

$$\begin{aligned} F_T &= f\left(\sigma_f, D, p, \frac{\beta}{2}, \varphi\right) \\ &= \sigma_f \times \frac{D^2}{4} \times \left[ar\cos\frac{D-2p}{D} - \frac{1}{2} \times \sin 2\left(ar\cos\frac{D-2p}{D}\right)\right] \times \left(tg\frac{\beta}{2} + tg\varphi\right) \end{aligned} \tag{2.18}$$

Once the penetration force is known, the rolling force F_R and the lateral thrust F_S are easily obtained; looking at Figure 2.54, we can write:

$$F_R = F_T \times tg(\psi + \varphi) \tag{2.19}$$

T&F Proofs – Not for Distribution

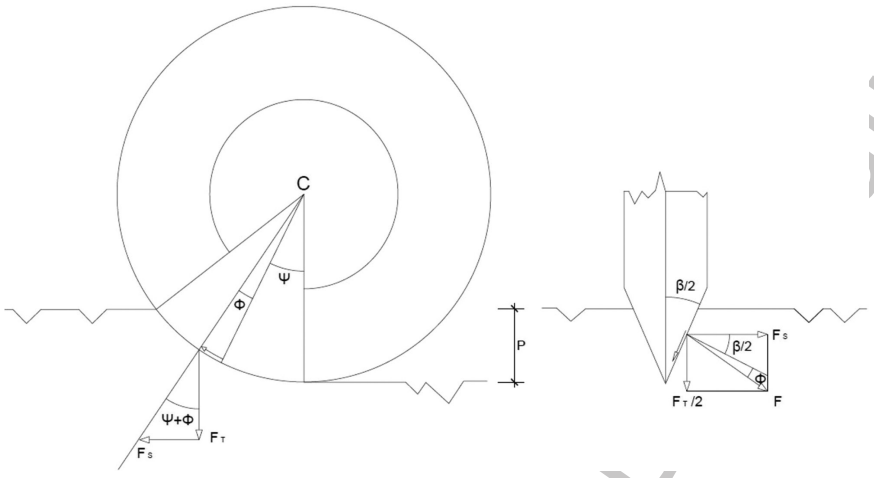

Figure 2.54 Effect of friction between the cutting edge and the rock.

Developing the term $tg(\psi+\varphi)$ and considering that $tg\psi = \sqrt{\frac{p}{D-p}}$:

$$F_R = \sigma_f \times \frac{D^2}{4} \times \left(\varpi - \frac{\sin 2\omega}{2}\right) \times \left(tg\frac{\beta}{2} + tg\varphi\right) \times \frac{\sqrt{\frac{p}{D-p}} + tg\varphi}{1 - \sqrt{\frac{p}{D-p}} \times tg\varphi} \tag{2.20}$$

$$F_S = \frac{F_T}{2} \times \frac{1}{tg\left(\frac{\beta}{2} + \varphi\right)} \tag{2.21}$$

2.5.1.4.3 CONSIDERATIONS ON THE FORCES INVOLVED IN THE BORING MECHANISM

From the equations of the penetration, rolling and lateral thrust forces, it can be seen that these greatness are a function of the uniaxial compressive strength of the rock material, the diameter of the disc cutters, the depth of penetration, the dihedral angle of the edge of the cutter (the tip of the cutter) and, if the rock-cutter friction coefficient is significant, they are also influenced by the friction that develops when the cutting tool comes into contact with the rock.

$$F_{T,R,S} = f\left(\sigma_f, D, p, \frac{\beta}{2}, \varphi\right) \tag{2.22}$$

It is interesting to observe that, with the same penetration, the F_T increases more than linearly with the cutter diameter and this explains why in the past disk cutters with a maximum diameter of 393.7 mm (15.5 in) were used while today, thanks to the greater strength and reliability of the bearings of the cutters assembly and the possibility of

T&F Proofs – Not for Distribution

thrusting on the cutterhead significantly higher than in the past, it is possible to use disk cutters with a diameter up to 482.6 mm (19 in) which allow to obtain high performance in terms of penetration even in the case of rocks with very high strength up to 200 MPa.

Looking at the equation of the rolling force, it is also interesting to note that F_R increases as penetration and thrust force F_T increase but is independent from the rolling speed of the cutter while is rolling on the surface of the tunnel face.

During the last decades, several research studies have been performed to find the trends of the penetration and rolling forces, as a function of the cutters diameter, the penetration and the dihedral angle of the disk cutters, as well as those of the excavation specific energy, expressed in terms of the work produced by the cutter per unit volume of rock material excavated, and of the yield, defined as the volume of excavated rock per unit of length travelled by the disc cutter during excavation. These research studies have clearly shown the following trends:

- as the diameter of the cutters increases, the F_T force necessary to maintain constant penetration increases, as it is logical to expect, while the excavation specific energy S_E and the rolling force F_R remain practically constant.
- as penetration increases, penetration and rolling forces F_T and F_R increase, as well as yield, while the specific energy decreases significantly. The decrease of S_E as the penetration depth increases, can be explained by considering that the effect on the excavated material volume prevails over the increase in F_T.
- as the disk edge angle increases, both the penetration force and the specific energy increase significantly, while the rolling force increases slightly and the yield remains constant.

2.5.1.4.4 ROCK CHIPS FORMATION MECHANISM

From the early 1970s to nowadays, various theories have been developed on the rock chipping mechanism by means of disk cutters which, on the basis of different hypotheses, have enabled the comprehension of the phenomenon in question.

It is also true that, despite all the studies conducted on the subject, a model capable of fully and comprehensively explaining all the phenomena observed in the excavation by means of disc cutting tools, has not yet been developed.

Consequently, the scientific debate on the way of formation of the fractures responsible for the formation of rock fragments is still alive; the presence of a system of fractures with radial development around the cutters justifies the hypothesis that the rock chipping occurs by traction, while from the observation of the rock fragments there are evident surfaces of breakage due to shear.

The complexity of the topic suggests to analyse the phenomenon of the formation of rock chips, initially considering the interaction between the single cutter and the rock, and then considering the effect on the breaking mechanism of the presence of several adjacent cutters.

2.5.1.4.5 THEORY OF RADIAL FRACTURING IN ACCORDANCE WITH THE PRESSURE BULB

The model developed by the CSM model that, based on the theoretical considerations set out below, was able to make reliable predictions on the TBM performance and to

T&F Proofs – Not for Distribution

design cutterheads and disc cutters capable of obtaining the best benefits in terms of performance.

One of the hypotheses underlying this model called "pressure bulb model", confirmed by the experimental observations made in recent years by numerous researchers, is related to the formation of an intensely fractured area around the cutting tool, generated as a result of its penetration into the rock material. The experimental observation has also highlighted that in proximity of the tip of the disc cutter, due to the very high compressive stresses induced by the force applied by the cutters themselves, the rock material is crushed and reduced to a very fine powder.

In this regard, following numerous inspections of the excavation face, carried out during the period of time daily dedicated to the maintenance of the cutterhead. The following remarks can be highlighted:

- when the excavation is performed through rock formations with high mechanical strength, the grooves left by the cutting tools on the excavation face are evident and partially filled with very fine material compacted within the grooves themselves; this material is scarcely present in formations consisting of low resistance rock materials;
- the lower presence of very fine material inside of the grooves in case of rocks with low strength could be explained by considering that the energy required by the cutters to penetrate the rock material is much lower than that required to penetrate in the case of high-strength materials, then the rock breaks, as the cutting tool penetrates, even before being reduced to a very fine dust;
- the tunnel face surface between two consecutive grooves appears clean and with a profile practically flat; moreover, in the case of rocks with evident fragile behaviour, such as some types of volcanic rocks in the territory of Hong Kong, this surface appears to protrude from the face and the rock chips appear with a conchoidal shape indicating a clear breaking behaviour by traction.

Coming back to the theoretical considerations underlying the model in question, it is interesting to observe that the exact configuration of the zone intensively fractured is not known but it is assumed, for simplicity, of circular shape and is also assumed that its extension depends on the mechanical characteristics of the rock and from the cutter geometric characteristics and in particular from its width at the tip.

The size reduction of this area, auspicial for reasons such as the reduction of dust generated during excavation, the increase of the boring efficiency and the reduction of specific excavation energy, consequent to the increase in the average size of the rock chips, is obtainable by means of disc cutters and cutterheads designed considering the interaction phenomenon according to this theoretical model. This area is characterised by the action of high shear stresses under high compressive stresses and constitutes the means through which the stresses induced by the cutters are transferred to the surrounding rock; for this reason, it is also called pressure bulb area (Figure 2.55).

With regard to the distribution of pressure within the intensely fractured area, since this is neither known nor, due to the complexity of the phenomenon, determinable, it is assumed, for simplicity of calculation, of the hydrostatic type.

The stresses induced by the pressure bulb are the cause of the formation and propagation of radial fractures which are the dominant discontinuity surfaces around the

T&F Proofs – Not for Distribution

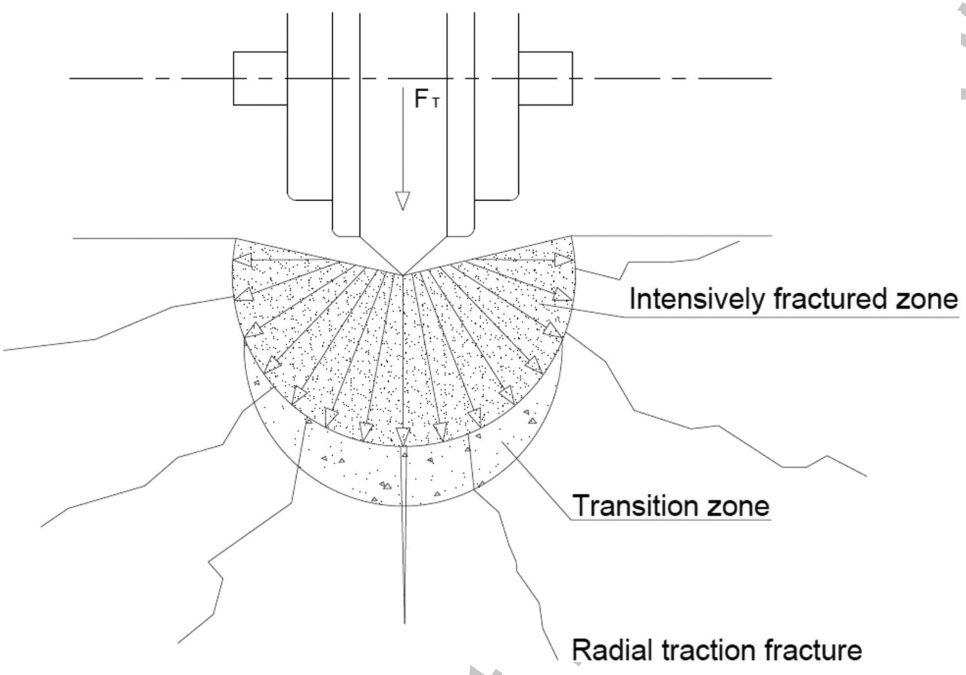

Figure 2.55 Pressure bulb zone based on the model. (Modified from Ozdemir et al.)

intensely fractured area. The pressure bulb model assumes as a fundamental hypothesis that the development and propagation of fractures is caused by tensile stresses and that such fractures are the main way of formation of rock fragments. It is worth noting that the tensile fractures, induced around the intensely fractured area, are oriented in directions where the shear stresses are also high and therefore, a model that predicts the formation of rock fragments as a result of a failure mode in traction and shear, it would be closer to reality. The determination of the penetration and rolling forces F_T and F_R and the lateral thrust F_S would require the integration on the volume of the elementary forces generated by the pressure applied by the cutter on the rock. The hypothesis that the distribution of this pressure is, around the tip of the cutter, of hydrostatic type, allows to neglect the lateral thrust forces, since in such conditions, the forces acting on the opposite faces of the cutter tend to cancel out. Neglecting F_S, the forces F_T and F_R can be determined by integration, on the line of contact between the cutter and the rock, of the elementary forces acting along this contact. For this purpose, it is assumed that there is a pressure distribution, within the rock-cutter interaction zone, along the contact between the disc cutter and the rock as shown in the following Figure 2.56.

The interaction zone can be identified by means of the angle ω of the figure, linked to the radius R of the disc cutting tool and the depth of penetration p, from the relation:

$$\omega = ar\cos\frac{R-p}{R} \tag{2.23}$$

T&F Proofs – Not

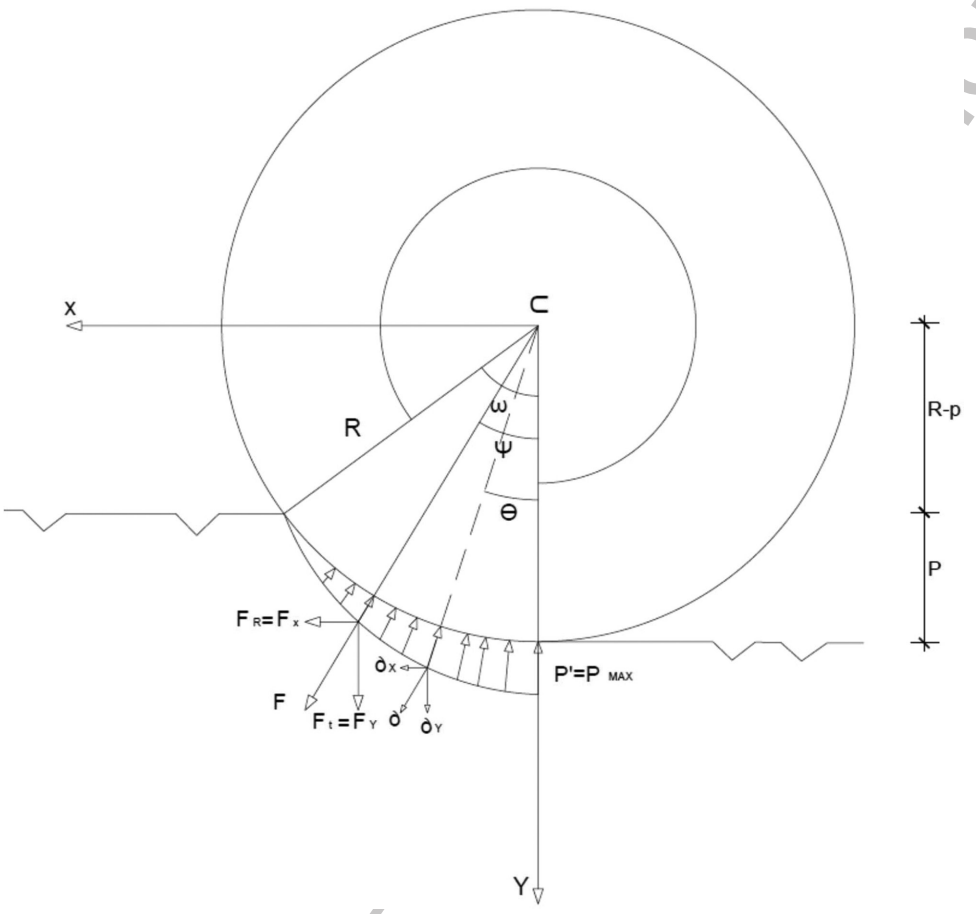

Figure 2.56 Linear distribution of the pressure on the rock-cutter contact. (Modified from Ozdemir et al.)

The intensity of the pressure P is, at each point, a function of the angle ϑ and of the pressure at the base of the cutter P'.

$$P = f\left(\vartheta; P'\right) \tag{2.24}$$

2.5.1.4.6 INFLUENCE OF THE ROCK MECHANICAL ANISOTROPY IN THE CHIPPING MECHANISM

In the theories presented so far, it has always been assumed that both the rock material and the rock mass have a mechanical behaviour of a homogeneous and isotropic type. Considering the effect on the forces involved of the mechanical anisotropy of the rock (schistosity) and/or of the rock mass (stratifications) would entail, from the

T&F Proofs

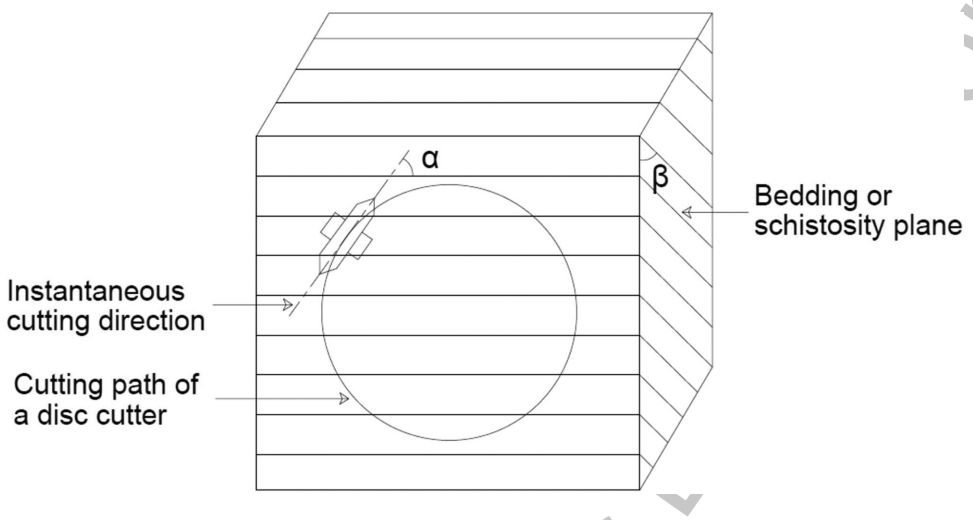

Figure 2.57 Geometry of the problem in anisotropic conditions (Sanio, 1985).

analytic point of view, considerable complications, to overcome which, one can proceed using an empirical approach, therefore based on laboratory experiences. Sanio (1985) developed a theory to model tensile fracturing with isolated cutter. The intensity factor k of the critical pressure has been introduced and through this the shear constant S_k, which, depending on the mechanical strength of the rock material and on the fracturing degree of the rock mass. Considering α' as the angle between the instantaneous rolling direction of the cutter and the trace on the excavation face of the discontinuities and with β' the angle between the face and the discontinuity planes (Figure 2.57), the effect of mechanical anisotropy on the penetration and rolling forces can be determined by experimentally found the correlation between the shear constant S_k and these angles.

Laboratory tests were carried out on rock materials with different lithology and different degree of anisotropy of the mechanical characteristics, according to all the possible combinations of the angles α' and β', varying the same for intervals of 30°, keeping the depth of penetration constant and equal to 2 mm of the indenter.

Using the notation shown in Figure 2.58, the tests have shown that the ratio $\frac{F\beta',\alpha'}{F\beta'}$ is not affected by the α' angle value and that the influence of this angle on the penetration force is negligible when $\beta' = 0$ and also in the real case where, as the disk cutters roll on the excavation face, the angle α' varies continuously between 0° and 90°.

Regarding the angle β', which in the real case of TBM excavation represents the inclination of the discontinuities with respect to the tunnel face, the laboratory testing has instead highlighted a strong correlation between this angle and the penetration force. The trend of the ratio $\frac{F\beta'}{F0}$ as the angle β' can be described, with sufficient accuracy, by the following equation:

$$\frac{F\beta'}{F0} \cong \cos^2 \beta' + \frac{F90}{F0} \times \sin^2 \beta' \tag{2.25}$$

T&F Proofs – Not for Distribution

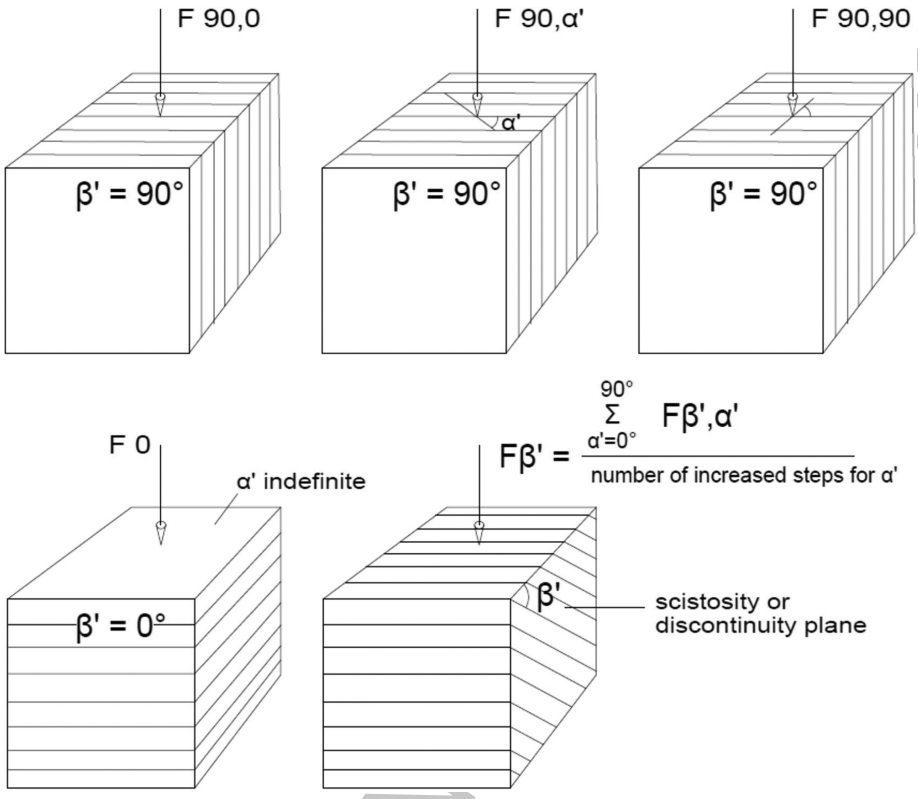

Figure 2.58 Scheme of the tests performed and the used notation (Sanio, 1985).

The reason of this trend can be explained by considering that when the discontinuities are oriented parallel to the direction of application of the load, i.e. when $\beta' = 90°$, the tensile fractures, that are generated at the border of the intensely fractured zone, tend to propagate with direction parallel to the direction of the discontinuities and therefore to concentrate in the area below the tip of the cutter. When, on the other hand, the discontinuities are orthogonal to the direction of application of the load, i.e. when $\beta' = 0°$, the fractures propagating mainly with a direction parallel to the discontinuity planes, they tend to affect an area of rock volumetrically lower than in the previous case with consequent reduction of the ratio $\frac{F\beta'}{F0}$.

Recalling the expression of the penetration force found according to the theory of Sanio (1985), the shear constant can be written in the form:

$$S_k = \frac{F_T}{tg\frac{\beta}{2} \times \sqrt{2R \times s \times p}} \tag{2.26}$$

It should be noted that as a consequence of the rolling motion of the cutting tools on the excavation face and the resulting the formation of the rock chips, the pressure

T&F Proofs – Not for Distribution

induced within the intensely fractured area undergoes cyclical variations in intensity and therefore the average values penetration and rolling forces could be consequently considered. By considering the average values for the two extreme cases in which either $\beta' = 90°$ and/or $\beta' = 0°$ we obtain:

$$\frac{S_k \beta' = 90°}{S_k \beta' = 0°} = \frac{\overline{F_T \beta' = 90°}}{\overline{F_T \beta' = 0°}} \tag{2.27}$$

This relationship indicates that the effect of anisotropy for the average penetration force is independent from the depth of penetration, from the spacing between the disc cutting tools and from their geometric characteristics.

2.5.1.4.7 INTERACTION BETWEEN ADJACENT DISC CUTTING TOOLS

Several of the models of rock chip formation mechanism contains the distance between the disks. It is therefore obvious that this distance should be optimised.

It has been clearly highlighted that the radial fractures propagation phenomenon, responsible for the formation of rock chips, is governed by the intensity of the pressure existing in the crushed zone, which depends on the extent of the penetration force. In accordance with the principles of fracture mechanics in fragile bodies, fractures always propagate in the direction that provides the lowest specific surface energy and, as a consequence of this, the rock fragments can be generated by fractures oriented at any angle. This explains the reason why during the inspections of the tunnel face localised over-excavations are sometimes observed or, following the spoil shape and size analysis, rock fragments with a wedge-shaped section, with triangular section and dimensionally smaller than the vast majority of the others are often observed. Moreover, when radial fractures develop towards the surface of the excavation face, fragments of limited dimensions are formed close to the tunnel face which cause, as a consequence of their detachment, a reduction in pressure in the crushed zone which prevents the development of lateral fractures, leaving the material between the tracks of two adjacent cutting tools practically intact. This process can continue as long as the passages of the adjacent disc cutting tools can give rise to the development of fractures, that interacting with each other, produce rock chips of optimal size. On the other hand, when the intensity of the stress in the areas of intense fracturing is excessively high, the fractures penetrate deeply into the mass generating, as a consequence of the interaction between adjacent tools, an undesired over-excavations. The interaction between the fractures generated by adjacent cutting tools clearly produces an efficient rock abatement mechanism, which in order to develop, requires an adequate relationship between the spacing and the depth of penetration of the cutting edges. The laboratory tests developed by various researchers have shown that:

- given Sc the minimum distance at which two cutting tools can interact, called critical spacing, the formation of the rock fragments occurs by interaction between the radial fractures if the spacing of the tools themselves results $S \leq Sc$. When $S > Sc$ rock fragments are generated considerably larger than those produced by isolated cutting edges;

T&F Proofs – Not for Distribution

- as the spacing decreases from the critical value *Sc*, the excavation efficiency in terms of rock material bored, per unit of travelled cutters length, and per unit of boring specific energy, increases until reaching a maximum corresponding to the optimal spacing (S_{OPT}); any variation in the spacing value from the optimal one leads to a reduction in excavation efficiency;
- the critical and optimal spacing values depend on the type of disc cutting tool used, in particular on its diameter and the opening angle of the tip, as well as on the mechanical characteristics of the rock material and the depth of penetration;
- as the depth of penetration p varies, the values of the critical and optimal spacing vary but the ratio remains constant; this ratio therefore depends exclusively on the type of rock and on the value of the opening angle of the tip of the cutter edge.

Therefore, correct design of the cutterhead must be conducted by seeking that distribution of the disc cutting tools that optimises the relationship between the spacing itself and the depth of penetration. If this ratio is less than the optimum, then the cutterhead operates in optimal working conditions even when the cutting tools are partially worn (Figure 2.59).

In real applications, since the spacing value is fixed, once the cutterhead has been chosen, the radial fractures responsible for the phenomenon of the formation of rock fragments (chipping mechanism) are developed due to cumulative increases in the penetration depth and due to consecutive passages of the cutters during the rotation of the cutterhead. It may happen that, as a consequence of the inevitable consumption of the cutters edge and/or of a locally insufficient thrust, in relation to the mechanical characteristics of the rock, the cutters may not penetrate in the first passage of a sufficient depth to allow that the radial fractures interact with each other enabling the formation of the rock fragment. In this case, it is necessary to wait until in the following cutters passage, the increase in the penetration depth of the cutters, allows the ratio to reach the optimal value. In the diagrams shown in Figures 2.60 and 2.61, the chipping phenomenon, simulated in the laboratory, keeping the penetration increase constant, or maintaining the force of penetration constant, as the number of passages of the cutting tool varies, is presented.

By indicating Q_R as the volume of excavated material as a consequence of the interaction between cutters in adjacent positions and Q_U as the volume of excavated material with the value of the spacing greater than the critical one, or when the cutters do not interact with each other, the cutters spacing influence on boreability can be appreciated through the analysis of the variation of the ratio Q_R/Q_U as the ratio *s*/*p* varies, as shown in Figure 2.62.

2.5.1.4.8 EFFECT OF CUTTERS WEAR

The cutters wear is mainly caused by the abrasiveness of the rock material and by the formation of craters and fractures on the ring itself, attributable to localised impacts generated as a result of the presence of discontinuities in the rock mass. The dust to which the rock is reduced, as a consequence of the high stresses that were generated under the cutter tip, is responsible for the wear due to abrasion of the cutting edge as well as, to a lesser extent, the rock chips which, detaching from the tunnel face, get in

T&F Proofs – Not for Distribution

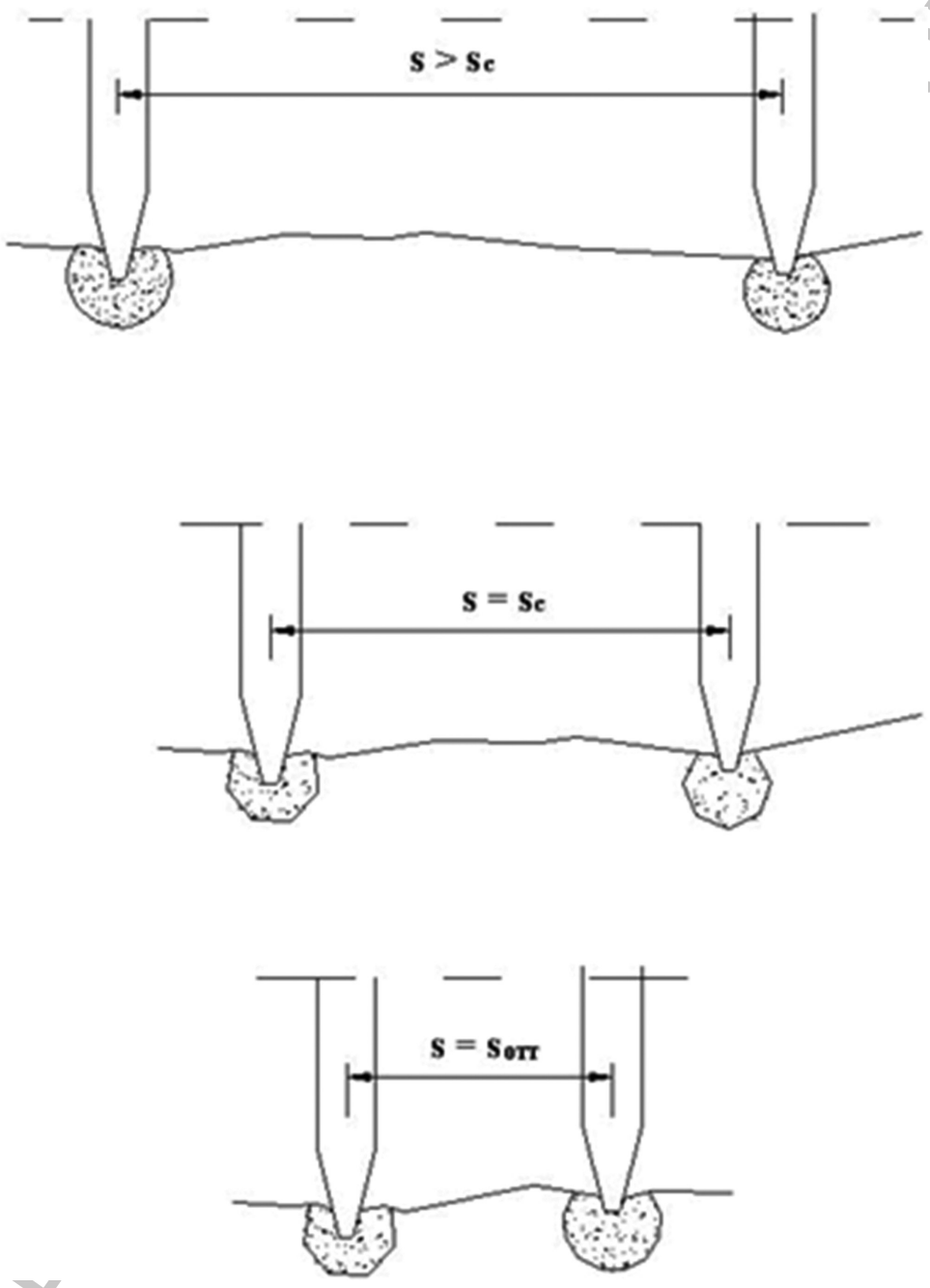

Figure 2.59 Critical and optimal cutters spacing.

T&F

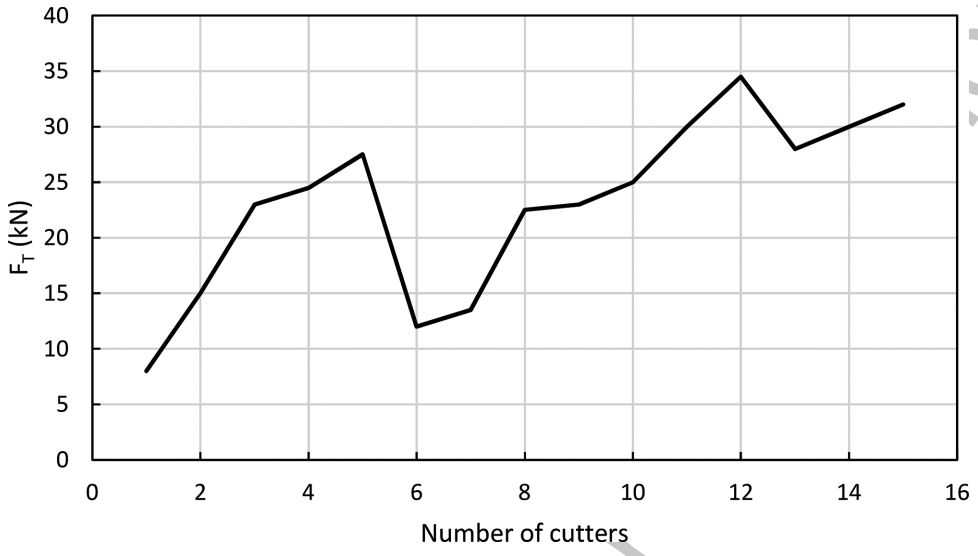

Figure 2.60 F_T as function of number of cutters passes with constant penetration.

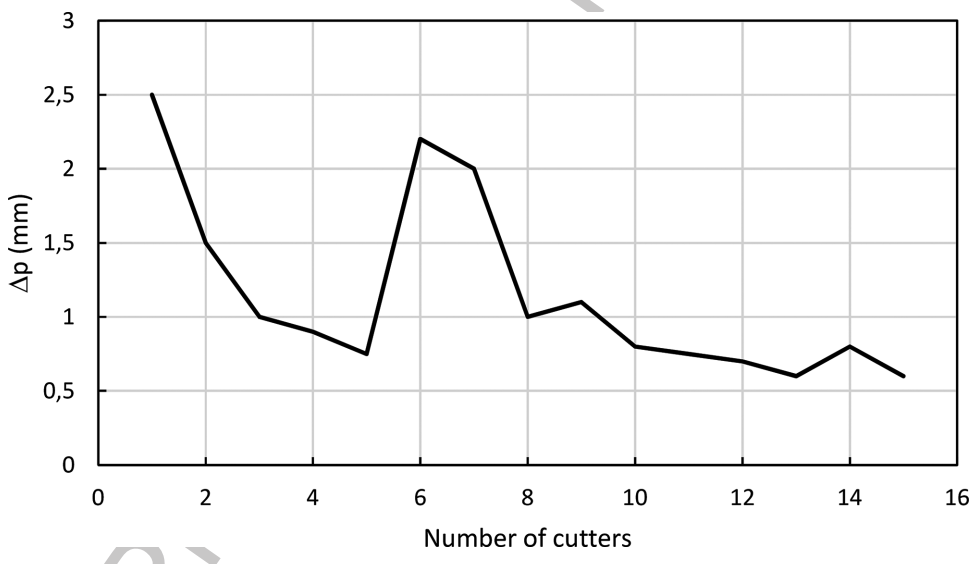

Figure 2.61 Δp as function of number of cutters passes with FT constant.

contact with the cutters as they roll on the face. The quantity of dust that is produced at each passage of the cutter in its track depends on the type of rock material and in particular on its hardness, which can be assessed by means of the small size type SJ test discerned, in Chapter 4 of Volume 1.

The speed with which a cutter wears out during excavation depends on the abrasiveness of the rock dust generated, therefore on the mineralogical nature of the rock

Taylor & Francis

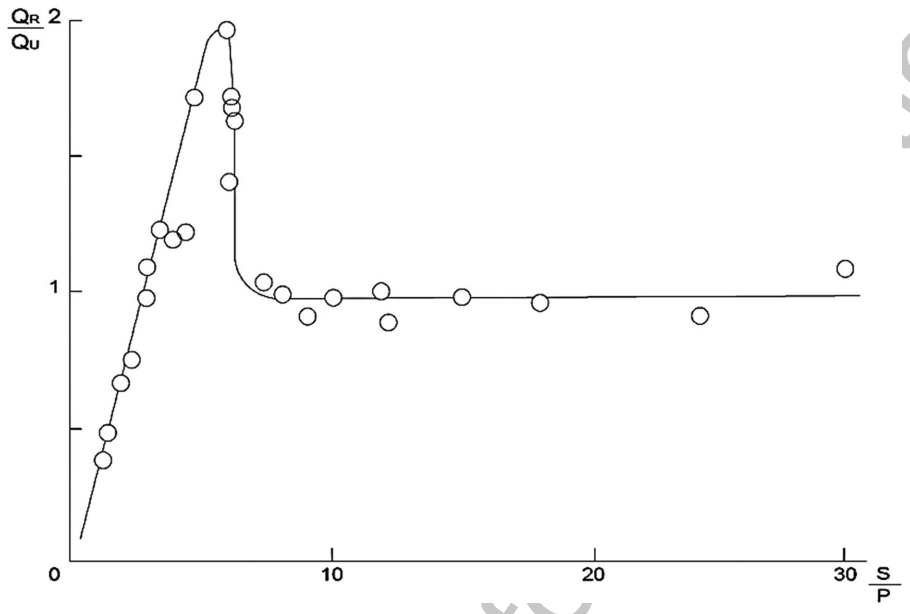

Figure 2.62 Boreability efficiency as function of s/p ratio.

material (i.e. quartz or hard minerals), on the amount of dust produced and is also influenced by contact area between the cutter edge and the tunnel face, therefore from the mechanical characteristics of the rock. The use of the water and/or polymeric foam spraying system, to reduce the dust generated during excavation, not only favours better OH&S for the workers but also has a beneficial effect on the cutters wear, cleaning the face and reducing the friction generated by the contact between the cutting tools and the rock.

Based on the observations conducted on the tools replaced for wear, it is possible to infer the characteristics of surface hardness and abrasiveness of the excavated rock material from the cutters wear profile. A wear profile with the tip of the tool flat and the sides scarcely worn, indicates that the excavated material has a high surface hardness, therefore a high presence of hard and abrasive minerals; the low depth of penetration and the low amount of dust produced during excavation tend to wear mainly the tip of the tool (Figure 2.63: profile a).

When the excavation is performed in rock materials with low surface hardness and low abrasiveness, the greater depth of penetration tends to produce high wear in the lateral sides of the cutters edge, generating a self-sharpening effect of the tip (Figure 2.63: profiles b and c).

The presence of discontinuity in the rock mass, generates shocks which, together with the severe tensile stresses to which the cutter edge is subjected during excavation, induces the formation of micro-fractures and sometimes craters on the surface of the disc cutting tool.

The laboratory experimental tests and the analysis conducted on data collected on site, allowed to confirm some of the results that emerged from various theories on the mechanism of formation of rock fragments by means of disc cutting tools.

T&F Proofs - Not for Distribution

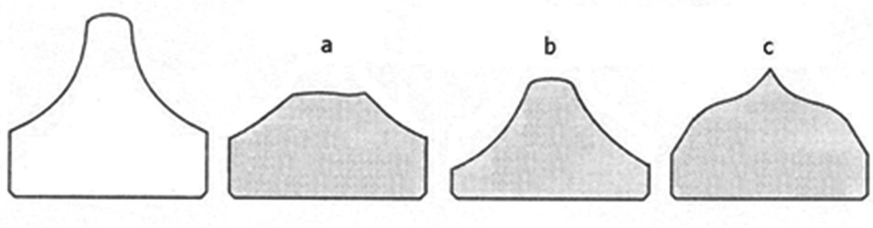

Figure 2.63 Example of the cutter worn profiles.

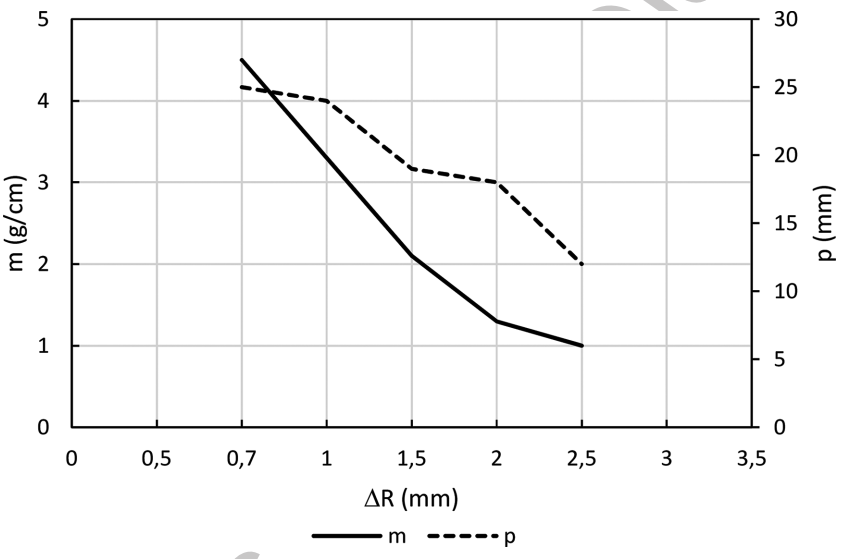

Figure 2.64 Boring efficiency trends as function of cutters wear (ΔR). Where (m) is material excavated per unit of length travelled by the cutter and (p) is the depth of penetration.

In particular, the boring efficiency, in terms of weight of material excavated per unit of length travelled by the cutter (m) or depth of penetration (p) with constant applied force on the cutter edge, decreases more than proportionally with the consumption of the cutters, expressed as a cutter ring radius variation (ΔR) (Figure 2.64).

Another important result obtained with the theory of fracturing, induced by a plastic deformation process, was also confirmed, namely the proportionality between the extension of the lateral fractures, responsible for chipping, and the cutter imprint. As shown in Figure 2.65, the rock chip width, engraved by the cutter on the tunnel face, decreases linearly as the wear of the cutting edge increases. Among the remarks that can be made about the cutters consumption, the first for obviousness and relevance, could be the cutters performance when starting the excavation of a new tunnel, when

T&F Proofs

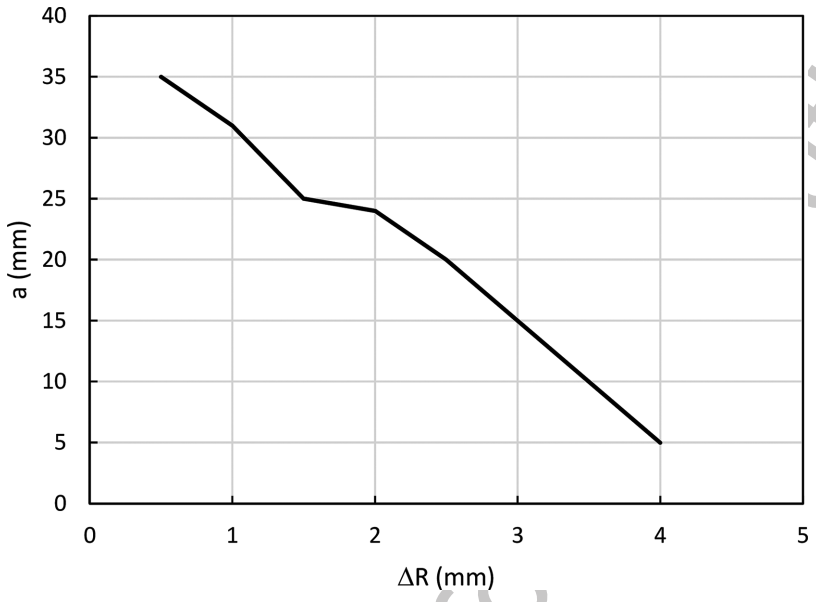

Figure 2.65 Relationship between the chip width (a) and cutters wear (ΔR).

the cutterhead is fully equipped with new disc cutters. In these conditions, as is logical to expect, there is always a better and more efficient cutters behaviour, both in terms of duration and boring capacity. The phenomenon of the development of fractures responsible for the rock chips formation occurs more frequently when the cutters are all new; the best performances obtained in this circumstance are more evident in the case of small and medium diameter machines.

As the excavation progresses, the cutters are replaced according to their wear, so that the cutterhead will result equipped with cutters in different wear conditions. Since the load on the cutters assembly bearings increases as the cutter rings wear increases, the forces applied to each cutter are different from each other; this can lead to a difference, even considerable, between the net penetration force applied on each cutter ring and the average thrust per ring, determined considering the total net thrust applied on the cutterhead. However, it must also be considered that as wear increases, as stated before, there will also be a decrease in the frequency of the formation of rock fragments, with a consequent reduction in the phenomenon of dynamic variation of the load applied to each cutter ring, therefore the threat of overloading the bearings of the cutter assembly is mitigated by the lower pulsation of the load. On the basis of what has been said so far, it appears clear that the best excavation performances will be obtained through an accurate management of the consumption of the disc cutters. This can be achieved through periodic inspections of the tunnel face and careful maintenance of the cutterhead, aimed at avoiding an abnormal excavation profile; it is preferable and strongly recommended to proceed by replacing the tools in series and avoid replacing them in isolated positions (Figure 2.66).

T&F Proofs – Not for distribution



Figure 2.66 Grooves left on the tunnel face by disc cutters.

2.5.1.4.9 EFFECT OF THE CUTTERS ROLLING SPEED

It is well known from the rock mechanics that the mechanical behaviour of rock materials is strongly influenced by load application speed: if speed of application of the load increases, both the strength and the deformation modulus of the material increase. This behaviour can be explained by considering the presence of widespread microcracks in the rock material; a high load application speed does not facilitate the propagation of micro-fractures or the formation of new fracture surfaces nor does it allow the closure of existing ones, consequently both the mechanical strength and the elastic modulus are higher than those they would measure with lower load application rates. In the process of breaking down the rock by means of cutter discs, the load application speed is directly proportional to the rolling speed on the tunnel face of the cutters themselves, which is limited, as already mentioned in a previous paragraph, only by maximum speed of rotation on its own axis of those in peripheral positions. Table 2.6 provides an indication of the rotation speed on its axis for the cutters in the most peripheral position on the cutterhead as the diameter of the disc cutters varies.

T&F Proofs – Not for distribution

Table 2.6 Values of the rotation speed of the cutting tools as a function of their diameter and the rotation speed of the cutterhead

Cutter ring diameter (mm)	356	394	432	483
Rolling speed on tunnel face (m/s)	1.7	2.0	2.3	2.6
Cutterhead rotation speed (rpm)	32/dTBM	38/dTBM	44/dTBM	50/dTBM
Cutter ring rolling speed (m/s)	91	97	102	103

Source: Bruland (1998).
Note: With a dTBM the diameter of the machine.

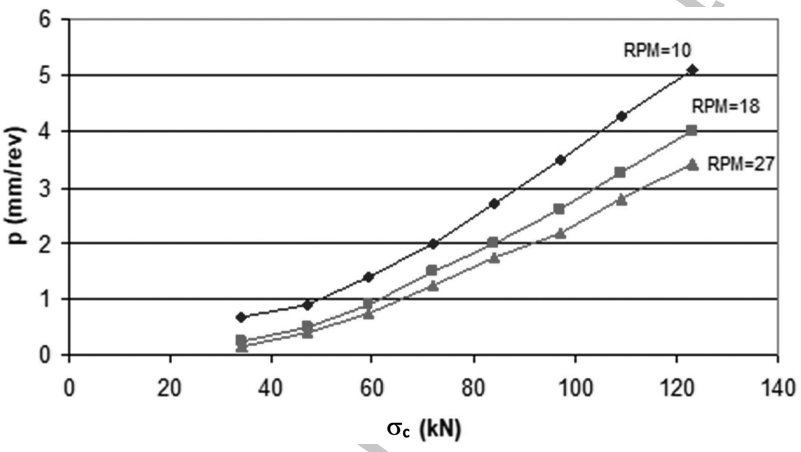

Figure 2.67 Experimental penetration curves obtained by the Colorado School of Mines with cutterhead 1.83 m diam. and 305 mm tools diam.

Assuming that the contact time between the cutter disc and the rock, in a particular point of its circular path on the tunnel face, is equally spent in the loading and unloading phases, and assuming a linear distribution of the applied load, we find that the load application velocity on each cutting ring is about 8.000–9.000 MPa/s (Bruland, 1998a,b).

If we compare these values of the load application velocity, with those recommended by the International Society for Rock Mechanics for the compression strength test of rock materials (0.5–1.0 MPa/s), we find confirmation in what has already been anticipated in previous paragraph regarding the opportunity to consider the tensile strength determined with dynamic tests as a geotechnical property, relevant for the purposes of the mechanism analysis of formation of rock fragments during mechanised excavation with Tunnel Boring Machines. At the Colorado School of Mines laboratories, a series of tests were conducted in the late 1990s using a cutterhead with a diameter of 1,830 mm, equipped with disc cutters with a diameter of 305 mm. The results obtained, for a limestone with uniaxial compressive strength equal to 120 MPa, indicate a clear dependence of the instantaneous penetration on varying the rotation speed of the cutterhead. Figure 2.67 shows that, with the same thrust per cutting tool, the penetration tends to decrease as the rotation speed increases.

T&F Proofs – Not for distribution

Other experimental studies (Rad, 1975) showed that as the rotation speed of the cutters on their axis increases, the weight of material felled per unit of length travelled decreases and the percentage ratio between the weight of finely fractured material and that of rock chips increases. These results clearly indicate that the boring efficiency decreases as the rotation speed of the cutterhead increases, but considering the advantages deriving from the greater number of passages of the cutting tools in the respective tracks per unit of time, it can be concluded that it is correct to design the cutterhead and its drive unit on the basis of the maximum permissible rotation speed.

2.5.2 TBM performance prediction models

The models can be grouped in two families; according to the hypotheses and the source of data, each model is based on:

- *Analytical models* are studies that start from theoretical assumptions, e.g. theories about force distribution;
- *Empirical models* are based on a back-analysis of a dataset collected in different projects.

Main models used in common engineering practice are hereby described. Finally, it is reported a comparative analysis in order to understand which are the parameters that are more frequently included in prediction models.

2.5.2.1 Analytical performance prediction models

Analytical performance prediction models are based on a deep study of the rock fragmentation process with mechanical tools. From the results of full-size laboratory tests, as linear cutting test, and punch penetration test, these models are based on the individuation of forces acting on the cutter, from which thrust, torque and power requirement of the TBM are defined. The main limitations of analytical models are related to the fact they combine intact rock characteristics (mainly σ_c and σ_t) with information about the cutter (e.g., cutter diameter, spacing, tip shape and cut thrust per cutter), not taking into account rock mass characteristics, as joint frequency and joint orientation, often present in empirical models. The first models proposed in literature, starting from the early 1970s, were based on laboratory tests and cutting force models, often performed on V-cutters, nowadays no more in use. Main references about first performance and cutter wear models can be found in Ramezanzadeh (2006), Ramezanzadeh et al. (2003), and Oggeri and Oreste (2012).

2.5.2.1.1 COLORADO SCHOOL OF MINES MODEL

CSM model was developed starting from the results of linear cutting test and mathematical assumption on rock fragmentation process (Rostami & Ozdemir, 1993).

T&F Proofs – Not for Distribution

The database has the following characteristics:

- tunnels in Northern America;
- $70 < \sigma_c < 200$ MPa;
- $4 < \sigma_t < 18$ MPa;
- $15 < D_{\text{disc}} < 19$ inches;
- $2.5 < p < 30$ mm.

CSM model considers the formation of a pressure bulb of crushed rock immediately under the tip, assumed to be circular; the pressure decreases on the size, while maximum stress concentration is present immediately under the cutter. The pressure distribution within the crushed zone is not known, but the authors considered it uniform to ease the formulation of the model. The length of the fractures is a function of the pressure in the crushed area, which, in turn, is a function of the normal component of the thrust F_N acting on the cutter: an optimal spacing is needed to prevent both ridge formation (due to lack of pressure and length of cracks) and over break (in case of excess of load). The pressure distribution along the cutter is present where rock and cutter interact. It is considered just in two dimensions (if the pressure distribution is constant, forces are balanced in the third dimension). Once defined total thrust per cutter, the model allows to defined force per cutter needed to obtain a certain penetration, and from this the total thrust, torque, rotational speed and power required.

A new version of the model was developed by Rostami (2008), and, more recently, it was also extended also to cutter wear prediction by Frenzel (2010). According to Frenzel (2010), the drive length that can be covered by a disc (cutter life CL) can be considered as a function of the Cerchar Abrasive Index (CAI) and disc diameter, from which net volume of rock excavated per cutter can be derived. Ramezanzadeh et al. (2003) adapted the model considering also joint spacing and angle.

In the following, the scheme proposed by Rostami and Ozdemir (1993) is discussed.

The pressure distribution along the cutter is present where rock and cutter interact. It is considered just in two dimensions (if the pressure distribution is constant, forces are balanced in the third dimension). From Figure 2.68, the angle of interaction Φ is:

$$\Phi = \cos^{-1}\left(\frac{R-p}{R}\right) \tag{2.28}$$

where R is cutter radius, in [mm] or [inches], and p is the penetration per revolution (PR), in [mm/rev] or [inches/rev].

The magnitude of pressure P, expressed in [MPa], is a function of the base pressure P', in [MPa], and the angle from the normal to the face Θ:

$$P = P'\left(1-\frac{\Theta}{\Phi}\right)^{\Psi} \tag{2.29}$$

One can use a Ψ value dependently from the shape of pressure distribution under hypothesis, ranging from 0 (uniform pressure) to 1 (linear distribution, 0 in front of the cutter and maximum under the disc tip).

T&F Proofs – Not for Distribution

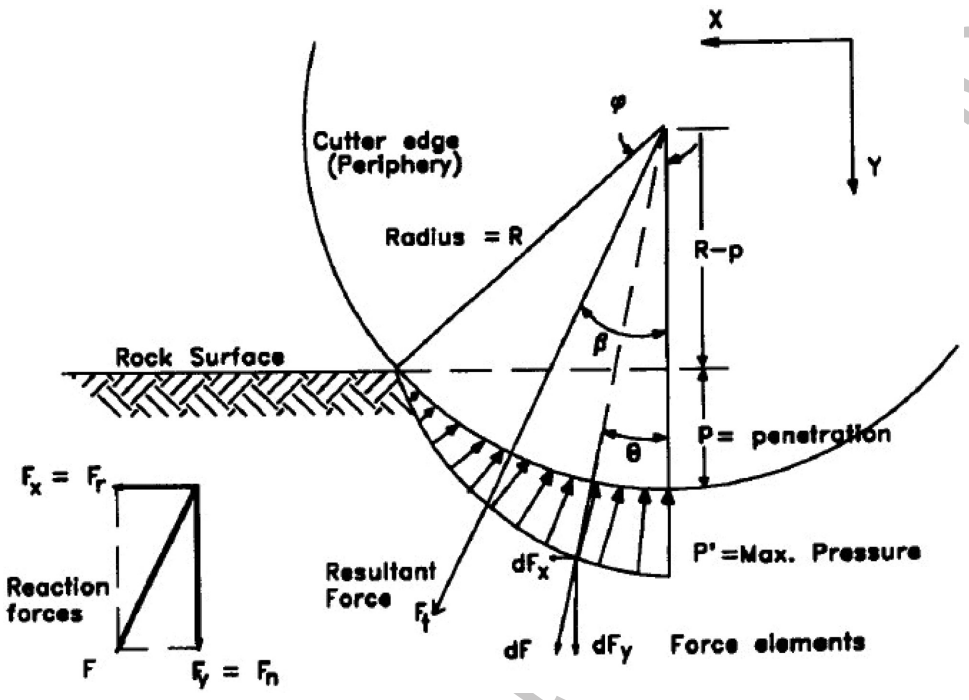

Figure 2.68 Pressure distribution at rock/tip surface and model parameters (Rostami & Ozdemir, 1993).

The base pressure *P*' is defined starting from empirical equations, in particular it can be expressed as:

$$P' = 2.12 \cdot \sqrt[3]{\frac{S \cdot \sigma_c^2 \cdot \sigma_t}{\Phi \cdot \sqrt{R \cdot T}}} \tag{2.30}$$

where S is the spacing between cutters in [mm], σ_c is the uniaxial compressive strength of the intact rock and σ_t the tensile strength of the intact rock, both expressed in [MPa]. Rock samples on which the study has been performed have σ_c values ranging from 70 to 200 MPa, while cutter diameters go from 15 to 17 inches.

The total force acting on the excavation cutters $F_{\text{tot, cutter}}$, expressed in [N] is:

$$F_{\text{tot,cutter}} = \frac{P' \cdot R \cdot T \cdot \Phi}{\Psi + 1} \tag{2.31}$$

where T is the cutter tip width in [mm].

Under the most common hypothesis applied by the authors, the pressure can be considered uniform, so the coefficient Ψ is considered equal to zero, P equal to P' and:

$$F_{\text{tot,cutter}} = 2.12 \cdot R \cdot T \cdot \Phi \cdot \sqrt[3]{\frac{S \cdot \sigma_c^2 \cdot \sigma_t}{\Phi \cdot \sqrt{R \cdot T}}} \tag{2.32}$$

T&F Proofs – Not for Distribution

$F_{\text{tot,cutter}}$ has two components, defined as the normal force F_N:

$$F_N = F_{\text{tot,cutter}} \cdot \cos\left(\frac{\Phi}{2}\right) \tag{2.33}$$

and the rolling force F_R:

$$F_R = F_{\text{tot,cutter}} \cdot \sin\left(\frac{\Phi}{2}\right) \tag{2.34}$$

The ratio between F_R and F_N is often called RC coefficient:

$$RC = \frac{F_R}{F_N} = \tan\left(\frac{\Phi}{2}\right) \tag{2.35}$$

In order to complete the performance prediction, the last step is the definition of machine parameters:

- theoretical total thrust requirement $F_{\text{tot,th}}$, expressed in [kN]:

$$F_{\text{tot,th}} = n_{\text{cutters}} \cdot F_N \tag{2.36}$$

where n_{cutters} is the total number of cutters.

- theoretical torque $M_{\text{cutterhead,th}}$, expressed in [kNm]:

$$M_{\text{cutterhead,th}} = 0.3 \cdot F_R \cdot \Phi_{\text{TBM}} \cdot n_{\text{cutters}} \tag{2.37}$$

where Φ_{TBM} is the cutterhead diameter, expressed in [m];

- rotational speed v_{rot}, expressed in [rpm]:

$$v_{\text{rot}} = \frac{v_{\text{lim,cutter}}}{\pi \cdot \Phi_{\text{TBM}}} \tag{2.38}$$

where $v_{\text{lim,cutter}}$ is the linear velocity limit of the cutters, i.e. 150 m/min for 17″ cutters.

- theoretical power requirement $P_{\text{cutter head}}$, expressed in [MN]:

$$P_{\text{cutterhead,th}} = \frac{\pi}{30} \cdot M_{\text{cutterhead,th}} \cdot v_{\text{rot}} \tag{2.39}$$

The last step is to calculate the installed thrust and power, by dividing the theoretical value with an efficiency factor η (a value proposed for TBMs currently in use is around 90%). The rate of penetration and the penetration rate can be predicted as follows:

$$\text{ROP} = PR \cdot v_{\text{rot}} \cdot \frac{60}{1{,}000} \tag{2.40}$$

T&F Proofs – Not for Distribution

A new version of the original CSM model was developed by Rostami (2008) and, more recently, it was extended to cutter wear prediction by Frenzel (2010) to who is possible the formulation the drive length a disc can cover till wear occurs, ΔL_i, is a function of CAI and disc diameter.

2.5.2.2 *Gehring model*

Gehring semi-analytical prediction model was developed in collaboration with Voest Alpine machine manufacturer (Gehring, 1995). The base function for TBM penetration prediction considers the uniaxial intact rock compressive strength. The base equation was corrected through different correction factors to consider: fracture energy, joint spacing, orientation, state of stress, ring diameter and cutter spacing. Gehring's method allows also the prediction of the disc cutter wear as a function of CAI and average penetration rate.

In the following, a short explanation of the model is presented.

The base function is:

$$p_{200} = a \cdot \sigma_c^{-b} \tag{2.41}$$

where p_{200} is the penetration per revolution, i.e. the penetration rate PR ([mm/rev]) at a thrust level of 200 kN/cutter, and a and b are two coefficients, which can be derived from Table 2.7.

The model has well-known limitations, due to the characteristic of the database. The study performed by Gehring is based on a cutter spacing $s = 80$ mm, a cutter diameter $\Phi_{disc} = 17''$, a tip width $t = 5 \div 8''$ and an average pressing force $F_N = 200$ kN/cutter. Furthermore, rocks considered have σ_c values varying from 100 to 250 MPa.

From base equation and average parameters reported in Table 2.7, Gehring deduced a more general equation:

$$p = PR = \frac{4F_N}{\sigma_c} \cdot k_1 \cdot k_2 \cdot k_3 \cdot k_4 \cdot k_5 \tag{2.42}$$

The author decided to correct the base equation through different correction factors k_i, listed below:

Table 2.7 Parameters for Gehring's equation from different sources

Source	*Coefficient a*	*Exponent b*
Farmer	29	0.98
Graham	78	0.99
Hughes	2,295	1.19
NTNU	3,350	1.29
Sanyo	46	1.00
Gehring (Average)	**799**	**0.99**

Source: Modified from Türtscher and Schneider (2012).

T&F Proofs – Not for Distribution

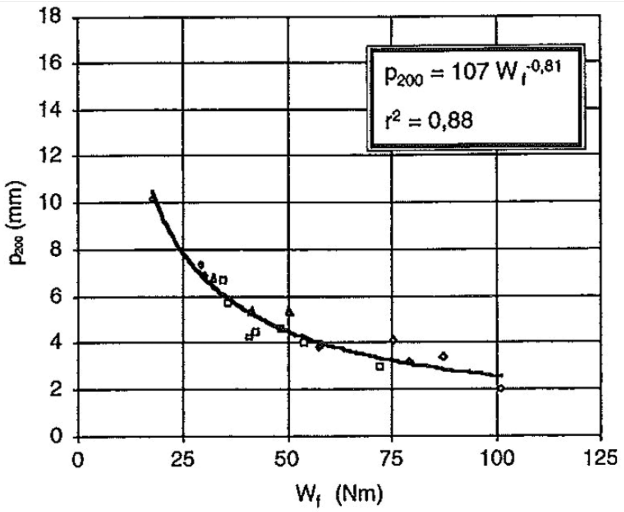

Figure 2.69 Base penetration p_{200} as a function of the fracture energy W_f (Gehring, 1995).

- *Correction factor k_1 for fracture energy:* Gehring found a relation which links the base penetration with the fracture energy needed to form the chip, as shown in Figure 2.69:

$$p_{200} = 107 \cdot W_f^{-0.81} \tag{2.43}$$

where p_{200} is penetration at a thrust level of 200 kN/cutter, expressed in [mm/rev], while W_f is the fracture energy, expressed in [Nm].

The correction factor k_1 can be calculated by passing through its correlation with the specific fracture energy w_f, expressed in [m 10^{-6}], as shown in Figure 2.70:

$$w_f = \frac{W_f}{\sigma_c} \tag{2.44}$$

from which:

$$k_1 = 0.475 \cdot w_f^{-0.56} \tag{2.45}$$

- *Correction factor k_2 for discontinuities spacing and orientation:* the author took into consideration both joints spacing (p decreases if rock is more compact, Figure 2.71) and main joints family orientation with the tunnel axis (total penetration increases if the angle goes closer to 60°, Figure 2.71). The results are summarised in Table 2.8 (Figure 2.72).
- *Correction factor k_3 for state of stress:* Gehring proposed to take into account the overburden and the state of stress on the excavation face: the author supposed an influence linked with joints opening, but he did not express an analytical equation for this factor.

T&F Proofs – Not for distribution

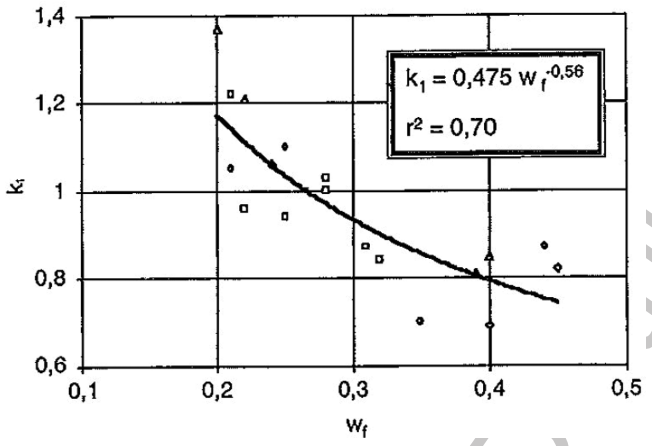

Figure 2.70 Correction factor k_1 as a function of the specific fracture energy w_f (Gehring, 1995).

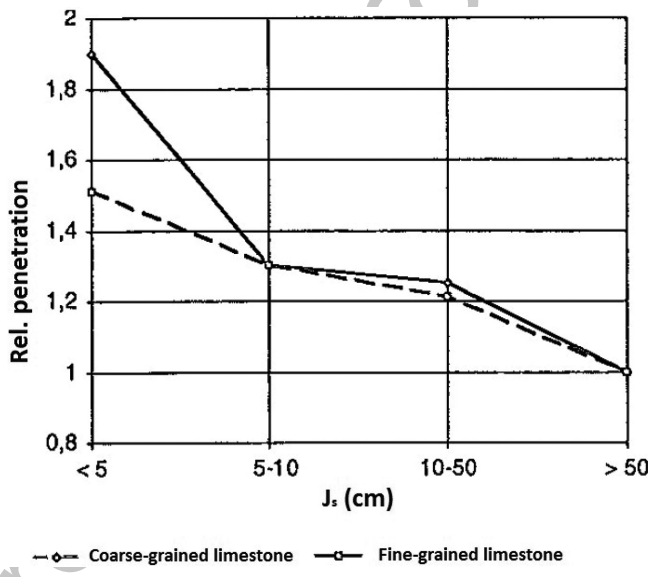

Figure 2.71 Effect of joint spacing J_s (Gehring, 1995).

- *Correction factor k_4 for cutting ring diameter:* the original correlation was found from a database of cutters with a diameter of 17″. Gehring recommended a correction factor k_4 as a function of the disc diameter (expressed in mm):

$$k_4 = \frac{432}{\Phi_{\text{disc}}} \tag{2.46}$$

T&F Proof Not for Distribution

Table 2.8 Correction factor k_2 as a function of joint angle with the tunnel axis α and joint spacing J_s, Gehring

Joint spacing	*Correction factor k_2 as a function of α*			
J_s *(cm)*	*A*			
	0 (°)	*30 (°)*	*60 (°)*	*90 (°)*
>50	1.0	1.0	1.0	1.0
10 ÷ 50	1.2	1.3	1.6	1.3
5 ÷ 10	1.4	1.8	2.3	1.6
<5	1.7	2.3	3.0	2.0

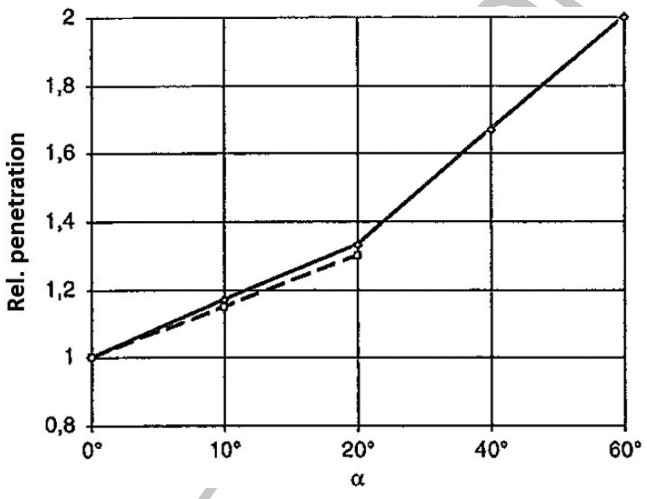

Figure 2.72 Effect of joint angle with tunnel axis α (Gehring, 1995).

- *Correction factor k_5 for cutting track spacing:* an average cutter spacing of 80 mm characterised the original Gehring model. As done for k_4, correction factor k_5 considers the deviation from the original condition of the database and it can be calculated from Figure 2.73.

The specific loss of a single cutter can be expressed by the following equation (from applied mechanics):

$$v_s = \frac{\Delta G_i \cdot \overline{p}}{L_{\text{disc}} \cdot \pi \cdot \Delta L_i} \tag{2.47}$$

so the metres covered by the i-th disc ΔL_i can be estimated as:

$$\Delta L_i = \frac{\Delta G_i \cdot \overline{p}}{L_i \cdot \pi \cdot v_s} \tag{2.48}$$

T&F Proofs - Distribution

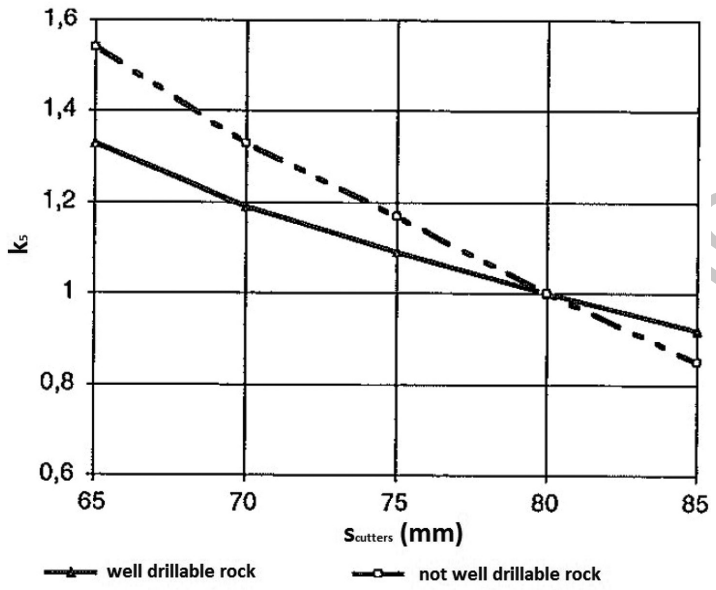

Figure 2.73 Correction factor k_5 as a function of the spacing between cutters $s_{cutters}$ (Gehring, 1995).

where:

- Δ_i are the driven metres till consumption occurs, in [m];
- Δ_i is the total weight loss of the cutter before the change, in [g] (for 17″ cutters Gehring proposed $\Delta G_i = 3{,}500$ g as a reference value);
- $\overline{p}$ is the average penetration rate, in [mm/rev];
- L_i is the track covered by the cutter, in [m];
- v_s is the specific weight loss of the cutters in advancement [mg/m].

The author proposed a correlation useful to link the specific weight loss, [mg/m], with CAI:

$$v_s = 0.74 \cdot \mathrm{CAI}^{1.93} \tag{2.49}$$

From the equations above, Gehring derives the average tunnel length a disc will be changed:

$$\Delta L_c = \frac{\Delta G_{\mathrm{disc}} \cdot \overline{p}}{L_{\mathrm{av,disc}} \cdot \pi \cdot v_s} \cdot \frac{1}{n_{\mathrm{cutters}}} \tag{2.50}$$

and the net volume of rock excavated per cutter ΔV_c [m^3/cutter]:

$$\Delta V_c = \Delta L_c \cdot \left(\frac{\pi \cdot \Phi_{\mathrm{TBM}}^2}{4} \right) \tag{2.51}$$

T&F Proofs – Not for distribution

The average path covered by a cutter can be estimated as follows:

$$L_{\text{av,disc}} = 0.6 \cdot \pi \cdot \Phi_{\text{TBM}} \tag{2.52}$$

2.5.2.3 *Empirical performance prediction models*

Several models are based on big databases of past projects, usually collected by research groups in universities and continuously updated with data from new projects. The great number of different parameters influencing TBM performance, and the high variability linked to specific on-field condition, cause the continuous development of new models. Some models are based on rock mass characteristics, while other studies propose correlations with main rock mass classifications, widespread used in rock mechanics.

2.5.2.3.1 NTNU MODEL

NTNU model is a prediction model developed in Trondheim Norwegian University of Sciences and Technology, Department of Civil and Transport Engineering. The model has been developed since 1976 and continuously updated by a series of authors. The version here reported comes from Bruland's PhD thesis (1998a).

The database is composed of more than 250 km of tunnel in Scandinavian igneous rocks, collected by the study group in last 40 years, with a range of cutterhead diameter from 2.3 to 8.5 m and σ_c ranging between 50 and 250 MPa.

The model is composed of four different parts that allow the designer to estimate machine performance, consumption and costs in mechanised tunnelling by TBM:

- Net penetration rate;
- Cutter wear;
- Gross advance rate;
- Excavation costs.

It is considered the reference method for hard rock TBM prediction models, and its point of strength is the possibility to estimate TBM advance rate considering the utilisation factor, whose formulation is based on an extensive analysis of TBM cycle, a fundamental study that is became nowadays the key parameters to be studied in a detailed TBM prediction analysis. For detail, it is possible to refer to Bruland (1998).

The base of the model is the fact penetration and gross thrust per cutter disc can be correlated by the so-called penetration curve, whose equation is:

$$i_0 = \left(\frac{M_0}{M_1} \right)^b \tag{2.53}$$

where i_0 is the basic net penetration rate, expressed in [mm/rev], M_0 is the gross thrust per cutter disc in [kN], M_1 is the critical thrust in [kN], i.e. the gross thrust per cutter disc necessary to achieve a penetration of 1 mm per cutterhead revolution, and b is the

T&F Proofs – Not for Distribution

penetration exponent. This value of basic penetration must be corrected by a number of correction factors, which takes into account machine, intact rock and rock mass characteristics. In particular, rock mass fracturing has a great influence on TBM tunnelling, in particular the average joint spacing and the angle between the planes of weakness and the tunnel axis. The main parameters influencing the net penetration rate are reported in Table 2.9.

The net penetration rate can be calculated with the following steps and charts.

2.5.2.3.1.1 Equivalent fracturing factor (k_{ekv})

The equivalent fracturing factor combines the degree of fracturation of the rock mass, the angle between the main planes of weakness and the tunnel axis, and rock drillability.

The model includes four different behaviours: *joints*, i.e. continuous fractures in the rock mass; *fissures*, i.e. non-continuous fractures in the rock mass and foliation planes; *Marked Single Joints*, i.e. marked discontinuities (e.g., large foliation, fissure in mixed faces); and *homogeneous rock mass* (Table 2.10). The angle between the tunnel axis and the planes of weakness can be calculated as:

$$\alpha = \left|\arcsin\left(\sin\alpha_f \cdot \sin\left(\alpha_t - \alpha_s\right)\right)\right| \tag{2.54}$$

Table 2.9 Parameters influencing the net penetration rate

Rock mass parameters	*Machine parameters*
Joint frequency and orientation	Gross average cutter thrust
Drilling Rate Index, *DRI*	Average cutter spacing
Porosity	Cutter size and shape
	Rotational speed of the cutterhead
	Cutterhead power

Source: Bruland (1998).

Table 2.10 Fracture classes for both joints and fissures

Fracture class	*Spacing J_s (cm)*	*Classes with regard to J_s (cm)*
0	-	>240
0+	190	160–240
0–I	140	110–160
I–	90	60–110
I	40	7.5–60
I+	35	32.5–37.5
I–II	30	27.5–32.5
II–	25	22.5–27.5
II	20	17.5–22.5
II–III	15	12.5–17.5
III	10	8.75–12.5
III–IV	7.5	6.25–8.75
IV	5	4–6.25

Source: Bruland (1998).

T&F Proofs – Not for Distribution

where:

- α = angle between joints and tunnel axis;
- α_f = dip angle of the plane of weakness;
- α_t = direction of the tunnel axis;
- α_s = strike angle of the planes of weakness.

If more than one main joint family is present (maximum value recommended is 3):

$$k_{s,\text{tot}} = \left(\sum_{i=1}^{n} k_{s,i} \right) - (n-1) \cdot 0.36 \tag{2.55}$$

where:

- $k_{s,\text{tot}}$ = total fracturing factor;
- $k_{s,i}$ = fracturing factor for set i, from Figure 2.74;
- n = number of fracturing sets.

The equations for $k_{s,i}$ assessment are reported in Table 2.11.

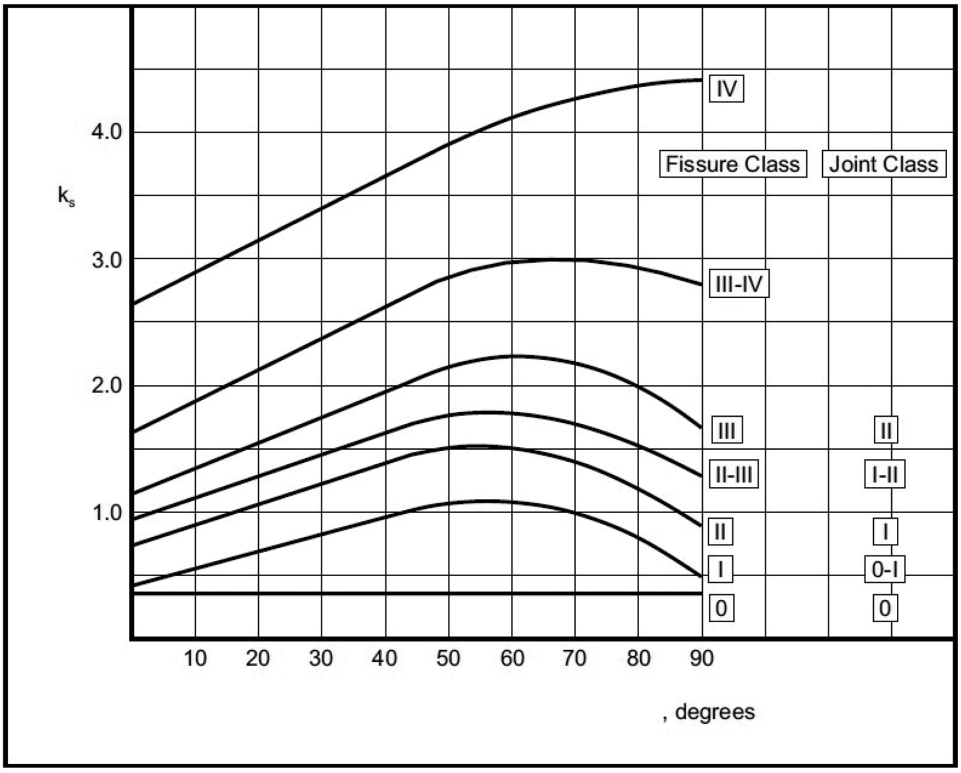

Figure 2.74 Diagram for $k_{s,i}$ assessment for different fissure and joint classes (Bruland, 1998).

T&F for Distribution

Table 2.11 Equations for $k_{s,i}$ assessment

FC	*JC*	*Correction factor* $k_{s,i}$	
		$\alpha < 40°$	$40° < \alpha < 90°$
0	0	0.36	0.36
I	0–I	$0.0133\alpha + 0.45$	$-0.0005\alpha^2 + 0.0564\alpha - 0.4901$
II	I	$0.0158\alpha + 0.75$	$-0.0005\alpha^2 + 0.0586\alpha - 0.1196$
II–III	I–II	$0.017\alpha + 0.93$	$-0.0005\alpha^2 + 0.0576\alpha + 0.1291$
III	II	$0.02\alpha + 1.16$	$-0.0007\alpha^2 + 0.0835\alpha + 0.2894$
III–IV	II–III	$0.0248\alpha + 1.63$	$-0.0005\alpha^2 + 0.0622\alpha + 0.8789$
IV	-	$0.0243\alpha + 2.37$	$-0.0003\alpha^2 + 0.0483\alpha + 2.1246$

Source: Bruland (1998).

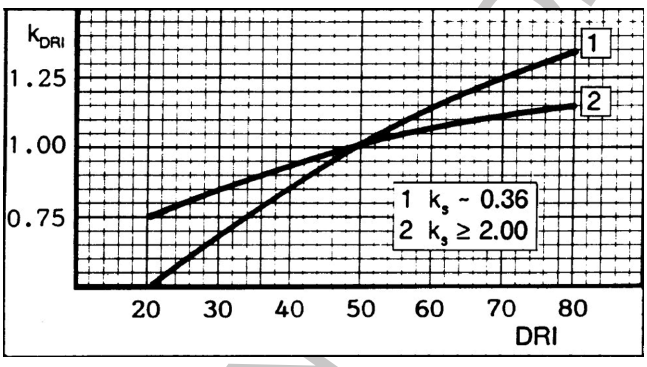

Figure 2.75 Diagram for k_{DRI} assessment (Bruland, 1998).

The correction factor for DRI, k_{DRI}, can be estimated through the plot in Figure 2.75, and through the equations:

- if $k_{s,tot} = 0.36$:

$$k_{DRI} = -0.0001\,DRI^2 + 0.0247\,DRI + 0.0293$$

- if $k_{s,tot} \geq 2$:

$$k_{DRI} = -0.00007\,DRI^2 + 0.0134\,DRI + 0.51$$

The correction factor for porosity, k_{por}, can be found by using the diagram in Figure 2.76.

The equivalent fracturing factor k_{ekv} can be calculated as follows:

$$k_{ekv} = k_{s,tot} \cdot k_{DRI} \cdot k_{por} \tag{2.56}$$

T&F Proofs – Not for Distribution

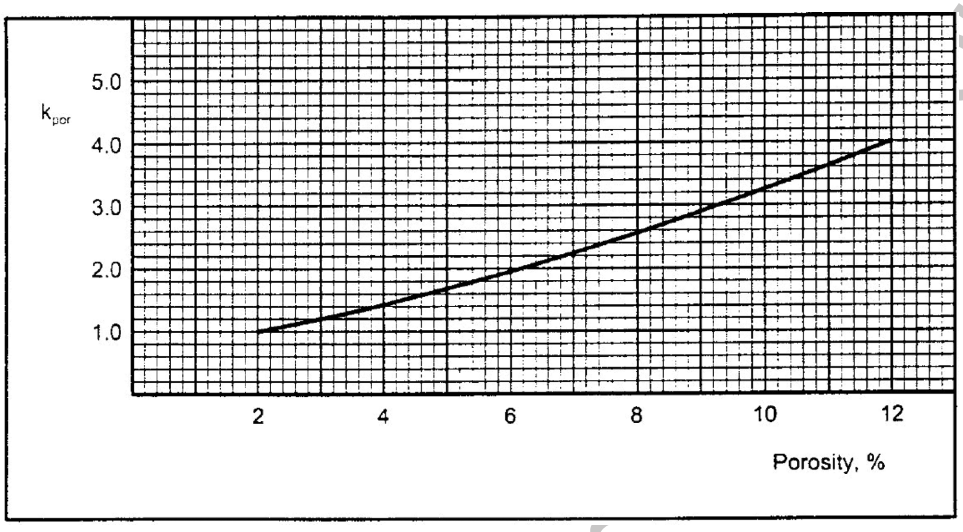

Figure 2.76 Diagram for k_{por} assessment (Bruland, 1998).

2.5.2.3.1.2 Equivalent thrust (M_{ekv})

The equivalent thrust per cutter is not dependent by the TBM diameter, but it is function of two correction factors, one for cutter diameter, k_d, evaluated through the plot in Figure 2.77:

$$k_d = 1 + 0.05 \cdot \frac{484 - \Phi_{\text{disc}}}{176} \tag{2.57}$$

The second one takes into account the average cutting spacing, k_a, i.e. the cutterhead radius over the total number of cutters, evaluated through the plot in Figure 2.78:

$$k_d = 1 + 0.05 \cdot \frac{484 - \Phi_{\text{disc}}}{176} \tag{2.58}$$

The equivalent thrust per cutter M_{ekv} is estimated as follows:

$$M_{\text{ekv}} = M_B \cdot k_d \cdot k_a \tag{2.59}$$

where M_B is the gross average thrust per cutter, not the available thrust capacity of the machine, but the actual thrust to be used.

2.5.2.3.1.3 Basic penetration rate (i_0)

The computation of the basic penetration rate i_0 comes from:

$$i_0 = \left(\frac{M_0}{M_1} \right)^b \tag{2.53}$$

T&F Proofs – Not for

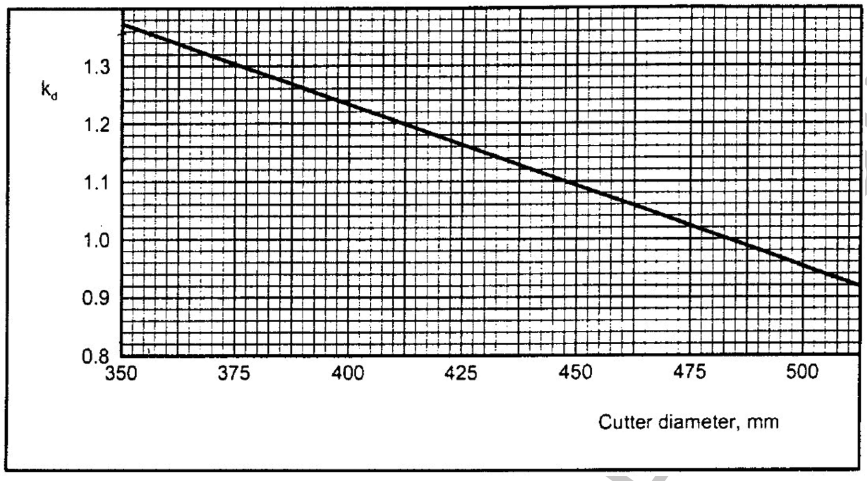

Figure 2.77 Diagram for k_d assessment (Bruland, 1998).

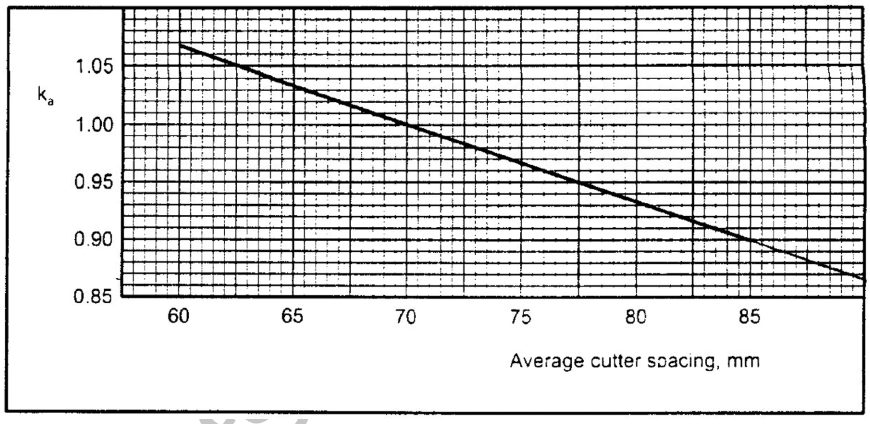

Figure 2.78 Diagram for k_a assessment (Bruland, 1998).

It can be expressed as a function of the equivalent thrust and the equivalent fracturing factor, by using the plot in Figure 2.79, expressed by the set of equations in Table 2.12.

The hypothesis assumed for Figure 2.79 are the following ones:

- if $\Phi_{disc} = 19''$ (483 mm), the rolling velocity of the gauge cutter $v_{cutter} = 2.62$ m/s;
- if $\Phi_{disc} = 17''$ (432 mm), the rolling velocity of the gauge cutter $v_{cutter} = 2.30$ m/s.

2.5.2.3.1.4 Net penetration rate (ROP_0)

The computation of the net penetration rate I_0, equivalent to ROP_0, comes from base equation:

T&F Proofs for Evaluation

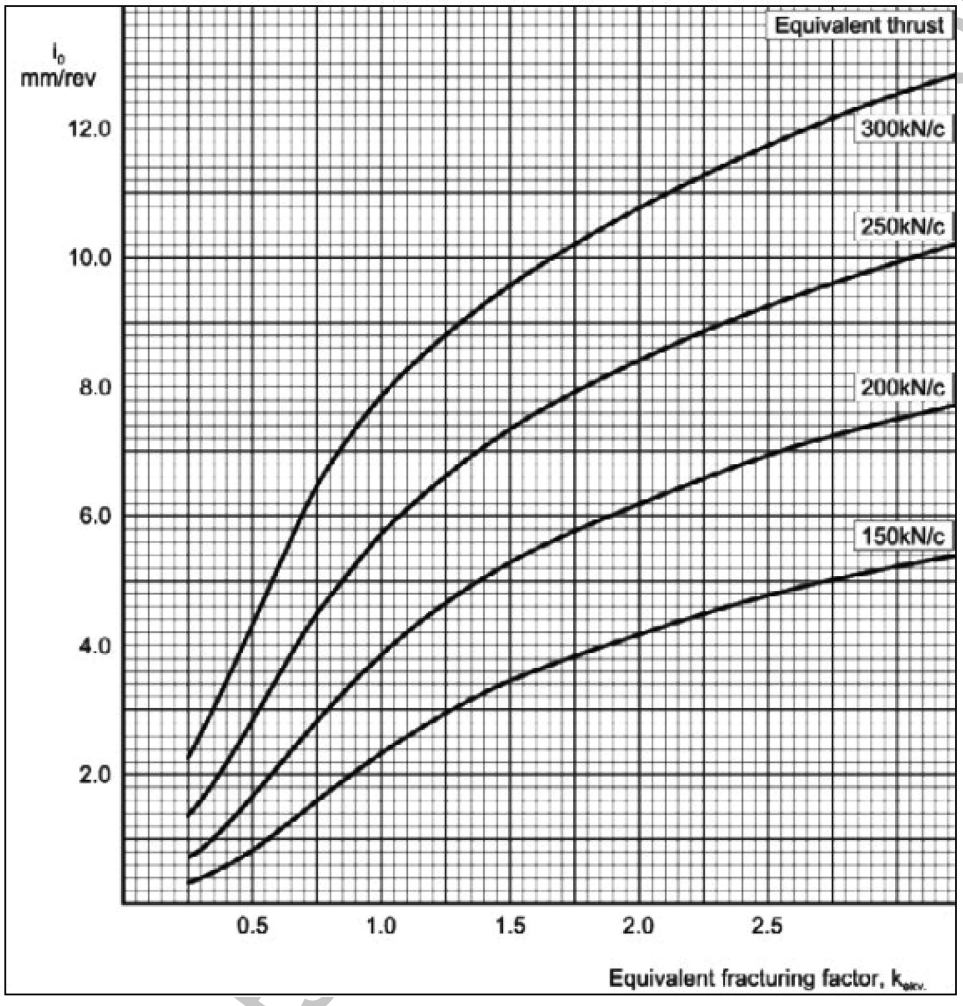

Figure 2.79 Diagram for i_0 assessment (Bruland, 1998).

$$\mathrm{ROP}_0 = I_0 = i_0 \cdot v_{\mathrm{rot}} \cdot \left(\frac{60}{1{,}000} \right) \tag{2.60}$$

2.5.2.3.1.5 Cutter wear

The average life of a cutter is influenced by several machine parameters and by rock abrasiveness. The main parameters influencing the cutter wear are reported in Table 2.13.

The average life of cutter rings, expressed in [h/cutter], can be calculated as follows:

$$H_h = \frac{H_0 \cdot k_\Phi \cdot k_Q \cdot k_{\mathrm{RPM}} \cdot k_N}{N_{\mathrm{TBM}}} \tag{2.61}$$

T&F Proof

Table 2.12 Equations for i_0 assessment

(kN/disc)		*Base penetration rate i_0 (mm/rev)*
100	$k_{ekv} < 1$	$-0.5208k_{ekv}^2 + 3.0521k_{ekv} - 0.8313$
	$k_{ekv} \geq 1$	$-0.36k_{ekv}^2 + 2.38k_{ekv} + 0.32$
150	$k_{ekv} < 1$	$-1.1489k_{ekv}^2 + 4.9531k_{ekv} - 1.2042$
	$k_{ekv} \geq 1$	$-0.4533k_{ekv}^2 + 2.96k_{ekv} + 0.0933$
200	$k_{ekv} < 1$	$-2.2825k_{ekv}^2 + 7.7135k_{ekv} - 1.4811$
	$k_{ekv} \geq 1$	$-0.3888k_{ekv}^2 + 2.814k_{ekv} + 1.524$
250	$k_{ekv} < 1$	$-5.5423k_{ekv}^2 + 13.522k_{ekv} - 2.3496$
	$k_{ekv} \geq 1$	$-0.3733k_{ekv}^2 + 2.92k_{ekv} + 3.0533$
300	$k_{ekv} < 1$	$-8.2721k_{ekv}^2 + 19.063k_{ekv} - 2.7904$
	$k_{ekv} \geq 1$	$-0.38k_{ekv}^2 + 2.91k_{ekv} + 5.47$

Source: Bruland (1998).

Table 2.13 Parameters influencing the net penetration rate

Rock mass parameters	*Machine parameters*
Rock type abrasiveness	Cutter diameter
Quartz content	Cutter type and quality
Porosity	Cutterhead diameter and shape
	Rotational speed of the cutterhead
	Number of cutters on the cutterhead

Source: Bruland (1998).

where:

- H_0 is the basic cutter ring life, estimated as a function of CLI and cutter diameter thanks to the plot in Figure 2.80.

  If $\Phi_{disc} = 17''$:

  - if $CLI < 30$

    $$H_0 = -0.0925\,CLI^2 + 6.1657\,CLI + 0.65$$

  - if $CLI \geq 30$

    $$H_0 = -0.0044\,CLI^2 + 1.3333\,CLI + 67.5$$

  Otherwise, if $\Phi_{disc} = 19''$:

  - if $CLI < 30$

    $$H_0 = -0.1425\,CLI^2 + 8.305\,CLI + 1.05$$

T&F Proofs – Not for Distribution

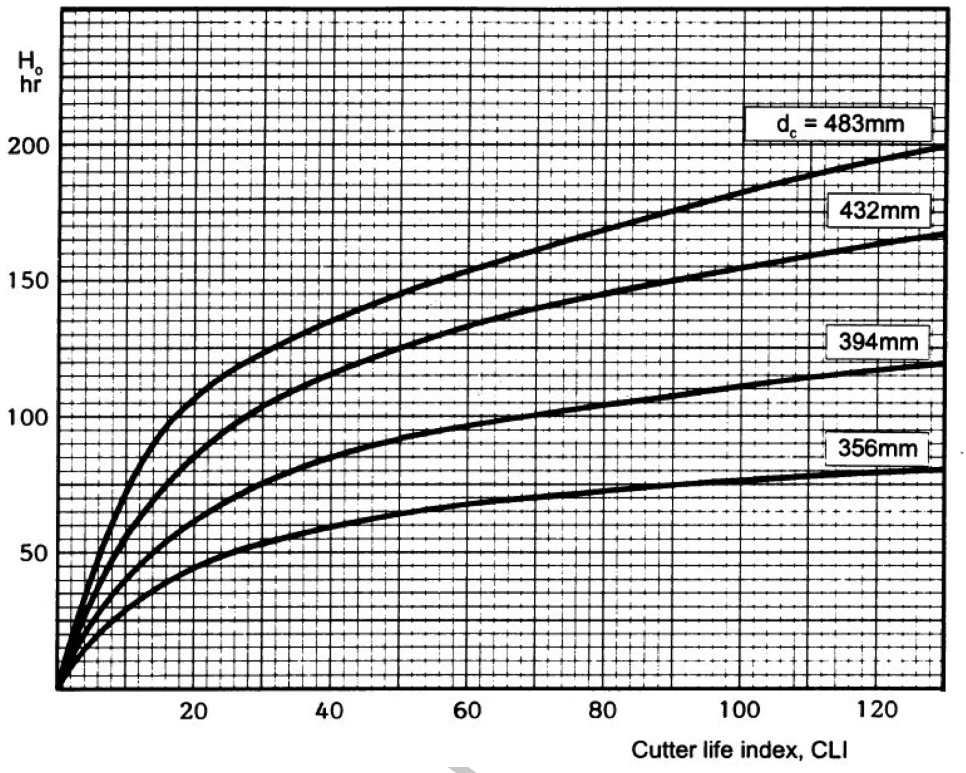

Figure 2.80 Diagram for H_0 assessment (Bruland, 1998).

- if $\mathrm{CLI} \geq 30$

$$H_0 = -0.0031\mathrm{CLI}^2 + 1.2483\,\mathrm{CLI} + 88.75$$

- k_Φ is the correction factor for TBM diameter and cutterhead shape, from Figure 2.81, in particular for flat cutterhead:

$$k_\Phi = -0.0065\Phi_{\mathrm{TBM}}^2 + 0.2061\Phi_{\mathrm{TBM}} + 0.474$$

- k_Q is the correction factor for quartz content q and the abrasiveness related to rock typology, from Figure 2.82 and the respective equations:
  - for mica-schists, mica-gneiss, gneiss and granites with $q < 0.27$:

$$k_Q = 0.00009q^2 + 0.004q + 0.6(\pm 0.08)$$

  - else:

$$k_Q = 0.00009q^2 - 0.0196q + 1.714(\pm 0.08)$$

T&F Proofs – Not for Distribution

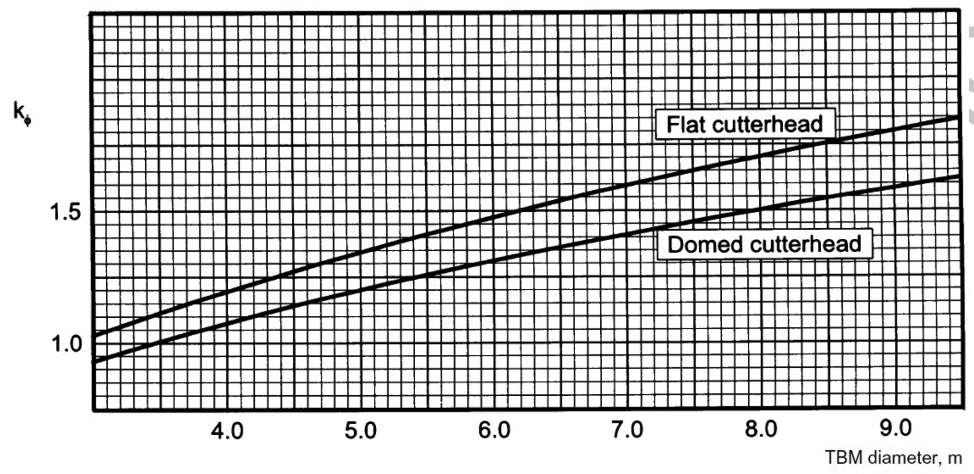

Figure 2.81 Diagram for k_Φ assessment (Bruland, 1998).

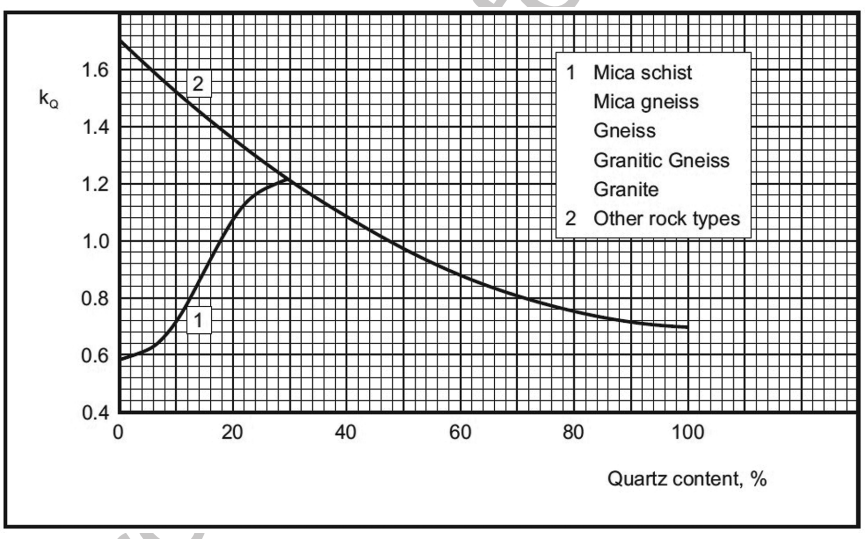

Figure 2.82 Diagram for k_Q assessment (Bruland, 1998).

- k_{RPM} is the correction factor for rotation speed of the cutterhead, estimated by the equation:

$$k_{RPM} = \frac{50}{\Phi_{TBM} \cdot v_{rot}}$$

where v_{rot} can be derived from Figure 2.83;

T&F Proof for Production

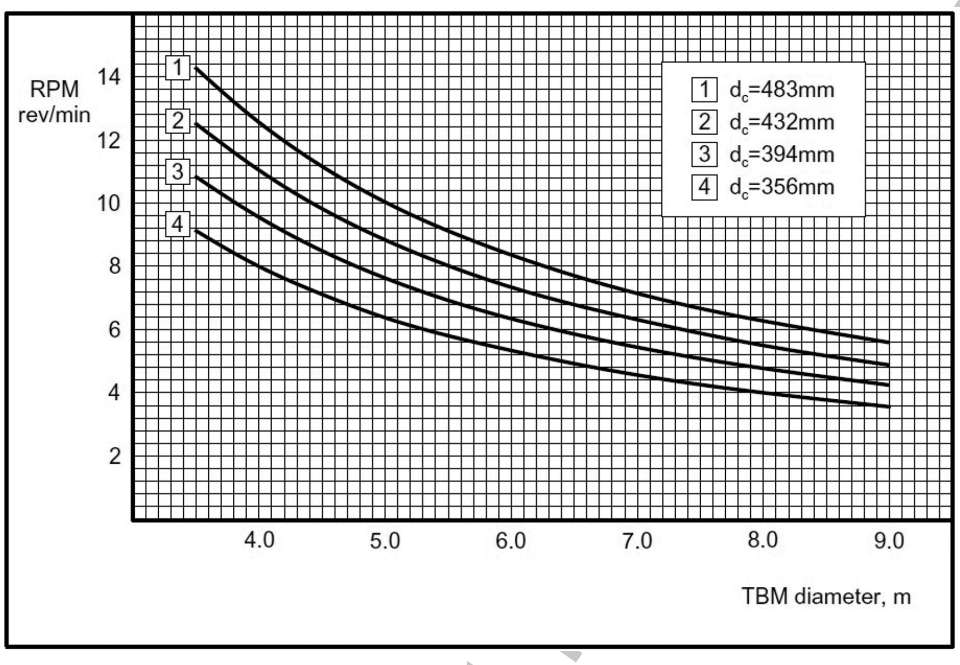

Figure 2.83 Diagram to obtain average rotation speed for a given Φ_{TBM} (Bruland, 1998).

- k_N is the correction n factor for the number of disc cutters, estimated by the equation:

$$k_N = \frac{N_{\text{TBM}}}{N_0}$$

where N_0 can be derived from Figure 2.84:

$$N_0 = \frac{\Phi_{\text{TBM}}}{2 \cdot s_{\text{cutters}}}$$

- N_{TBM} is the number of cutters on the cutterhead.

The average life of a cutter ring can also be expressed in [m^3/cutter], the so-called Cutter Ring Life CRL:

$$\text{CRL} = \frac{\Phi_{\text{TBM}}^2 \cdot \pi}{4} \cdot i_o \cdot \frac{v_{\text{rot}} \cdot 60}{1{,}000} \cdot H_h \tag{2.62}$$

2.5.2.3.2 MODELS BASED ON ROCK MASS PARAMETERS

The great majority of these studies are based on a non-linear multiple regression analysis, performed with ad-hoc commercial statistical software. Some authors tried

T&F Proofs – Not for Distribution

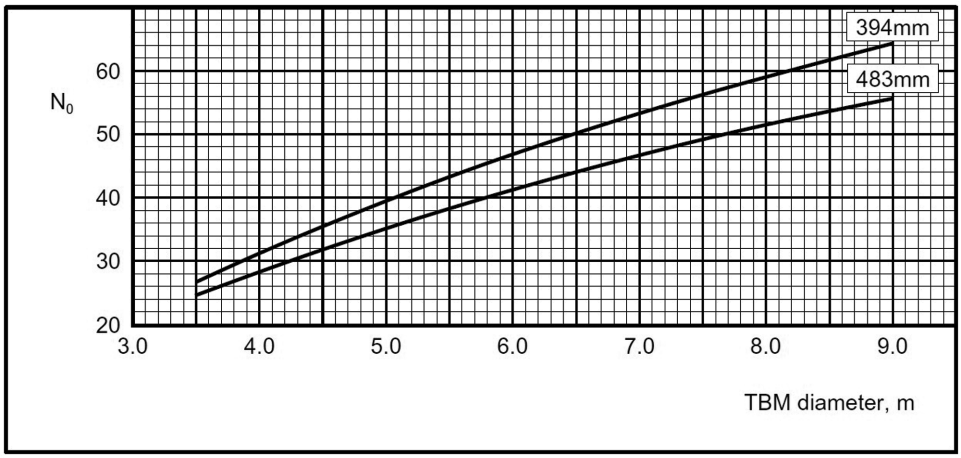

Figure 2.84 Diagram to obtain the average number of cutters for a given Φ_{TBM} (Bruland, 1998).

to apply other strategies, as the neuro-fuzzy model, based on data clustering and a back-propagation algorithm, and they are proposed by Alber (1996), Alvarez Grima et al. (2000), Yagiz (2008), Gong and Zhao (2009), Hassanpour et al. (2011) and Farrokh et al. (2012).

2.5.2.3.3 MODELS BASED ON ROCK MASS CLASSIFICATION

Several models are based on rock mass classification systems, in particular RMR, Rock Mass Quality Index (Q and Q_{TBM}), Geological Strength Index (GSI) and Rock Mass Excavability index (RME).

Different authors tried to find correlations between performance and rock mass classification, primarily because they are accepted and known worldwide. Classification systems have an innate limitation because they were born to understand rock mass stability and to design proper underground supports (Cassinelli et al., 1982; Innaurato et al., 1991; Barton, 2000; Ribacchi & Lembo Fazio, 2005; Bieniawski et al., 2006; Hamidi et al., 2010; Hassanpour et al., 2011).

2.5.2.4 Comparative analysis of the various models

In next tables, all characteristics of the 16 models listed above are summarised. As shown in following tables, all models try to predict the performance, while just four models also provide a solution for wear prediction (Tables 2.14–2.17).

Geological parameters most considered in prediction models are σ_c, Js, and α (more than 60%), and lithology, σ_t, RQD are considered in more than 35% of the cases. CAI and quartz content are considered in those models that study also the cutter wear, while joint condition, GSI, porosity, stress, water content and rock density register a low frequency.

T&F Proofs – Not for Distribution

Table 2.14 Prediction models summary: predicted parameters

	Predicted parameters		
Models	*Performance*	*Wear*	*Machine parameter*
CSM (1993, 2006, 2008, 2010)	X	X	X
Gehring (1995)	X	X	
NTNU (1998)	X	X	
Alber (1996)	X	X	
Yagiz (2008)	X		
Gong and Zhao (2009)	X		
Hassanpour et al. (2011)	X		
Farrokh et al. (2012)	X		
Alvarez Grima et al. (2000)	X		
Cassinelli et al. (1982)	X		
Innaurato et al. (1991)	X		
Barton (2000)	X		
Ribacchi and Lembo Fazio (2005)	X		
Hamidi et al. (2010)	X		
Hassanpour et al. (2011)	X		
Bieniawski et al. (2006)	X	X	
Frequency	**16**	**5**	**1**

Table 2.15 Prediction models summary: rock parameters

	Intact rock parameters					
Models	*Lithology*	Σ_c	σ_t	*CAI*	*q*	*P*
CSM (1993, 2006, 2008, 2010)	X	X	X	X	X	
Gehring (1995)		X		X		
NTNU (1998)	X	X		X	X	
Alber (1996)	X	X		X		
Yagiz (2008)		X	X			X
Gong and Zhao (2009)		X	X			
Hassanpour et al. (2011)	X	X				
Farrokh et al. (2012)	X	X				
Alvarez Grima et al. (2000)		X				
Cassinelli et al. (1982)		X				
Innaurato et al. (1991)		X				
Barton (2000)			X		X	
Ribacchi and Lembo Fazio (2005)		X				
Hamidi et al. (2010)			X			
Hassanpour et al. (2011)		X				
Bieniawski et al. (2006)	X	X		X		
Frequency	**6**	**14**	**5**	**5**	**3**	**1**

T&F Proofs – Not for Distribution

Table 2.16 Prediction models summary: rock mass parameters

	Intact rock parameters							
Models	J_s	*RQD*	J_w	J_c	α	σ, w	*N*	*GSI*
CSM (1993, 2006, 2008, 2010)	X				X			
Gehring (1995)	X				X			
NTNU (1998)	X				X		X	
Alber (1996)						X		X
Yagiz (2008)	X				X			
Gong and Zhao (2009)	X				X			
Hassanpour et al. (2011)		X						
Farrokh et al. (2012)	X							
Alvarez Grima et al. (2000)	X							
Cassinelli et al. (1982)	X	X	X		X	X		
Innaurato et al. (1991)	X	X	X		X	X		
Barton (2000)	X	X	X	X	X	X		
Ribacchi and Lembo Fazio (2005)								X
Hamidi et al. (2010)		X		X	X			
Hassanpour et al. (2011)	X	X	X		X	X		X
Bieniawski et al. (2006)	X	X	X		X	X		
Frequency	**13**	**7**	**5**	**2**	**11**	**6**	**1**	**3**

Table 2.17 Prediction models summary: disc and cutterhead

	Disc				*Cutterhead*			
Models	F_N	D_{disc}	w_{tip}	v_{lim}	D_{TBM}	n_c	s_c	v_{rot}
CSM (1993, 2006, 2008, 2010)	X	X	X	X	X	X	X	
Gehring (1995)	X	X						X
NTNU (1998)	X	X			X	X	X	X
Alber (1996)								
Yagiz (2008)								
Gong and Zhao (2009)								
Hassanpour et al. (2011)								
Farrokh et al. (2012)	X				X			
Alvarez Grima et al. (2000)	X	X						X
Cassinelli et al. (1982)								
Innaurato et al. (1991)								
Barton (2000)	X				X		X	
Ribacchi and Lembo Fazio (2005)								
Hamidi et al. (2010)								
Hassanpour et al. (2011)								
Bieniawski et al. (2006)					X			
Frequency	**6**	**4**	**1**	**1**	**5**	**2**	**3**	**3**

T&F Proofs — Not for Distribution

More than 40% of the models studied are influenced by the thrust per cutter F_N. In any case, low frequency of machine parameters is registered, also because all models referring to rock mass classifications are simple and they do not consider the interaction between the machine and the face.

2.6 SOIL TBM (SHIELDED TBM)

Based on the ITA Working Group 14 "Mechanized Excavation" and "Recommendations of DAUB", as already discussed in Chapter 8 of Volume 1 of the book, we refer here to TBMs according to the support typology that the machine is able to supply and the type of ground that it is able to operate in: hence, this chapter refers to a soil TBM as a Tunnel Boring Machine that provides an active support to the tunnel face by mean of a ground/slurry pressure and a passive support to the surrounding soil by mean as first of cylindrical shield and then by a concrete segmental lining, in order to mainly excavate in soils, as opposed to the "rock" TBM (Chapter 5) classification, making it particularly appropriate for shallow, urban tunnels in sensitive areas.

2.6.1 Main types - description and trends

Even if some other types of soil machines have been developed in the past, there are currently three main types of soil TBMs, two of them of well-defined and universally recognisable characteristics and a third family with a less clearly defined ones and already presented in Chapter 8 of Volume 1:

- *Slurry Pressure Balance TBMs (SPB):* also called mixshield, full-face shielded machines supporting the excavation front by a pressurised bentonite slurry;
- *Earth Pressure Balance TBMs (EPB)*: full-face shielded machines supporting the excavation face by the excavated ground itself, kept under pressure via the regulation of the extracting system (a screw conveyor);
- *Multimode/Hybrid TBMs (MM)*: under this nomenclature, many types of soil TBM machines can be included that do not fall under one of the definitions above, either because they can swap between two different systems for ground support (or no support at all), or because they work under a hybrid functioning principle (i.e., combining both support systems, as for instance the so-called Variable Density machine).

For each of them, the scope is to effectively work in a safe, reliable, and economic way under conditions where associated risks are properly considered, both for in-situ conditions (geometrical, geological, geotechnical, hydrogeological and environmental) and construction-related conditions (health and safety, close exiting infrastructures, on-site facilities' available space, etc.). Given the intrinsic working principles for each of them, not all conditions are optimal for each machine, while it is also true that, for all the manufacturers efforts, no machine is optimal for all conditions and therefore a compromise is required in the frequent case when non-homogeneous, uncertain and/or mixed conditions are present.

T&F Proofs – Not for Distribution

Some years ago, the EPB shield was a preferred option between contractors (reaching around the 85% of use rate at the turn of the century) for its simpler and cheaper operation principle in all projects where its application domain made it not clearly unviable. Given a contemporary risk-sharing approach where the contractor is generally fully responsible for the machine type choice, this sometimes happened even when Owners'- and Designers'- preferred choice would have been a different one at principle. The appearance of the so-called multimode machines, as well as a resurgence of projects in more difficult, or less homogeneous, or less known ground conditions, have reshuffled in some way the market, and stakeholders' trends and views, making the TBM choice less obvious nowadays. A study by AFTES GT4 on 200 projects (not only soil TBMs) showed that the market dominance by EPB machines was not clear anymore, being in the last decade the market ratio around one-half EPB, one-third SPB, and one-fifth MM.

Finally, the technological progress made in many cases possible, in the last decades, to overcome the specific boundaries of each type of shield (see next chapters, with so-called hybrid, multimode, variable density machines), therefore choosing the right soil machine is not anymore an obvious decision dictated by external constraints, but more and more a deliberate one where safety, certainty in cost and delays, are the main driving elements. These aspects are detailed in Section 6.3 and followings (Figure 2.85).

2.6.1.1 Slurry Pressure Balance TBMs (SPB)

The originally defined "Slurry Shield" (SS), as already discussed in Chapter 8 of Volume 1, is a machine that can support the excavation face by a pressurised bentonite slurry pumped into the excavation chamber. The slurry also works as an extracting medium for the excavated ground, which is pumped out of the tunnel to a treatment plant to be reused in the circuit while the soil is separated and eliminated.

The general description of the SS TBM is effectively described in the following table by Guglielmetti et al. (2008) (Figures 2.86 and 2.87).

Modern Slurry Pressure Balance (SPB) TBMs, however, descend from an improved version of the original scheme, originally called "Hydroshield" or "Mixedshild" to differentiate it from its parent version (Slurry Shield): the SPB function principle is identical to SS but the support pressure to the face is provided to the slurry thanks to a compressed air "bubble" (the so-called Air Cushion), providing better control over level and pressure fluctuations independently from the hydraulic circuit. From now on, we will refer as Slurry Pressure Balance Shield (SPB), which substituted completely the original SS in the market (Figures 2.88 and 2.89).

The **main advantages of the Slurry Pressure Balance Machine** can be summarised as follows:

- an **extremely precise control of support pressures**, as their distribution are linear and monitored via specific monitoring devices (pressure sensors, densimeters in the inflow line, outflow line and inside the chamber in one or many recirculating lines);

T&F Proofs – Not for Distribution

			Soil TBMs - Suitability and Application Ranges						
Dimension range		Tunnel Equivalent Diameter (m)	<2.5	2.5-5.0	5.0-8.0	8.0-10.0	10.0-12.5	12.5-15.0	>15.0
		Typical purposes	Services, Water facilities			Rail&Metro, Road, Hydro&water Multipurpose			Road Multipurpose
Slurry Pressure Balance (SPB) Shield TBM	Support type		Segmental lining						
	Geological-geotechnical contraints	Rock							
		Soils							
		Mixed conditions							
		Under water head							
		Face support required							
		Immediate tubbing required							
	Geometrical /site conditions contraints	Long&Deep tunnel							
		Shallow tunnel							
		Urban tunnel							
	Performance ranges	Average daily A.R. (m)	20-40	20-40	15-35	10-30	5-25	5-10	*
		Procurement - FAT (mths)	10-12	10-12	12-14	12-14	12-14	*	*
		Manpower (men/shift)	10	10	10-12	10-12	10-12	*	*
		Cutterhead - Power (kW)	1.000-1.300	1.300-1.500	2.500-3.500	4.000-5.000	5.000-7.000	*	*
		Cutterhead - Torque (kNm)	1.000-1.500	1.500-2.000	4.500-6.000	15.000-25.000	25.000-30.000	*	*
		Nominal Thrust (kN)	4.500-5.500	15.000-20.000	25.000-35.000	35.000-50.000	50.000-70.000	*	*
	Limiting Factors		Upper pressure limit: up to 15 bar						
Earth Pressure Balance (EPB) Shield TBM	Support type		Segmental lining						
	Geological-geotechnical contraints	Rock							
		Soils							
		Mixed conditions							
		Under water head							
		Face support required							
		Immediate tubbing required							
	Geometrical /site conditions contraints	Long&Deep tunnel							
		Shallow tunnel							
		Urban tunnel							
	Performance ranges	Average daily A.R. (m)	*	20-40	15-35	10-30	5-25	5-10	*
		Procurement - FAT (mths)	*	10-12	12-14	12-14	*	*	*
		Manpower (men/shift)	*	10	10-12	10-12	*	*	*
		Cutterhead - Power (kW)	*	1.300-1.500	2.500-3.500	4000-5000	*	*	*
		Cutterhead - Torque (kNm)	*	1.500-2.000	4.500-6.000	15000-25000	*	*	*
		Nominal Thrust (kN)	*	15.000-20.000	25000-35000	35000-50000	*	*	*
	Limiting Factors		Upper pressure limit: 5-6 bar						
Hybrid - Variable Density (VD) Shield TBM	Support type		Segmental lining						
	Geological-geotechnical contraints	Rock							
		Soils							
		Mixed conditions							
		Under water head							
		Face support required							
		Immediate tubbing required							
	Geometrical /site conditions contraints	Long&Deep tunnel							
		Shallow tunnel							
		Urban tunnel							
	Performance ranges	Average daily A.R. (m)	*	*	15-35	10-30	5-25	*	*
		Procurement - FAT (mths)	*	*	9-12	9-12	12	*	*
		Manpower (men/shift)	*	*	8-10	8-10	8-10	*	*
		Cutterhead - Power (kW)	*	*	2.500-3.500	4.000-4.500	4.500-5.000	≥5.000	*
		Cutterhead - Torque (kNm)	*	*	2.000-8.000	10.000-20.000	15.000-25.000	≥20.000	*
		Nominal Thrust (kN)	*	*	10.000-15.000	15.000-18.000	18.000-20.000	≥20.000	*
	Limiting Factors		Upper pressure limit: to be confirmed by supplier						

Figure 2.85 Suitability and performance for soil type TBMs. A.R., Advance Rate; FAT, Factory Acceptance Test.

T&F Publication

General description		Slurry shields – SS
1.	**Main field of application**	Soft ground with limited self-supporting capacity. In granulometric terms, slurry shields are mainly suitable for excavation in ground composed of sand and gravels with silts. The installation of a crusher in the excavation chamber allows any lumps that would not pass through the hydraulic mucking system to be crushed. The use of disc cutters also enables the machine to excavate through rock, if present. Polymers can be added to excavate ground containing too
2.	**Main components**	• Cutterhead (discs, blades or teeth). • Protective shield containing all the main components of the machine; the front part is sealed by a bulkhead which guarantees the separation between the shield and the excavation chamber (pressurized) containing the cutterhead. • Longitudinal thrust jacks. • Slurry and debris separation system (normally located on the surface).
3.	**Functioning principles**	The cutterhead supports the excavation tools; face-support pressure is provided by slurry: a suspension of bentonite or clay in water. A bulkhead divides the working chamber from the tunnel. The slurry suspension is pumped into the excavation chamber and penetrates into the ground forming a filter cake, i.e. an impermeable membrane (in fine ground) or impregnated zone (in coarse ground) that guarantees the transfer of face-support pressure to the excavation face. Excavated debris consists of natural excavated soil mixed with the bentonite- or clay-slurry. The resulting mixture is pumped (hydraulic mucking) from the excavation chamber to a separation plant, which enables the bentonite/clay-slurry to be partially recycled; the separation plant is normally located on the surface.

Figure 2.86 Slurry shield general description by Guglielmetti et al. (2008).

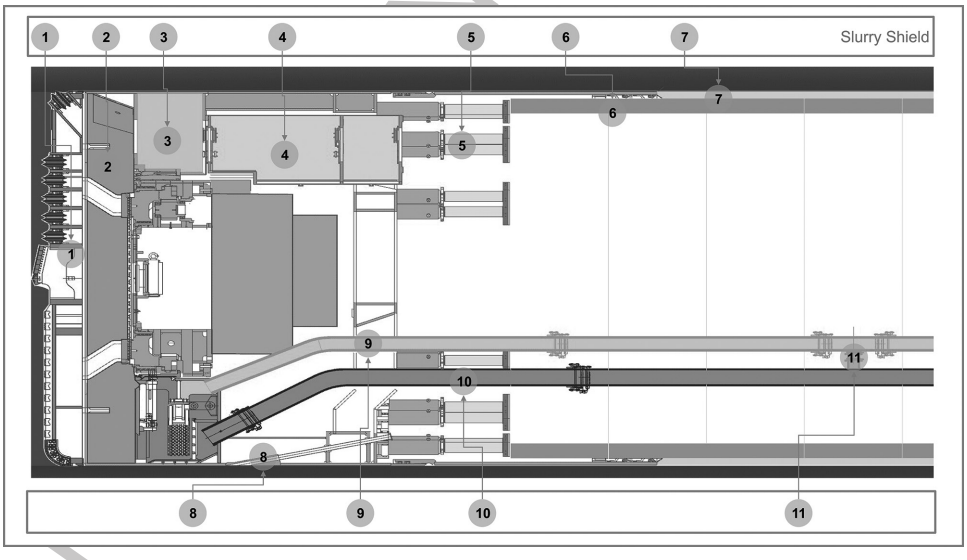

Figure 2.87 Scheme of a standard slurry shield general layout (1) cutterhead, (2) excavation chamber, (3) working chamber, (4) man lock, (5) thrust cylinders, (6) tunnel lining, (7) grout backfilling, (8) shield structure, (9) slurry feed, (10) slurry line, (11) by-pass. (Courtesy of Geodata.)

T&F Not for distribution

General description		Hydroshields - HS
1.	**Main field of application**	The same as for slurry shields
2.	**Main components**	Similar to those described for slurry shields
3.	**Functioning principles**	In the Hydroshield there are two bulkheads: one separates the working chamber from the tunnel and the second divides the chamber in two parts, leaving a communication in the lower part. The upper part of this intermediate chamber is filled with compressed air (Air Cushion). Connection to an air compressor and a valves control system allows to adjust the support pressure at the face independently from the hydraulic circuit (supply of bentonite slurry and mucking of slurry and natural ground).

Figure 2.88 Hydroshield (SPB) general description by Guglielmetti et al. (2008).

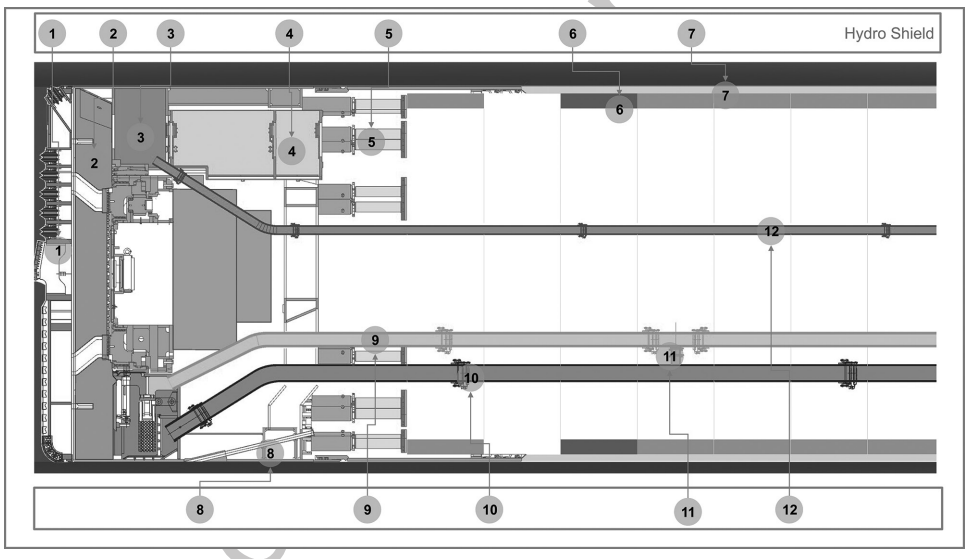

Figure 2.89 Scheme of a Slurry Pressure Balance (SPB) general layout (1) cutterhead, (2) excavation chamber, (3) working chamber-air cushion, (4) man lock, (5) thrust cylinders, (6) tunnel lining, (7) grout backfilling, (8) shield structure, (9) slurry feed, (10) slurry line, (11) by-pass, (12) air line. (Courtesy of Geodata.)

- related to the previous factor, the **settlement control in the tunnel face**, **on the crown and above the tunnel** is theoretically higher than the one obtained with a EPB machine, as the support pressure control is very precise. This is especially true in very coarse and granular soils;
- **high hydrostatic upper limits**. As ranges in the 5 to 8 bars are nowadays not unusual, actual records are held by projects Lake Mead (USA), Istanbul Strait Crossing

T&F Proof

(Turkey) and Hallansas (Sweden) with maximum pressures ranging from 12 to 15 bars (Anagnostou, 2014);

- **evacuation of the muck by pipes**, without the typical constraints of conveyor belts (radii of curvatures, maximum slopes, accidental pouring into the tunnel, etc.). As a corollary, permanence of the excavated material in a mud suspension throughout the excavation process up to treatment of separation on the outside. This aspect has acquired a renewed importance in cases where the exposure of personnel to contact with the material must be minimised or eliminated, such as in the case of material containing asbestos, or in the presence of gas as discussed in Chapters 5 and 6 of Volume 1 of the book. In other contexts, the treatment of the muck in the site treatment plant, a cost- and equipment-intensive feature necessary for the very functioning of the excavation system, paradoxically supposes a competitive advantage compared to the method of counterpressure control by means of earth (EPB), due to the absence of foams or other additives that are required therein: the cleaning process of the material in the slurry plant allows an almost immediate disposal of the muck, generally also where environmental regulations require of long periods of temporary rest. These aspects are becoming increasingly important in many contexts such as the Italian one.

The **main criticalities of the Slurry type** machines are the following:

- the need to **build and operate a Slurry Treatment Plant** (STP), and the separation of the excavated material from the bentonite fluid to be reused. The STP, depending on the size of the excavation face and the speed of advancement required, requires high capacities and therefore dimensions, and costs, in initial investments, which can prove difficult to fit in high-density urban areas;
- with fractions of fine-grained materials, the process of **separating the excavated material from the bentonite fluid** can become incrementally difficult, costly in terms of process times, and therefore in terms of the size of the plant and the cost of supply and operation of the same;
- the **precision and reliability of the systems used for quantifying the slurry flows** entering and leaving the excavation chamber, on which the system is based to check and promptly detect any over-excavations, and/or unexpected leaks of fluid in the ground (blow-out) or other deviations of the excavation process, are impacted by factors whose combined effect can be difficult to detect in changing or anomalous conditions:
  - *Balancing of the excavated volume*: it is the result of an equilibrium in which only two (slurry inflow Q_{ba} and extraction outflow Q_{be}) out of four elements (the previous plus the Slurry-loss outflow Q_f and the excavated material Q_{ex}, see Figure 2.90) can be directly measured. In the event of an increase in slurry losses in the soil (rheological characteristics not suitable for the soil of the specific section), an increase in the excavated volume may not be promptly detected.
  - *Greater or less suitability of the specifically designed bentonite fluid*: it may depend on numerous internal factors (quality of materials such as bentonite, water, additives, suitable engineering of the mix design for each excavated ground, tight control measures of the rheological parameters, etc.) as well as exogenous

T&F Proofs – Not for Distribution

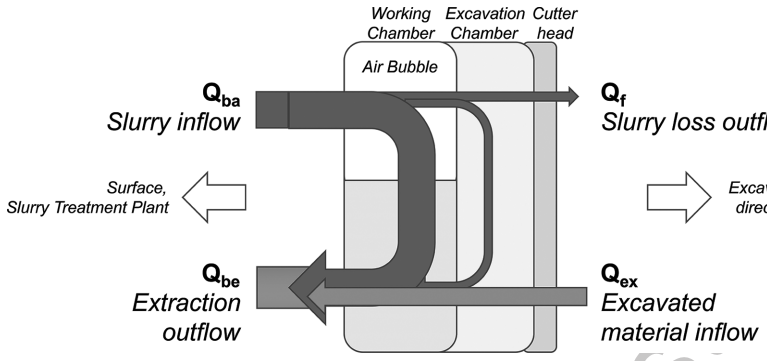

Figure 2.90 Slurry Pressure Balance – Flow balance.

(soil grain size curves, natural water content, void index, possible cohesion of the matrix, hydraulic loads, types of soil permeability, etc.), making optimal control a process of high complexity and specialisation, with a very specific know-how potentially difficult to find in the market or with a high specific labour cost;

- *High flows and "response time" factor*: continuous interpolation of measured values at different points and its interpolation over time, with the resulting oscillations. A deviation of 20% in flows in a 1,500 m^3/h range (typical for a 8–10 m diameter machine with usual advance rates) can cause an over-excavation of 5 m^3 for every minute that passes before being detected by the operator, without any other parameter raising alarms. Therefore, the response time in case of deviations must be addressed with tight and traceable control measures, to mitigate uncontrolled risks of slurry losses or over-excavations;
- *Cross-checking of excavated volumes by weight measurements*: cross-checking can only take place in the separation plant, but with a time lag that makes only "trend" analysis possible and not immediate implementation.

- dependence of the excavation process on the **extension of the pipes**: it is, a process that interrupts the advance rate, every 6–12 m (indicative ranges). In such interruptions, a system for the prevention of leaks of the bentonite liquid in the backup must also be set up, and in case being necessary to avoid the contact of the personnel with the excavated materials (see conditions with asbestos materials), there must be pre-arranged decontamination areas and procedures to be activated in each pipe change (Figure 2.91).

As for the dimensions reached by this type of machine, these are found in all ranges and in both extremes, as it is possible to find machines with smaller diameters (the slurry mode is often used in small pipe-jacking micro-tunnelling machines, where the dimensions do not allow to install screw systems and also with minimal heights differences) up to the machine with the largest diameter produced to date (of 15–16 m range in diameter) since the applied torque to the cutterhead is strongly reduced compared to EPB TBMs.

T&F Proofs – Not for Distribution

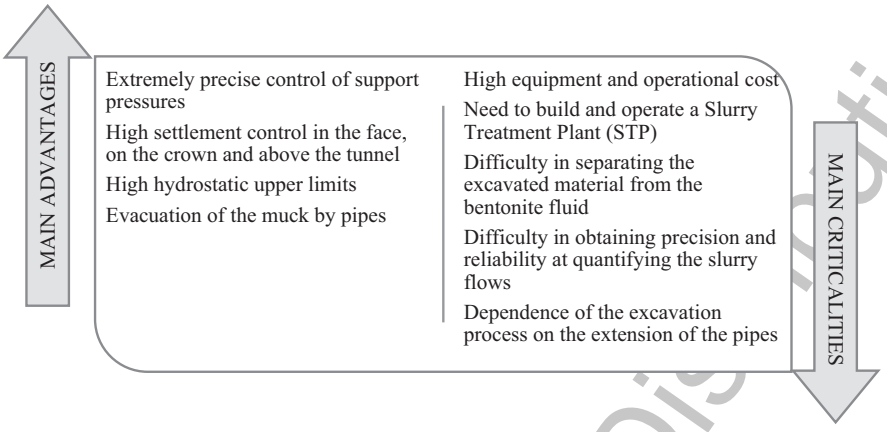

Figure 2.91 Slurry Pressure Balance (SPB), summary of main advantages and criticalities.

2.6.1.2 Earth pressure balance TBMs

The Earth Pressure Balance TBM (usually called EPB-TBM) machine was an original development of the slurry concept with the possibility of using some excavated soil to create the medium able to apply the pressure. This approach as discussed in Chapter 8 of Volume 1 of the book requires that the natural soil enters in the pressure chamber where is maintained in pressure by the management of the advancing speed of the whole shield and the speed of the extraction of the muck by the screw conveyor. This concept is described as optimal rate advance and has been discussed by Guglielmetti et al. (2008). The key issues in this type of machine are the properties of the excavated soil that must be transformed in a pulpy material able to transmit the pressure.

This "transformation" of the natural soil is obtained by the so-called process of soil conditioning that, due to its importance, is discussed in the Section 6.

The general description of the Earth Pressure Balance TBM is contained in the following table (Guglielmetti et al., 2008) (Figures 2.92 and 2.93).

The main advantages of the EPB machines are the following:

- *Easier installation and operation with reference to other type of machines*: although the screw conveyor represents a mechanical element of considerable size, cost and centrality in the conception and definition of the machine, its operation is considerably more immediate in the excavation phase and requires professional skills less specific and difficult to find in the market. At any time, it is possible to interrupt the flow of outgoing material by slowing down, or interrupting, the rotation of the screw or by closing the guillotine valve downstream of it, stopping any risk of overflow almost immediately. Furthermore, it is possible to have an immediate -although indirect via a unit weight confirmation of the excavated volumes by means of the weighing systems installed downstream of the screw, which can be redundant. While residual uncertainty about the unit weight fluctuations or errors is still present, trends control (i.e. variation from ring to ring, or on advance and

T&F Proofs – Not for Distribution

General description		Earth Pressure Balance - EPB
1.	**Main field of application**	Its main field of application is in soft ground with presence of groundwater and with limited or no self-supporting capacity. The typical application fields of EPBS are silts or clays with sand. The use of additives, such as high-density mud or foams, enables excavations in sandy-gravely or gravely ground. The use of disc cutters enables the machine to excavate in rock.
2.	**Main components**	• Cutterhead: rotates with cutting spokes. • Protective shield: similar to that described for closed slurry shields. • Longitudinal thrust jacks.
3.	**Functioning principles**	The cutterhead supports the excavation tools; face support is provided by the excavated ground that is kept under pressure inside the excavation chamber by balancing the volume of the ex-tracted and excavated material, and by the thrust jacks on the shield. Excavation debris is re-moved from the excavation chamber by a screw conveyor that allows the pressure control by variation of its rotation speed.

Figure 2.92 Earth Pressure Balance (EPB) general description by Guglielmetti et al. (2008).

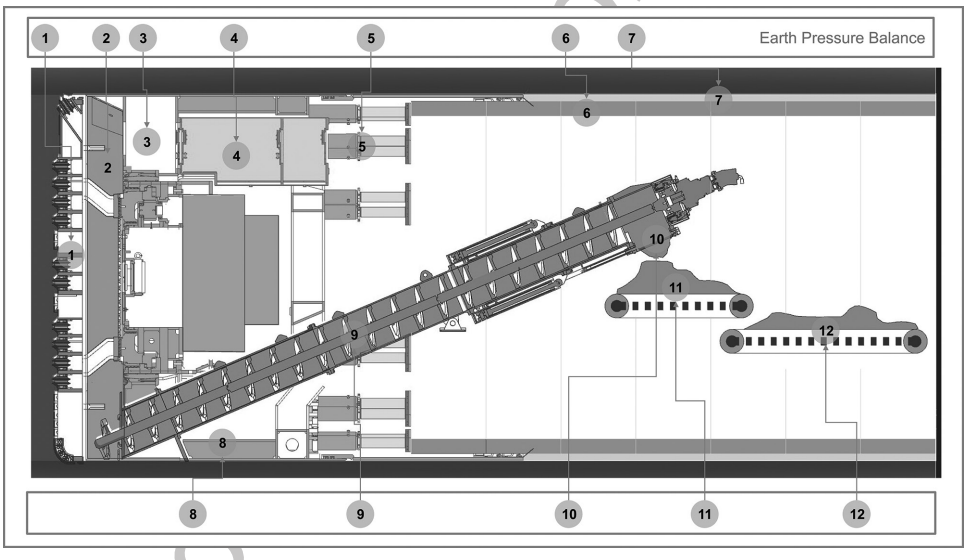

Figure 2.93 Earth Pressure Balance (EPB) schematic outlook. (1) Cutterhead, (2) excavation chamber, (3) working chamber, (4) man lock, (5) thrust cylinders, (6) tunnel lining, (7) grout backfilling, (8) shield structure, (9) screw conveyor, (10) guillotine, (11) primary belt conveyor, (12) secondary belt conveyor. (Courtesy of Geodata.)

time-based rates) allow a certain degree of cross-control which is usually satisfactory when the face is made of a single ground type. An immediate visual confirmation of any changes in the face is also possible by inspecting the material on the belt, and the outgoing material flows are generally more immediately assessable by the control staff;

T&F Proof

- *Classical field of application can be widened* with conditioning that can also be tailored and modified on the field and according to immediate needs;
- *Lower equipment and operational cost*: EPB is usually considered as a cheaper solution in the face-pressure TBM systems, as it does not imply the capital expenditure of a Slurry Treatment Plant, its operational cost, and the higher skills required in terms of slurry management. However, this perception sometimes derives from not fully incorporating all buried costs and externalities in the analysis;
- *Possibility of working in open mode or closed mode* (as already discussed in Chapter 8 of Volume 1).

The main criticalities of the EPB machines are the following:

- *Relatively lower hydrostatic upper limits/need for "plug" creation in the screw*: the upper limits are defined by the ground characteristics and its abilities to dissipate the differential pressure gradient (from the maximum value in the excavation chamber, at the beginning of the screw) to the normobaric pressure at its discharging end, along the screw conveyor. Greater gradients can be managed with a longer screw conveyor, in some cases extending well into the first gantry of the back-up system;
- *Difficulties in the control of support pressures along the tunnel face*, as their distribution must be interpolated by pressure sensors which measure a medium which is less homogeneous than the Slurry in the SPB machine: it is made of air, foam, water, bentonite, additives, mixed with different layers of soil. As those elements are mixed in the excavation chamber, and each of them has a significantly different density, their optimal mixing depends on several factors including the combination of rotation and advance speed, and additives use (at a cost). Therefore, higher advance speed, and reduction of cost-intensive additives, can come hand in hand with lower precision in face-pressure measurement and control, but higher advance rates, which is an ill-incentivised cocktail which potentially increases risks (typically settlements, over-excavations) and requires, in turn, higher control measures to be properly managed. In addition, the lack of a homogeneous mixture can cause segregation of the material (air/foam fractions piling in the crown, reducing the counterpressure able to be provided to the tunnel face), lack of ground extraction, clogging, additional stress to the mechanical components;
- *Impact of boulders*: due to the geometrical and functional constraints of the screw conveyor, it is difficult to fit a stone crusher in the excavation chamber. Therefore, the screw must be dimensioned to allow up to a certain dimension of boulders to be extracted without damaging the system. This requires bigger dimensions (diameter, pitch, axis), higher torque and assumptions based on the expected biggest boulders to be encountered, which in some heterogeneous grounds can prove difficult;
- *The measurement of the excavated volumes occurs only through indirect (weight) measurements*: This does not represent an important problem in the case of known and stable conditions and the tunnel face is made of a single ground type, but can lead to deviations in the presence of mixed, heterogeneous, and variable soil conditions at the tunnel face, in time and space;

T&F Proofs – Not for Distribution

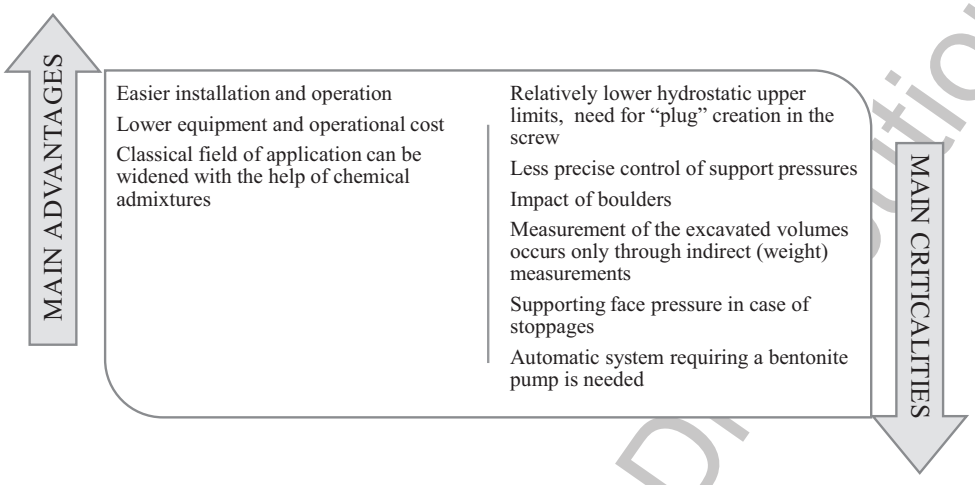

Figure 2.94 Earth Pressure Balance (EPB), summary of main advantages and criticalities.

- *Problem of the management of the supporting face pressure in case of stoppages for large size machines*: the ground itself, when less cohesive conditions are found, cannot provide the support to the tunnel face when the excavation chamber is emptied. An intermediate phase additivating bentonite to the chamber, working in a similar way to a machine in slurry mode, therefore can be necessary before or during stoppage. But, differently from a slurry machine, this process requires including bentonite to an earth + foam +water mixture already present in the chamber, and with a supply system less efficient than the SPB one. The duration of this process, and its secured completeness, are not easily assessable in the short term and therefore requires a safety factor, meaning at the practical level that the preparation effort for any intervention increases in time;
- in most of the projects, it is mandatory to guarantee the face pressure in any ground conditions at any time, and therefore, an **automatic system requiring a bentonite pump**, able to immediately supply bentonite support in the excavation chamber at a sustainable rate in case of pressure drops, adds complexity and features to the basic layout (Figure 2.94).

As for the dimensions reached by this type of machine, the largest diameter produced to date is about 15 m, while most usual diameters are still in the range of 7–10 m (typically, single- and twin-tube metro sections or single railway tunnel), extremely frequent. Smaller diameters (below 5 m) are possible but less frequent (for the problematic fitting of the screw and whose required length could require a double section, i.e., both an inclined and horizontal screw concatenated).

2.6.1.3 *Multimode/hybrid shields*

In recent years, the TBM market has seen the proliferation of solutions that try to fit a machine to a wider range of different ground conditions, especially for tunnels which

T&F Proofs – Not for Distribution

pass through hard rock, soft ground, boulders, clays, etc. in different parts of their alignment.

The result is the so-called Multimode/Hybrid concept (or several commercial names following supplier's branding: CREG's Dual Mode series, Herrenknecht's Multimode & Variable Density series, Robbins' Crossover series XRE/XSE, only to mention some examples), machines that generally are designed to switch between two of the previously described TBM working principle (usually, directly inside the tunnel with no need of additional structures but with a certain stopping time) or combine their characteristics. It is important to highlight that exist a difference between Multimode i.e. machines that *can switch* between working principles, and Hybrid TBMs (with its most common version called the Variable Density), i.e. machines which *combine* two or more types of functioning principles.

2.6.1.4 Multimode TBMs

Multimode TBMs provide designs that feature advantages from two different types of TBMs, and under varying ground types can switch between their functioning principles, for example from a Hard Rock TBM, converted into an EPB-TBM. The main differences deal with the different systems for removing the excavated material, and the composition and characteristics of the support medium if required (Earth Pressure Balance (EPB) and Slurry Pressure Balance (SPB) TBMs)) (Figure 2.95).

The most common multimode TBMs are summarised:

For the **combination of an Open Face TBM with an Earth Pressure Balance machine**, the EPB machine operating principle is substantially adopted without completely filling the excavation chamber. Changes in the cutterhead "dressing" (i.e., the disposition and number of different cutting tools) are usually performed to better adapt to rock or soil conditions, and special attention must be granted to conditioning, spoil dimensions, wear phenomena, all impacting on performance levels. In some cases, a secondary retractable muck ring for belt conveyor material removing can be installed in the centre, requiring some additional conversion measures to be taken. According to Robbins, for machines above the 12 m-diameter threshold, both a belt conveyor and a screw conveyor can be concurrently installed reducing significantly conversion delays.

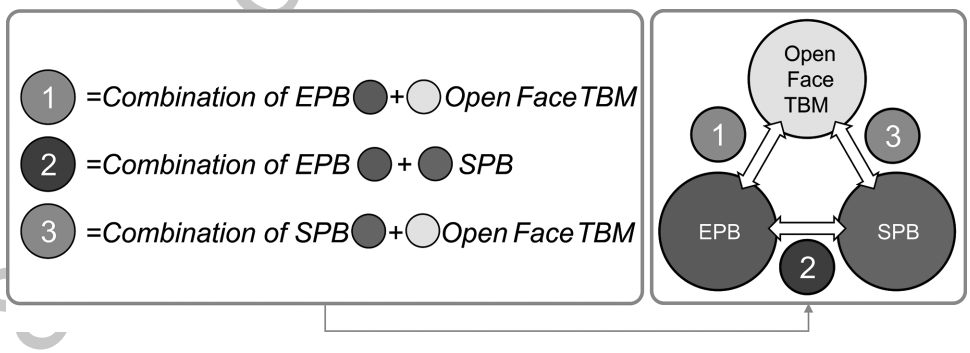

Figure 2.95 Multimode TBMs, general description.

Proofs – Not for Distribution

For the **combination of an Open Face Rock TBM with a Slurry machine**, the main challenge is the extraction of the excavated material, which, in the SPB mode, occurs via slurry circuit while in Open mode requires a muck ring for a belt conveyor. Installing both systems can prove difficult when diameters are lower than 9–10 m, requiring additional conversion measures to be taken (disassembly of some elements in the excavation chamber, stone crusher, etc.). Also, cutterhead are usually significantly more open in Slurry machines (its measure being a ratio between the openings in the face and the face section, called Opening Ratio, is usually over 40%) than in Open Face Rock TBMs, where the tools and their supporting structure usually requires stiffer arms to allow the transmission of a higher thrust (with opening ratio frequently lower than 30%). Therefore, a detailed engineering work to determine the correct opening ratio for the specific project and machine is required and is an important task.

For the **combination of an Earth Pressure Balance TBM with a Slurry machine**, again the presence of both a screw conveyor and a slurry circuit (with its working chamber behind the excavation chamber which is not required in a normal EPB mode) adds complexity and space requirements that are not always available in machines below 9–10 m threshold. Considerations whether extensions of the classical fields of application by means of ground conditioning are possible should be duly analyzed, instead of providing a combined system with increased complexity. The Hybrid concept of the Variable Density TBM, which could be considered as an evolution of the EPB-SPB multimode, is analysed in the following paragraph.

The main criticalities of the Multimode machines can be summarised as follows:

- *Need for "conversion" operations* that impact on times and costs to a lesser or greater extent, the need for specific site and personnel to carry out this conversion, which may or may not coincide with a singular accessible point of the drive (such as underground stations, shafts and lateral adits not only required for this function)
- *Dimension ranges* have an impact on effective "multimodality", mostly impacted by different ways of removing the excavated material: while on bigger diameters it is possible to both install a muck ring (for open TBM excavation) and a stone crusher (for slurry excavation) to allow a smooth switch between Open and SPB mode, and even install a double system with a screw conveyor and a slurry circuit in the invert section (for EPB + SPB mode), in small size machines, this is not possible mainly for space availability.
- combining features of machines with different functioning principles increases the *cost* of the resulting machine, its operational complexity, as well as the required skills for specificizing, manufacturing, operating and maintain such TBMs. Due to the mentioned complexities, also the, residual value for such TBMs can be allocated in the lower boundary, contributing to a sensitive cost increase overall cost (Figure 2.96).

2.6.1.5 Variable density hybrid machines (VD)

The most widely known hybrid machine type is the so-called Variable Density (VD) machine, produced by Herrenknecht. According to the manufacturer, "[without] major mechanical modifications, the machine can switch between four different tunnelling modes directly in the tunnel. This means that geological and hydrogeological changes

T&F Proofs – Not for Distribution

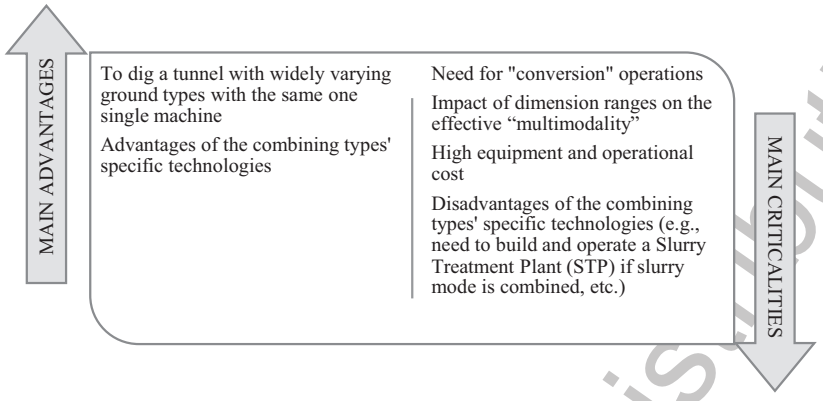

Figure 2.96 Multimode Shields (MM), summary of main advantages and criticalities.

along the alignment can be managed with extreme flexibility." The operational principles are presented in Chapter 8 of Volume 1.

The extraction of the excavated soil, one of the most peculiar elements of a multimode/hybrid system and in general terms also of all soil TBMs (as shown in the previous paragraph) is always performed via a screw conveyor, at the end of which a "flushing" slurry box is to supply additional bentonite or liquid and evacuate the material via pipes or, when the ground allows it, via a conveyor belt. The decision between mucking systems in the tunnel depends on the characteristics of the excavated ground, and the proportions between coarse and cohesive fractions along the alignment. If the cost of installing an additional mucking system (belt) in the tunnel is compensated by higher productivity in at least a significant fraction of the tunnel, its use can be considered; otherwise, only pipe extraction is generally adopted.

As an additional feature improvement first adopted for peculiar soil characteristics of the Klang Valley MRT Project in Greater Kuala Lumpur in Malaysia (highly erratic karst features with eroded limestone rock beneath a layer of top soil), with a substantial risk of suddenly encountering cavities, a thicker and heavier suspension can be adopted to balance the earth and water pressure at the tunnel face (hence the High Density Slurry Material (HDSM) concept, and the VD characteristic name). In this case, a specific HDSM mixing plant is required on surface where the high-density material is prepared (Figure 2.97).

The main advantages of the VD machines are the following:

- possibility of **modifying the operating mode during the excavation**, without the need to carry out switch interventions/stoppages on the excavation chamber or on the extraction system;
- most of the advantages of the SPB (high hydrostatic upper limits, evacuation of the muck by pipes, etc.)
- some of the advantages of the EPB (possibility of using the machine in EPB mode with lower operational cost)
- in case of specific geological constraints (e.g., cavities), **a thicker and heavier suspension can be adopted to balance the earth and water pressure at the tunnel face**.

T&F Proofs – Not for Distribution

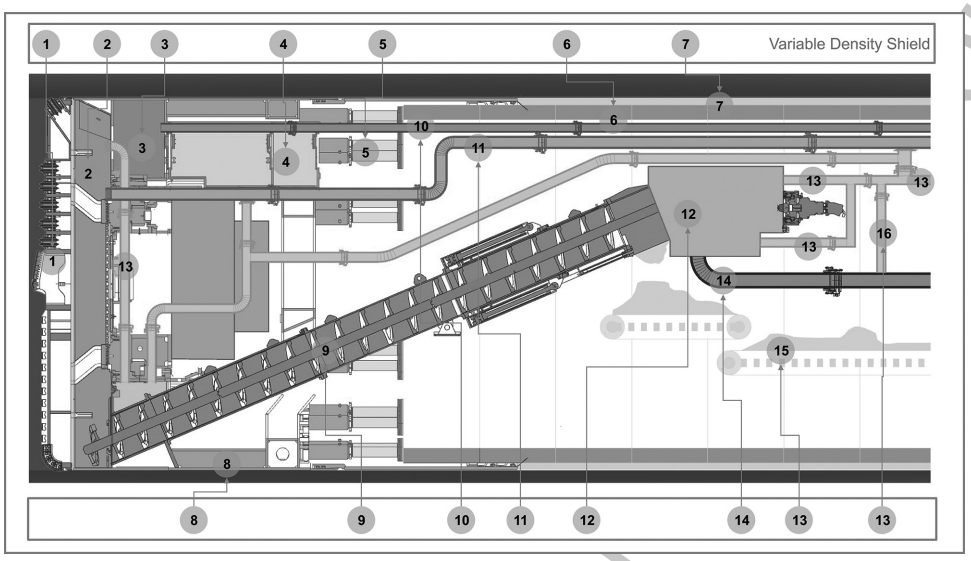

Figure 2.97 Variable Density (VD) schematic outlook. (1) Cutterhead, (2) excavation chamber, (3) working chamber, (4) man lock, (5) thrust cylinders, (6) tunnel lining, (7) grout backfilling, (8) shield structure, (9) screw conveyor, (10) air line, (11) high-density line, (12) slurry box, (13) slurry feed, (14) slurry line, (15) primary belt conveyor, (16) by-pass. (Courtesy of Geodata.)

The main criticalities of the VD machines are the following:

- the **overall mechanical complexity of the machine is significantly higher**, increasing the complexity also on the operational effort in terms of spare parts, manpower, specialised assistance by the supplier. Also, supply cost is significantly higher to both Slurry and EPB with similar performance;
- he **installation of a double mucking system** (belt for excavation in EPB mode, slurry circuit with an STP outside the tunnel for SPB mode) is required, which significantly affects the overall cost of the auxiliary systems and therefore the overall costs of the excavation and complexity in the tunnel. Each system must be accordingly extended at regular pace and maintained during the excavation, with significative operational costs and efforts. This is one of the reasons for the "fully equipped" VD configuration, able to fully switch between modes at any time, being not always implemented, as decision-makers (usually in the Contractor's side) finally opt for having only one of the features fully implemented (i.e. SPB mode with muck extracted via fluid system). In short, while the machine could technically use both mucking systems, for economic reasons, only one mucking system is implemented, thus reducing the potential flexibility (Figure 2.98).

As for the dimensions reached by this type of machine, even if its application is somehow very recent (its first application dating 2013), diameters ranging between 7 and 12 m have been already manufactured.

T&F Proofs - Not for Distribution

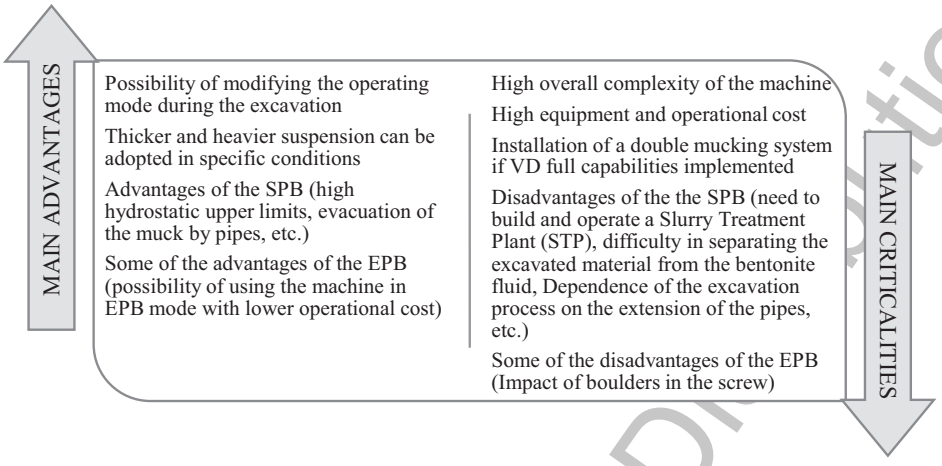

Figure 2.98 Variable density hybrid machines (VD), summary of main advantages and criticalities.

2.6.1.6 Boring cycle

For all types of soil TBMs, **the boring cycle is identical to the one described in the Single shield rock TBM**: a series of hydraulic cylinders contrasts with the pre-casted segmental ring erected within the tail shield, providing the required thrust to push the cutterhead and the shield itself until the end-of-stroke is reached (as already discussed in Volume 1). At that point, a new ring must be assembled to allow the cylinders to be retracted and start the cycle again. Therefore, the boring cycle is an alternance of excavation phases and ring assembly phases, during which it is not possible to excavate. The research of manufactures is active on the subject and the prospect of a continuous mining process (both as a full continuous mining process or a quasi-continuous like the Double-Shield re-gripping, which stops the advance for just 3–5 minutes at each cycle), is on the way with some applications that can be reported.

In Slurry Pressure Balance Shields, an important feature of the boring cycle is the need of **extension of the slurry pipes**, which are required to keep the advance phase performing. Depending on the length of the pipes (usually in the 6–12 m range), the resulting cycle is determined. For soil machines that rely on a belt conveyor for muck extraction, stoppage in the excavation cycle for ancillary systems are less frequent, as the usual ranges for belt extension are in the 200–300 m range (for conveyor belt, this is due to a "conveyor tank" that is usually installed inside the tunnel), like the extension of electric cable connecting the external power supply to the machine transformers. Ventilation duct extensions, pipes for water supply, and other ancillary systems have little impact compared to the previous ones, as they can usually be performed during ring assembly or accommodated during other stoppages.

Similar to the rock TBM cycle is the impact of cutterhead maintenance on the excavation cycle: cutterhead tools and wear protections must be checked, maintained, and substituted according to their specific wear in order to maximise productivity and avoiding structural parts of the cutterhead to be damaged. However, as in soil

T&F Proofs – Not for Distribution

machines, the conditions of the alignment are frequently under groundwater table, or anyway under specific face-pressure requirements, **cutterhead maintenance acquires a specific weight due to the need of being performed usually under hyperbaric conditions**: in order to constantly provide face support, the medium filling the excavation chamber (slurry or excavated material) must be replaced by compressed air, confined in the front by a filter cake previously established. Routine inspections, differently as in rock TBMs are therefore less easy to be performed and take longer, as they involve task teams specifically trained, able and authorised to work under tight regulations and with tabulated working time (both in compression and de-compression phases). Depending on working pressure, maintenance interventions that under normobaric conditions could take less than a shift can last days.

2.6.1.7 Soil TBM main components

Most soil TBM main components are similar or identical to shielded rock TBMs: the main drive, the main shield, the main thrust cylinders, motors and reducers, the segment erector, the back-up gantries, the belt conveyor, and extension deck, all share the common implant of such type of TBM. The description of some elements has a specific design in soil TBMs discussed in the following (Figure 2.99).

The **cutterhead** design and dressing is the result of a compromise effort related to the specific geologic context, given the need of structural stiffness, housing different types of cutting tools (also, interchangeable in the alignment, e.g., allowing to install rock cutters for concrete diaphragm cutting during TBM in/out processes even if the entire alignment is in soft soil), and the need for the excavated ground to easily flow into the excavation chamber even under sticky behaviour. Ancillary systems related

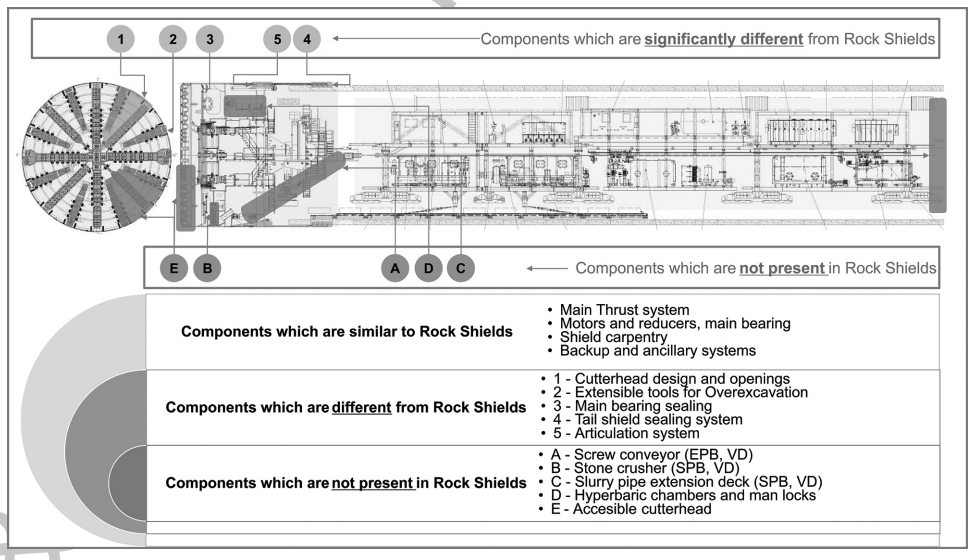

Figure 2.99 Components which are similar, different, and not present in soil TBMs versus rock shields, schematic outlook.

Taylor & Francis Not for Distribution

to the cutterhead, as foam and water lines, can be included in the same group and are differently dimensioned for excavation in soil. To allow **over-excavation** only where and when needed (i.e., maximising it in tight curves, and reducing it in straight sectors, minimising gaps around the shield that have an impact on settlements), is usually performed via hydraulic systems that extends one or several rippers, and that can be activated and controlled from the pilot cockpit. Theoretically, these systems can also extend the ripper(s), and therefore overexcavate, only in one or several sectors of the tunnel face, i.e. extending and retracting at each cutterhead revolution, obtaining an ovalised section which maximise the only in the curve's radius direction.

As well known, the **main bearing sealing** and **tail shield sealing systems** are fundamental core elements for the operation under water gradients, which are the usual conditions for soil TBMs. For the main bearing, sealing rings must be designed for high-pressure operation, and usually are made of redundant systems in order to guarantee the main bearing working life (usually, at least 10,000 hours) in safe operation: labyrinth seals, sealing grease continuous injections in multiple points, etc. As for the tail shield sealing, the usual brushes lines adopted in shield TBMs are frequently increased in number but also coupled with emergency sealing systems that allow to counteract sudden inflow of water, grouting material, at high pressure, (which can even compromise the overall safety of the tunnel if uncontrollable for instance, under river or sea excavations), and when brushes are damaged. Maintenance of tail brushes remains a critical point in the industry at present date (Figure 2.100).

Main thrust cylinders are relatively similar to rock TBMs. There is also often an intermediate level of cylinders acting between the main thrust and the main drive unit, allowing it to translate independently from the main thrust (for instance, to allow some degree of retraction of the cutterhead). Another subset of cylinders usually provides

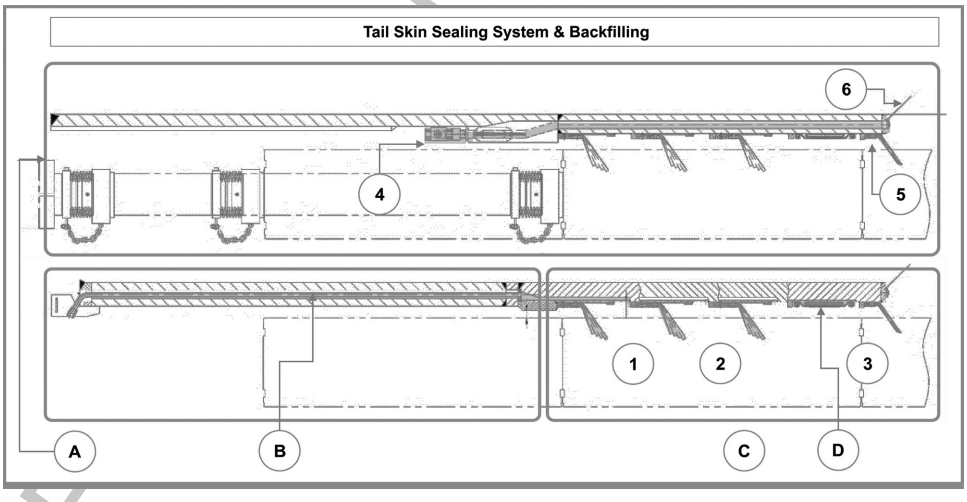

Figure 2.100 Backfilling lines, in the top part of the figure, (a) grout inlet (4), tail brushed (5), spring tale platesTail shield sealing system, schematic outlook in two sections for a typical three-chamber system, in the bottom part of the figure: (b) connection to the grease lines (c) sealing chambers (1–2–3) and brushes lines (four lines), (d) emergency sealing expandable system, in the third chamber.

T&F Not for Distribution

some additional steering capability by means of an articulation of the shield, which can be active or passive. The **combination of main, secondary and articulation cylinders** can vary significantly in soil machines, also depending on the tunnel diameter, and keeping the need for complete insulation from outer pressure of all components of the shield, adding a complexity layer to the one required in rock TBMs.

As it comes to the extraction system of the excavated material, soil TBMs differ significantly from their rock sisters, incorporating new and completely different elements: Screw conveyors, Stone crushers, Slurry pipes extension decks, hyperbaric chambers and accessible cutterhead are the most important ones.

The **screw conveyor** allows to extract the material from the excavation chamber, dissipating the outer pressure along the Archimedes' screw, and controlling the extraction rate and the face pressure at once, thus performing a multiple control and performance function in Earth Pressure Balance shields. Reliability of its mechanic systems (the main rotor, one or several high-torque hydraulic motors, guillotines to stop flow, etc.), carpentry (wear plates in the housing and in the blades) and control elements (pressure and rotation sensors, redundancy of safety systems, monitoring, etc.) are fundamental in the excavation process, as well as in the productivity of it. The screw also is one of the most voluminous elements of the entire TBM, and extends well over the shield edge, which makes it sometimes a dimensioning element for extraction shafts (Figure 2.101).

The **stone crusher** is a special device made of hydraulic-controlled jaws which enables to crush boulders or voluminous ground elements before they are extracted from the excavation chamber. In EPB TBMs, the inclusion of a stone crusher presupposes no minor geometric difficulties in the excavation chamber, therefore screw conveyors are usually dimensioned (in diameter and pitch of the helix) to manage the most critical expected rock blocks, if present in the soil, so as not to require any stone crusher. Therefore, the stone crusher is usually associated only to the slurry-type machines' pipe extraction of the excavated ground, usually granular and with potential presence of cemented blocks, or stone boulders, which would not be extractable through 3″–4″ pipes in a slurry suspension (Figure 2.102).

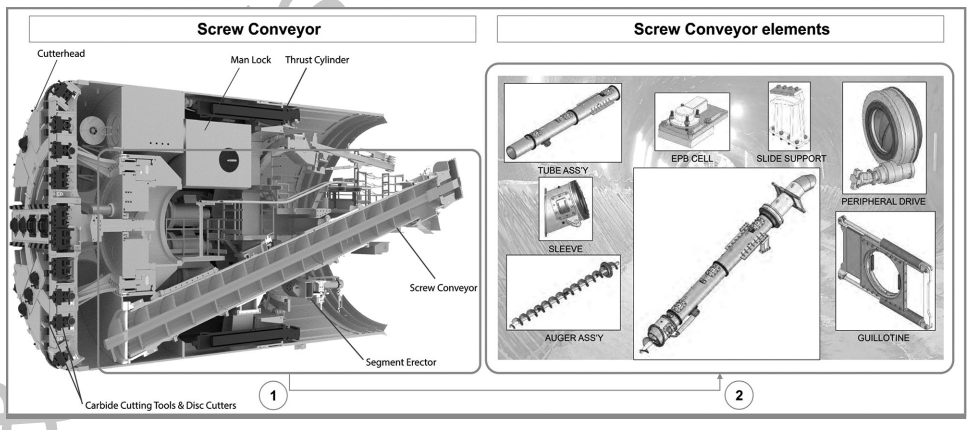

Figure 2.101 Screw conveyor typical assembly (a). (Modified from ROBBINS.) Typical components (b). (Modified from LOVAT.)

T&F Proofs – Not for Distribution

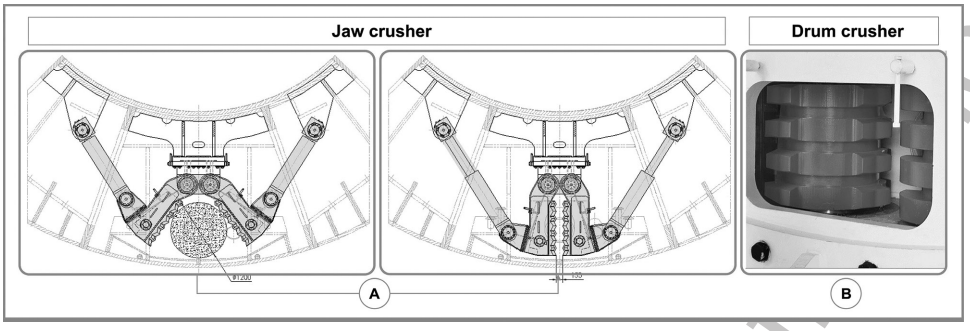

Figure 2.102 Stone crusher typical assembly. (a) Jaw crusher, front view. (From CREG.) (b) Drum crusher, view. (From Herrenknecht.)

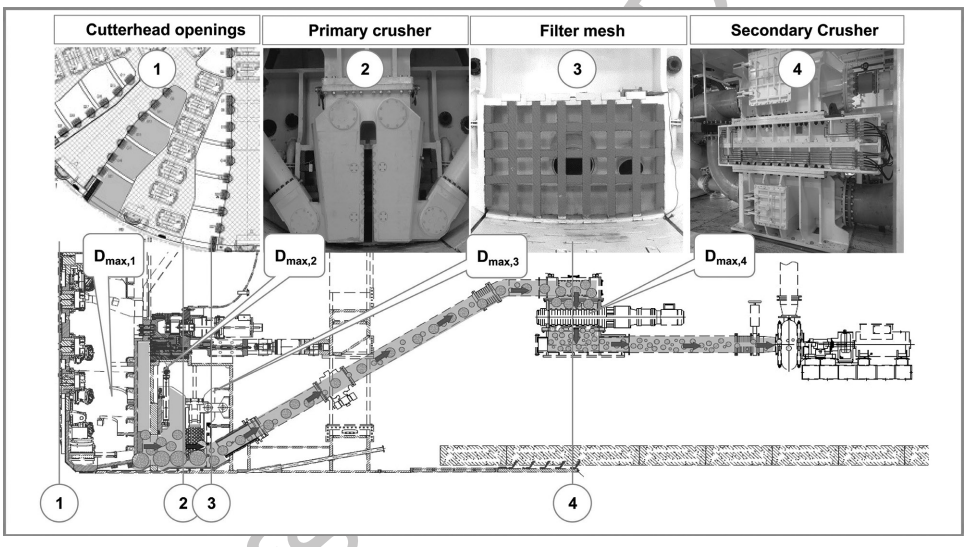

Figure 2.103 Stone crusher assembly, profile, and complementary systems: cutterhead opening and filtering bars (1), primary crusher (2), filter mesh (3), secondary crusher (4). (Courtesy of CREG.)

In particular cases, secondary stone crushers have been adopted and positioned in the backup, in order to further reduce the maximum extracted size grains, thus increasing the slurry transport efficiency, risk of pipes wear, and subsequent spillages (Figure 2.103).

In the VD hybrid machines, where hydraulic muck extraction is performed but a screw conveyor is also used to extract the ground from the chamber, the stone crusher is usually positioned in the slurry box sector, i.e. after the screw. When the complete configuration of the VD machine is adopted (see Section 6.1.5), a belt conveyor assembly deck is also included in the back-up gantries, as well as the conveyor belt along the tunnel and an extension deck outside the tunnel, as in Rock TBMs and EPB machines.

T&F Proofs Not for Distribution

The **slurry pipes extension deck** is a set of devices, usually made of telescopic pipes, hydraulically controlled, which enables to progressively elongate the slurry circuit pipes while performing the advance. The length of the allowed stroke before performing the insertion of a new unit of pipes sets the system's specific cycle, similarly to the cycle of the conveyor belt extension in the remaining types of shields. The main difference lies in the length of the elements (usually in the 6–9 m range for pipes' extension, 200–300 m belt extensions), and therefore the relative incidence of the process on the excavation cycle, generally greater (4–5 times the incidence in hours per metre) in the case of the pipes' extension. Due to the high flows, diameters and pressures involved in the circuit, telescopic systems are preferred versus hose reels (which are in turn used for compressed air, industrial water, dewatering systems and other ancillary).

Arguably, one of the most recognisable elements in soil TBMs, **hyperbaric chambers** (also referred to as air locks, man locks) play a fundamental and unavoidable role in the excavation process: allowing maintenance teams to pass - in a regulated and safe way - from the parts of the machine subjected to environmental pressure (i.e. the internal section of the lined tunnel) to the parts subjected to hyperbaric pressures (i.e. the cutterhead, the excavation chamber and the working chamber - if a slurry machine). This passage, which must take place according to controlled procedures to avoid risks for the health of the specialised teams as well as allow the management of specific emergencies, takes place through successive tight chambers, which can be isolated by means of hatches and connected to pressure systems that precisely regulate the environmental conditions in every moment. This operation is normally a complex task with an important impact of the OH&S procedures (Figure 2.104).

When TBM dimensions allow it, hyperbaric chambers are double in number, allowing that a first team performs the exit and decompression steps in the first chamber after a work shift, while a new team enters via the second chamber. In addition to an interface "pre-chamber" between the two isolated environments, a secondary separation may exist when there are additional needs for isolation (such as, for example, decontamination in the presence of asbestos fibres, etc.). Specific chambers, different in

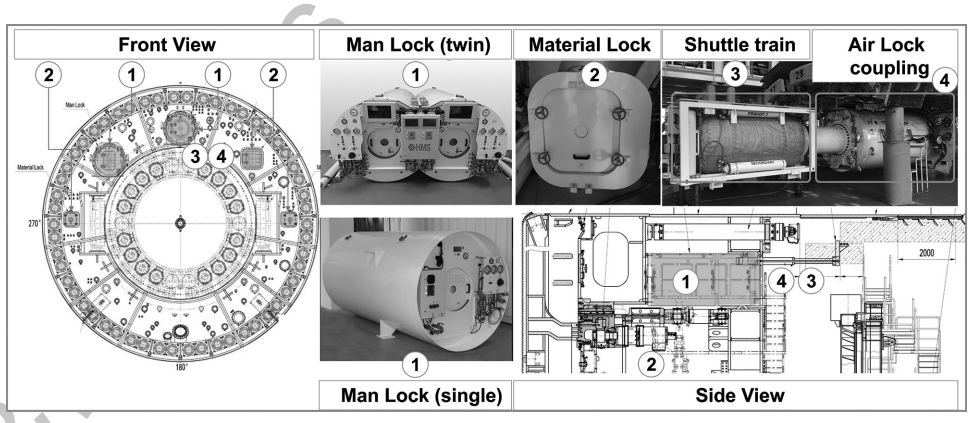

Figure 2.104 Hyperbaric chambers, and complementary systems: front view, (1) man lock. (Single and double assembly, from HMS.) (2) Material lock, (3) shuttle train and (4) air lock coupling, for a >12 m diameter TBM range. (Courtesy of CREG.)

T&F – Not for Distribution

dimensions and openings, are also used for the passage of materials only. In the event that the working pressures are very high, specific systems called **shuttle trains** have been adopted, in which the hyperbaric chamber itself, once the worker enters it after the work shift, is separated from the access door and then moved outside the tunnel, maintaining the required pressure at all times, so that decompression can be carried out in more comfortable environments (special apartments in which workers can also remain at an higher-than-atmospheric pressure between interventions).

With bigger diameters and soft soils, and in order to avoid higher face-pressure requirements and hyperbaric working conditions, **normobaric accessible cutterheads** were developed so that workers could replace discs and scrapers inside the accessible head, avoiding operations in hyperbaric conditions in the excavation chamber. The back loading cutting tools are isolated from the normobaric accessible carpentry and once the sealing guillotine is closed, the capsule that contains the excavation tool is extracted completely and then removed (Figure 2.105).

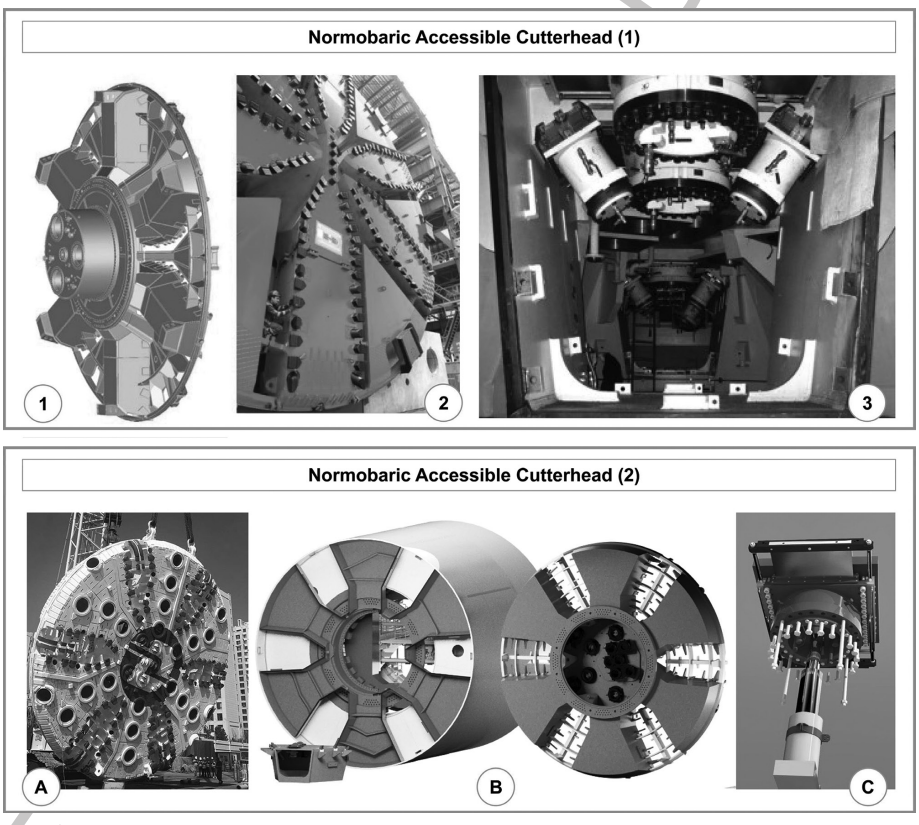

Figure 2.105 Accessible normobaric cutterhead: (1) and (2) accessible cutterhead front view and schematic section Elbe Tunnel (Germany, from Herrenknecht), accessible cutterhead for the project Dalian (China, from CREG), (4) and (5) cutterhead carpentry crossing section and cutters modules, Istanbul Strait Road Tunnel Crossing (Turkey, from Herrenknecht), extraction of the cutter modules (from CREG), 3D scheme for accessible cutterhead (from CREG).

T&F Distribution

2.6.2 Limits of actual classification: the soil TBM as a process, hybridisation as the new normal

The features described in Chapter 1 shows how the current classifications are gradually relaxing and becoming less rigid, due to the following elements of "contamination/hybridisation":

1. In many cases, it is not uniquely possible to differentiate between a type of machine and a particular proprietary trade name, confirming the fact that technological innovation seeks to combine elements of different technologies and processes, to overcome the existing limitations. Developments by the various producers led to the creation of **different degrees of hybridisation**, more or less pushed, between the excavation methods;
2. **Overlapping of classical and extended fields of application** by means of ground conditioning: chemistry moves the limits of convenience of using one type of machine rather than another, also depending on the cost and reliability of the treatment result. A large number of research studies have been developed in this field, and they are discussed in Section 6;
3. **Muck management combination**: once univocally linked to the way of managing counter pressure at the front, the choice nowadays can be determined by other factors and can be combined in a new way. Muck management via fluid transport (suspension in a slurry medium) ca be useful for environmental reasons as discussed in Chapter 5 of Volume 1 (e.g., due to the presence of asbestos in the ground, or regulations at landfill disposal), even in the presence of non-granular soils;
4. **Management of the pressures at the face**: the existence of the VD excavation mode already disrupts today's classifications, as it combines counterpressure, evacuation and fluid/solid transport systems of different types of soil machines, being also capable of switching from one system to another without major intervention on demand.

In a certain sense, we are witnessing an extension to the global concept of the soil TBM itself and the configuration of a "modern" ground machine is less and less characterised by the "classic" EPB vs Slurry type duality, but more and more by a **nuanced transition of technical-design solutions** included in a large pool of possibilities, which are categorised in Chapter 3.

2.6.3 Features of the new soil machines "on demand"

The catalogue of the characteristics of the soil TBMs that are proposed and requested in the market is by now very broad and with multiple measures and can be listed through a subdivision into the various elements of the excavation management. In each area, each supplier offers different systems, characteristics and technologies that can substantially modify the response to excavation of machines of a similar type, as well as combine in a significantly different TBM configuration.

T&F Proofs – Not for Distribution

As a result, specification parameters that are usually defined in the design phase of a ground TBM are more and more open to being defined by the need of the projects, combining the risk approach constraints, as discussed in Volume 1 of the book and shown in Figure 2.106, with indications for each of them for reference (Figures 2.107–2.110).

General description	Element	Specification parameters
1. Cutterhead characteristics	Opening ratio and Max. opening in the Cutterhead	O.R. can vary widely depending on ground characteristics Maximum opening can vary widely depending on ground characteristics
	Presence of crusher or other removal/destruction for boulders	Stone crusher High-pressure jet nozzles Protection bars
	Access to the cutterhead and its elements	Acess for tool changing Men airlock nominal pressure Number of people (main chamber and secondary chamber) Material airlock Samples collection via airlock
	Anti-wear design features (cutterhead, tools, wear detection elements)	Anti-wear plates on the excavation face Anti.wear plates in the rear face of the cutterhead Anti-wear sensors in the excavation fase and/or on the peripherical tools High-pressure jet nozzles Excavation chamber CCTV Esperimental robotic arms for repair operations
	Type and number of excavation tools	Cutters diameter (15″, 17″, 19″) Number of Cutters Scrapers/rippers type Number of Scrapers/rippers Number of center Twin-Disc Cutters
	Type and number of overexcavation tools	Copy-cutter/extensible ripper number and technology Copy-cutter/extensible ripper stroke
	Ground treatment characteristics	Foam injection nozzles (number and max. pressure) Polymer injection nozzles (number and max. pressure) Water injection nozzles (number and max. pressure) Bentonite injection lines (number and max. pressure) Filler injection lines
	Head retraction system	Maximum retraction stroke
	Gas detection & proofness	Type of monitoring sensors (portable, fixed) Type of Gas detected Gas detectors in cutterhead Anti-deflagrant measures for explosive athmospheres in cutterhead

Figure 2.106 Main features and technical specifications for actual soil machines – cutterhead characteristics.

Taylor & Francis Distribution

General description	Element	Specification parameters
2. Shield characteristics	Main bearing sealing pressure	Pressures up to 5-6 bar widely available also for EPB Pressures up to 15 bar for SPB Possibility for sealing repair/replacement in the tunnel/in shaft
	Advance rate and Rotation speed	Cutterhead rotation system (electric, hydraulic). Variable frequency convertors for rotation speed fine control (electric motors) Advance rate (up to 80 mm/min considered usual, above 100mm/min is in the upper limit) Specifications linking hydraulics circuit, muck evacuation, ground treatment systems for max AR
	Thrust force	Nominal Thrust Exceptional Thrust Number and positions of cylinders and thrust pads Thrust cylinders maximum eccentricity
	Torque of the cutterhead	Nominal Torque Breakout Torque Torque at max speed
	Tail shield sealing	Maximum Grout & groundwater pressure Number of brushes rows (3: usual, 4: specific cond., >4: exceptional) Number and pressure of seal grease injection lines Emergency sealing systems Possibility of repairs/replacement during excavation drive Clearance from ring during erection
	Articulation system	Articulation Type (Active, Passive) Maximum Articulation Thrust&Pull
	Segment erection	Type of erector Safety devices during erection Freedom degrees Ring assembly mechanical minimum time

Figure 2.107 Main features and technical specifications for actual soil machines – shield characteristics.

The contemporary soil TBM specification process is therefore less of the selection of a « pre-defined » set of characteristics given by traditional Earth- or slurry-based machines, and more of a selection of characteristics and ranges inside a continuously increasing list of possible features. Nowadays, tender procedures require more and more a contractor's proposal to show how and why specific features are selected, and which added value they provide to the project, being matched with the risk mitigation approach and its budgetary implications (Figure 2.111).

Therefore, each TBM, starting from a basic set of common features, will show a specific result based on the selection of some **Regular features** (the ones that are frequently or almost always offered along a "typical" EPB or SPB machine), some less basic **Additional Features** (the ones that can be added but whose presence imply an additional cost or significative changes in design of selected parts of the machine), or some very **special features/measures** (features that imply an important re-engineering

T&F Proofs

General description	Element	Specification parameters
3. **Muck removal characteristics**	Muck removal system	Screw conveyor+belt Screw conveyor + slurryfier box Slurry system + Slurry Treatment plant Double screw conveyor
	Muck removal rate	Extraction rate Anticlogging systems Control of "plug" gradient Precision of flow rate & density measurement Precision of volume/weight measurement,
	Muck treatment	Bentonite injection in the screw Water injection Slurry/Bentonite additioning
	Screw Conveyor	Screw Conveyor Rotation speed Screw Conveyor Torque Screw Conveyor Power Screw Conveyor Stroke Screw Conveyor guillotine (single or double) Screw Conveyor inspections points (number & dimensions)
	Mucking pipes	Lenght of extension between reel retraction Number and dimensions

Figure 2.108 Main features and technical specifications for actual soil machines – muck removal characteristics.

General description	Element	Specification parameters
4. **Grouting Systems**	Grouting system	Mortar grout Bi-component grout
	Grouting injection capacity	Number of injection lines Total or component capacity Max injection pressure Pump type Pump power installed
	Grouting tank capacity	Number of tanks Total capacity Transfer flow Tank trasfer system

Figure 2.109 Main features and technical specifications for actual soil machines – grouting systems characteristics.

of functioning principles of the machine, with a significative increase in cost and/or procurement process, but nevertheless provide significantly different possibilities and characteristics to the process).

An example of selected features for EPB, slurry type is provided in the following, and a focus on the most common type of Hybrid machine, i.e., the VD, is provided too (Figures 2.112–2.114).

T&F Proof Not for Distribution

General description	Element	Specification parameters
5. Probing systems	Drilling at the face	Number of drilling ports Dimension of drilling ports Probing possibility
	Drilling around the shield	Number of drilling ports Dimension of drilling ports Probing possibility
	Non conventional probing/investigation systems	TRT BEAM etc.

Figure 2.110 Main features and technical specifications for actual soil machines – probing systems characteristics.

General description	Element	Specification parameters
6. Service & Logistics	Guidance system	Guidance system Frequency Data monitoring system Integrated ring-assembly software
	Backup gantries	Boogie-wheeled, rail-wheeled Maximum lenght of total back-up Number of gantries Lenght of cable reel, water reel, sewage reel, ventilation cassette
	Segment handling	Number of segments available Quick-unloading systems Invert segment handling/installation system
	Shift and work facilities	Rescue chambers Controlled athmosphere cabin Hyperbaric rescue rooms TLC&CCTV systems Ventilation & AC systems Emergency lights systems Wifi, fiber, GPS, TLC Canteen First Aid room Pilot cabin facilities Toilets
	Gas detection & proofness	Type of monitoring sensors (portable, fixed) Type of Gas detected Gas detectors in backup Anti-deflagrant measures for explosive athmospheres in backup Fire estinguishing system Fire curtain available

Figure 2.111 Main features and technical specifications for actual soil machines – service and logistics characteristics.

Taylor & Francis Distribution



Figure 2.112 Regular, additional and special features for actual Earth Pressure Balance TBMs. (Courtesy of Geodata.)

2.6.4 How to define the specifications for the required machine?

In the light of what is described in the previous paragraph, the simple nomenclature of a type of machine is less and less able to provide a clear indication of the greater or lesser adaptation of a given machine to a specific project.

T&F

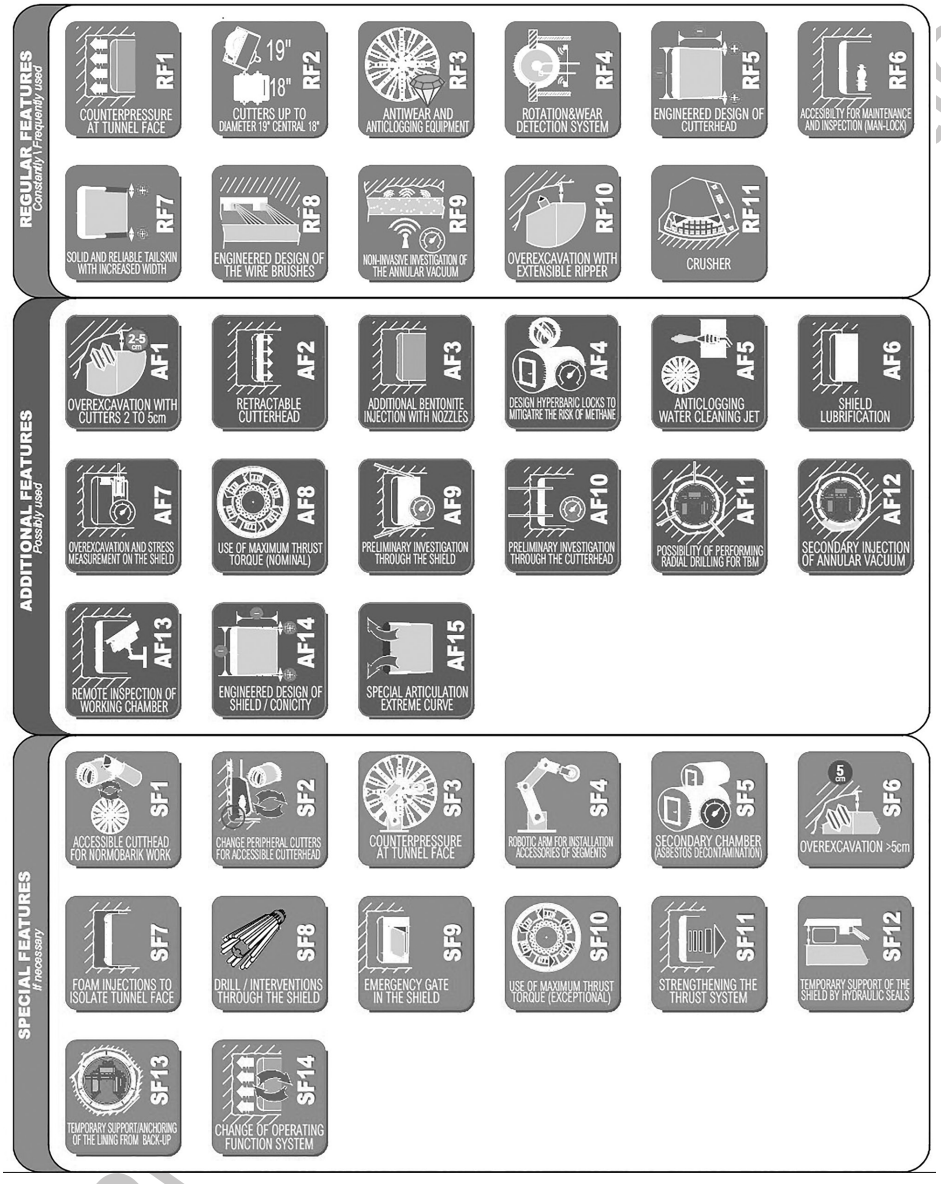

Figure 2.113 Regular, additional and special features for actual slurry type machines.

To specify, evaluate and select the most valuable configuration for a given project, rigorously and with a traceable decision-making process and based on a well-developed risk analysis, is where the current trend has placed the burden for owners, designer and buyers.

In the past, at the level of Design and Technical Specifications Definition of the machines to be used, designers generally proceeded to evaluate, based on the

T&F Proof

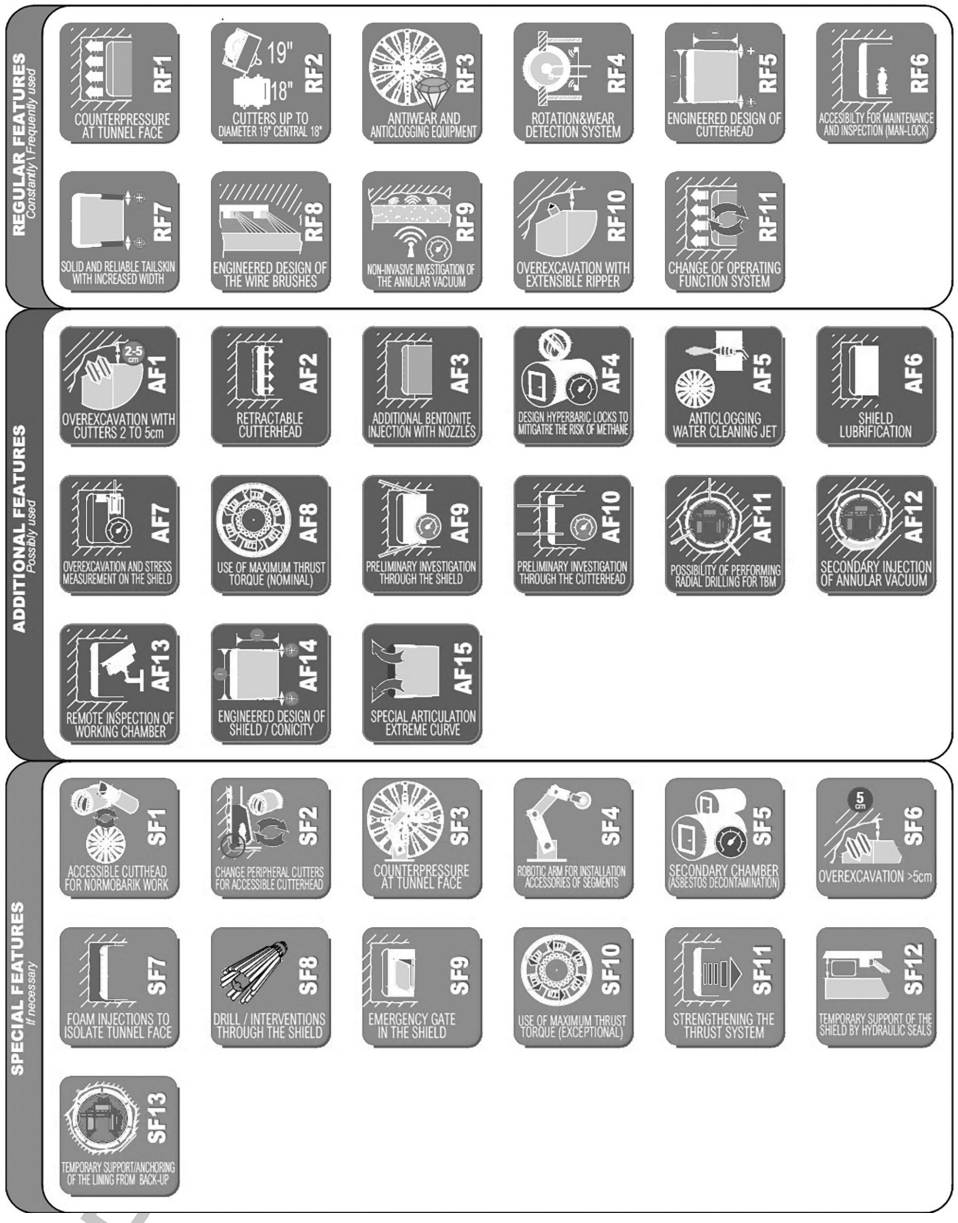

Figure 2.114 Regular, additional and special features for actual variable density machines.

granulometric curves of the soil to be excavated, which type of ground machine according to their typical field of application, was more similar to the geotechnical baseline ground conditions, including additional considerations regarding maximum values of confinement pressures that could exclude one type of machine with respect to the other.

T&F

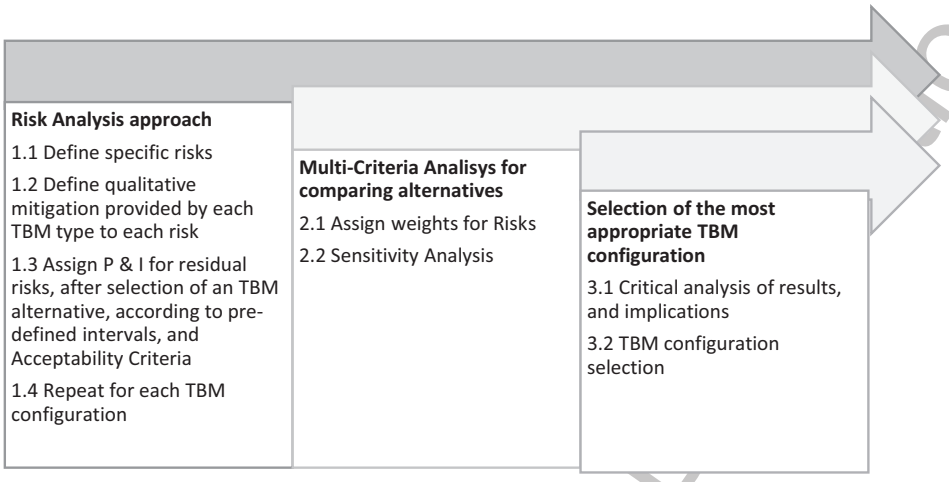

Figure 2.115 Evaluation method RAMCAST risk analysis driven approach based on multi criteria analysis for selection of TBM configuration.

A limitation of this approach derives from the fact that the number of grain size tests and characterisations is often limited, that different conditions often exist along tunnel alignment, and that moreover not all grain size curves encountered in a same alignment or even in a same stretch of excavation generally fall within the same field of application. In this very frequent situation, the question often arises is to what extent the presence of grain size curves outside the "classic" or "extended" field of application makes a certain choice acceptable or makes sense at all. Often the answer is of the "it depends" type: it depends on the risk of surface subsidence that could derive from a sudden loss of confinement pressure at the face, or it depends on the downtime that would result from blocking the excavation head for a given event, it depends on the cost and the limitation in muck disposal that derive from having to treat soil with excessive presence of fines in an STP, it depends on the impact (in terms of safety, environmental, contractual and/or impact social) of a superficial blow-out in a critical infrastructure above the excavation, etc. In sum, it depends on an assessment in terms of risks, probability of occurrence, impact (economic, duration, social, contractual and environmental), and effectiveness of the selected machines as the main mitigation measure for the wider number of risks.

Furthermore, the appearance of new types of machines has expanded the range of combinations, as well as the possible inclusion on request of additional elements, or hybrids, to the design of a specific machine, which adds a greater number of variables to be evaluated.

To provide an engineering tool to the above problems, a Risk Analysis-driven approach based on Multi-Criteria Analysis can be applied for selection of TBM configuration. An approach of this type is presented in the following section.

The approach is based on a three-step process (Figure 2.115).

The first step is a complete risk management of the tunnel (Figure 2.116–2.118).

T&F Proofs – Not for Distribution

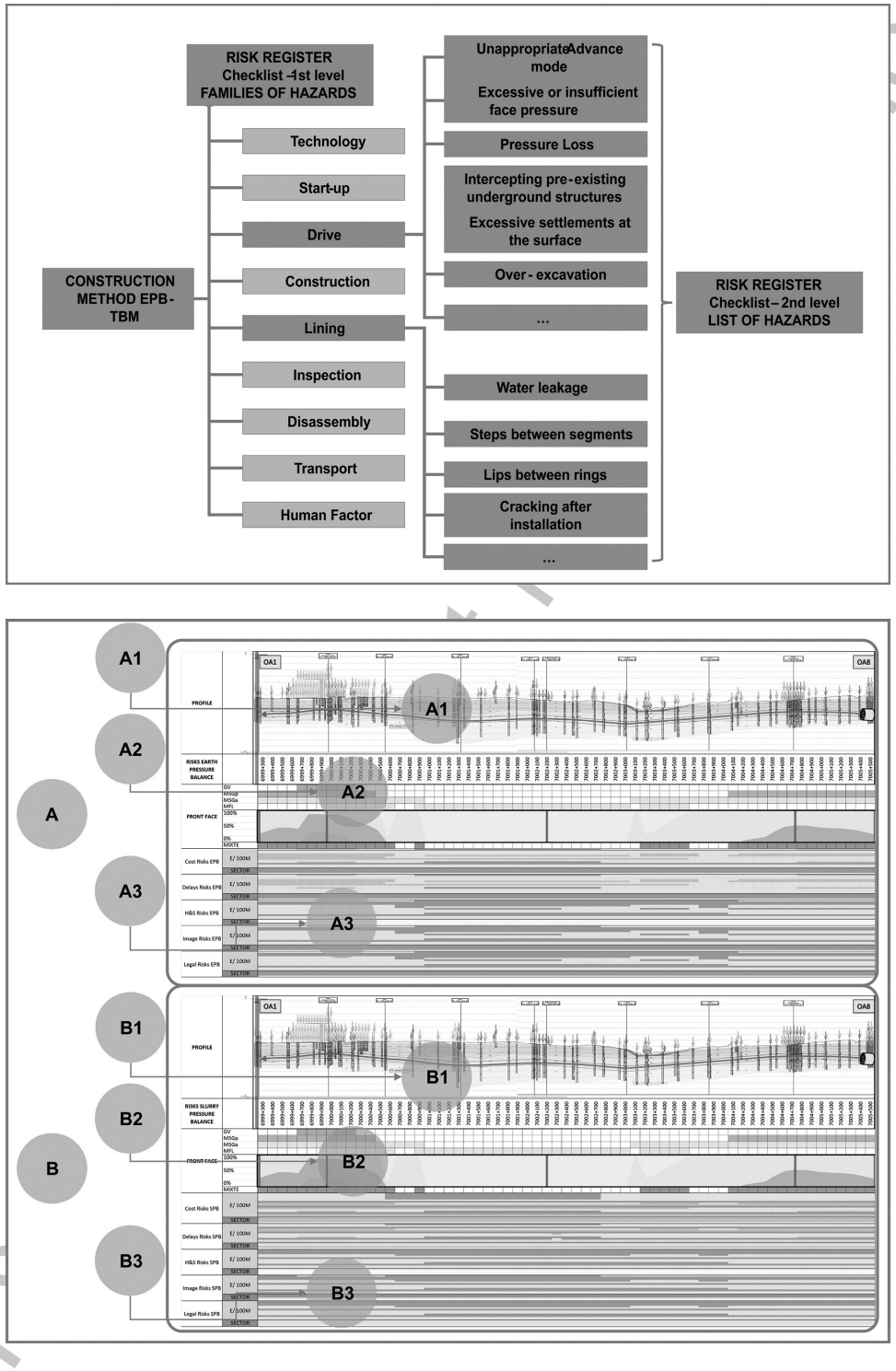

Figure 2.116 Evaluation method RAMCAST - Step 1: Risk analysis stage. (Courtesy of Geodata.)

9781032307473_C002.indd 151 02/06/22 8:22 PM

FAMILY i	Pi	ID	SUB-FAMILY j	Pj	Ptot ij
SETTLEMENTS CONTROL	25%	R-01	Difficulty controlling settlements leads to excessive settlements	50%	13%
		R-09	Difficulty in front control during prolonged stoppages causes settlements and extra maintenance	50%	13%
			Sub-Family total	100%	
MUCK MANAGEMENT	25%	R-11	Contaminated soil requires special treatment	50%	13%
		R-12	Disposal of muck requires special treatment	50%	13%
			Sub-Family total	100%	
OPERATION AND MAINTENANCE	25%	R-02	High hydrostatic pressure exceeds the application field of the	5%	1%
		R-03	Presence of boulders causes extra maintenance	15%	4%
		R-04	Presence of mixed rock/soil front causes extra maintenance	15%	4%
		R-05	High presence of fines causes clogging	20%	5%
		R-06	Presence of granular soils makes it difficult to control pressures	20%	5%
		R-07	High hardness/abrasiveness reduces advance rates and increases costs	10%	3%
		R-08	Difficult access to the excavation chamber in case of necessity causes extra maintenance	5%	1%
		R-10	Soil with presence of gas causes work stoppages	10%	3%
			Sub-Family total	100%	
OTHER FACTORS (INSTALLATION, INSTALLATION SIZE, ETC.)	25%	R-13	Complexity of installation requires extra costs	33%	8%
		R-14	Complexity of operation requires extra costs	33%	8%
		R-15	Size of jobsite installation is larger	33%	8%
		~~R-16~~	~~Capital investment is larger~~	~~0%~~	~~0%~~
			Sub-Family total	100%	
Total Families	100%		Total		100%

Figure 2.117 Evaluation method RAMCAST - Step 2: Multi criteria analysis stage. (Courtesy of Geodata.)

2.6.5 Soil conditioning and backfilling

Soil conditioning and backfilling are two operations of paramount importance in the mechanised excavation process performed by shielded machines as already discussed in Chapters 8 and 10 of Volume 1 of the book and in this chapter. Due to the large amount of scientific material available on these topics, in this paragraph, the key information has been reported and scientific references have been added in order to give the possibility for interested readers to go deeper in these arguments.

T&F Proofs

	Criticality Matrix EPB Option	Assessment	Criticality Matrix SPB Option
COSTS	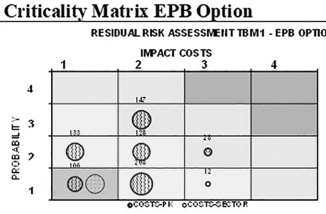	SPB: Less risk of impact 2, but higher risk in case of polluted land or muck treatment. In addition, risks of a global nature (complexity of the general installation, capital investment) in the "red" zone, the probability being probable to highly probable, and the impact possibly being strong on the section, i.e. say potentially higher than 5M€.	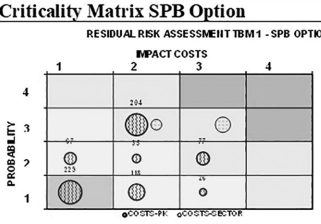
DELAYS	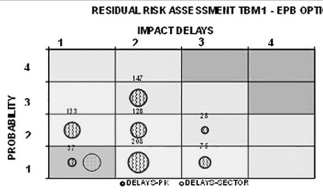	EPB: risks for pressure control in granular soils (SB), about 600m. SPB: risk of clogging in the first 400m	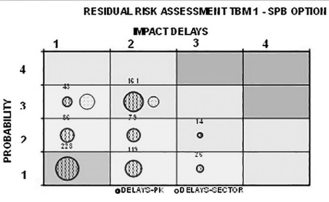
H&S	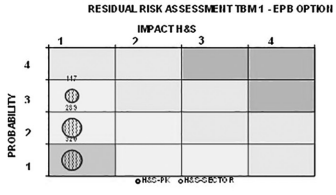	Both options are very similar from a H&S risk perspective.	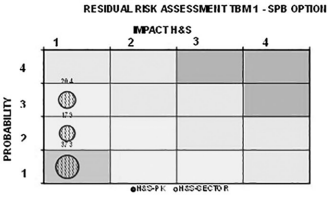
IMAGE	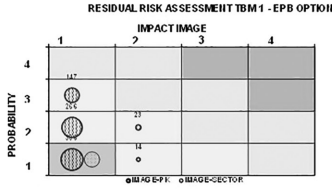	The two options are very similar from an Image impact perspective. Larger footprints penalize the SPB option.	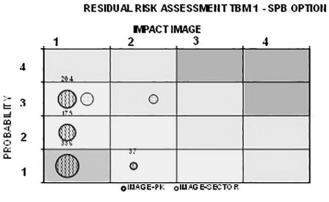
LEGAL/CONTRACTUAL	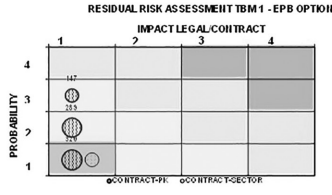	The two options are very similar from a legal / contractual point of view..	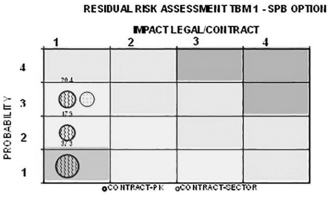

Figure 2.118 Evaluation method RAMCAST - Step 3: Selection of the TBM stage. (Courtesy of Geodata.)

(*Continued*)

T&F

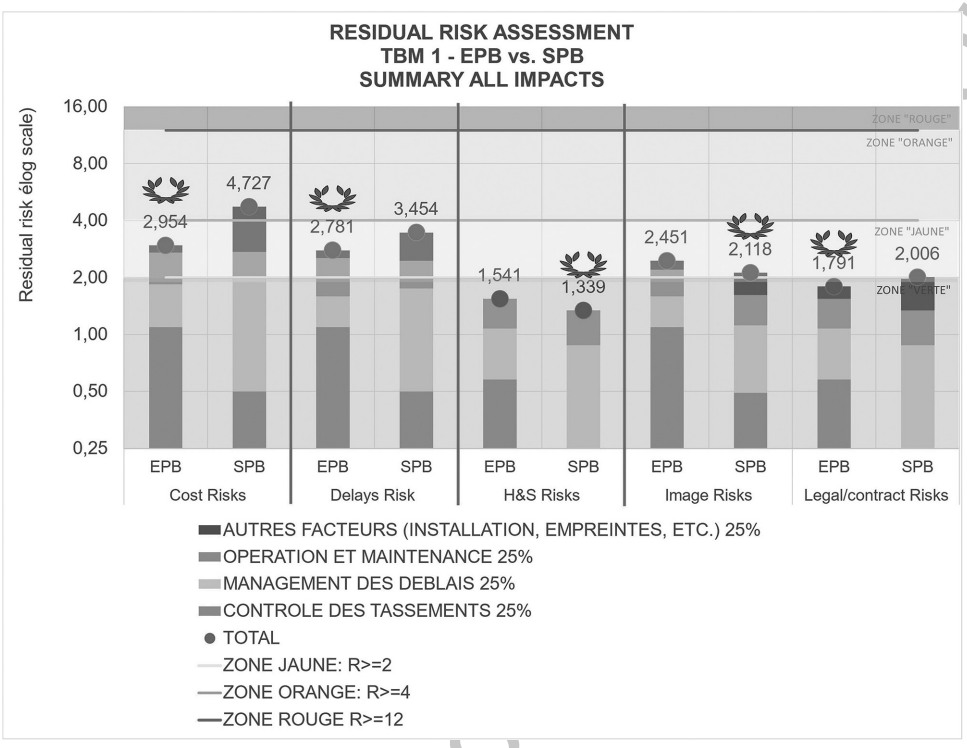

Figure 2.118 (Continued) Evaluation method RAMCAST - Step 3: Selection of the TBM stage. (Courtesy of Geodata.)

2.6.5.1 Soil conditioning

The aim of soil conditioning is to modify the properties of the excavated soil or rock to obtain a material suitable for the EPB-TBM process that is to say:

- to apply a homogeneous pressure on the tunnel face;
- to prevent or minimise the water inflows inside the excavation chamber;
- to regularly flow from the opening of the cutterhead, inside the excavation chamber in order to reach the screw conveyor and to be transported by the screw conveyor itself. Moreover, it should have a consistency that allows be easily transported by the belt conveyor;
- to have a consistency and mechanical behaviour that allows an easy management on the job site for transportation at the final disposal;
- to allow to create a plug in the screw conveyor to manage the pressure in the chamber;
- to reduce the wear phenomenon of the soil on the metallic part of the machine;
- to prevent or minimise the clogging phenomenon, in the case of a clayey material, both ahead the cutterhead and inside the chamber.

T&F Proofs – Not for Distribution

Considering the abovementioned properties, the phenomena under the conditioning effect are diversified and many different conditioning agents can be mixed to the soil to get the needed properties:

- *Water*: excluding construction sites located in particular geographic areas, the water is the cheapest conditioning agent, frequently used, mainly in clayey soils;
- *Foam*: is the main used conditioning agent. It is produced by the foam generators located in the machine, starting from a commercial foaming agent (commonly a solution of surfactant/surfactants). The generator liquid is created by mixing the foaming agent and the water, whereupon the air is added with a turbulent process, obtaining the foam. Many different products are available on the marked and their properties depend on the used chemical raw ingredients. More details on the environmental aspects are discussed in Chapter 5 of Volume 1. Typically, the foam is volumetrically composed of a foaming agent mixed with water to a concentration ranging from 0.5% to 5% depending on the type of product, water up to 5%–10% of the volume and air. The standard test to check the foam stability is the half-life time test that identifies the time spent by a certain amount of foam (80 g) to drain 50% of the weight of the initial generator liquid (EFNARC, 2005; Sebastiani et al., 2019). The parameters that describe the soil conditioning with foam are reported in Table 2.18. Concerning Foam Expansion Ratio (FER), it can be defined as a "quality index" of the foam. Low values describe a wet foam and are typically adopted in clayey soil while high FER values (ranging between 12 and 20) values are related to a dry foam, commonly used for sand and gravel;

Table 2.18 Parameters for the conditioning management

Parameter	*Common abbreviation*	*Equation*	*Range*
Added water	w_{add}	$w_{add} = \frac{\text{Added water weight}}{\text{Dry soil weight}} \times 100$	*Till the atterberg liquid limit*
Generator liquid concentration	C	$c = \frac{\text{Foaming agent volume}}{\text{Generator liquid volume}} \times 100$	0.5–3
Foam expansion ratio	FER	$\text{FER} = \frac{\text{Foam volume}}{\text{Generator liquid volume}}$	6–25
Foam injection ratio	FIR	$\text{FIR} = \frac{\text{Foam volume}}{\text{Soil volume}} \times 100$	10–120
Polymer injection ratio	PIR	PIR = (Polymer volume/soil volume) × 100 (see note)	/

Note: The PIR is not univocally described. Often it is expressed as PIR = (polymer volume/soil volume) × 100 but, due to the very small amount usually used, it is also common to find expression as PIR = (polymeric solution volume/soil volume) × 100, where the polymeric solution concentration is reported separately. Rarely, the PIR could be also expressed as weigh percentage. The range related to polymers is wide and strictly connected to the specific purpose of use and to the specific commercial product.

T&F Proofs – Not for Distribution

- *Aggregating polymers*: they are used for increasing the consistency of the soil in the case of lack of fine in the medium intended to be excavated;
- *Absorbing polymers*: they are used in the case of water overabundance. The water is caught in the polymers structure;
- *Dispersant/anti-clogging polymers*: they are used with clayey soils, act on the electric potential of the clay particles avoiding the compaction and the clogging phenomenon, permitting the normal excavation process;
- *Anti-wear polymers*: they are used with high-wear soil (with a high quartz percentage). These polymers create a layer on the excavated particles permitting the friction reduction between the soil and the metallic parts of the machine;
- *Bentonite slurry and fillers*: as for the aggregating polymers, they constitute an alternative in the case of a material devoid of fine. It should be signalled that in order to inject the bentonite slurry (with the better density for the purpose) or the fillers, special equipment are commonly required.

The conditioning process, that is to say the mixing of the soil with the conditioning products, can be carried out injecting into the soil the conditioning agents in three different positions of the EPB-TBM: ahead the cutter head, inside the excavation chamber and along the screw conveyor. The conditioning ahead the cutter head is always carried out while the conditioning in the excavation chamber and along the screw conveyor are performed only in specific conditions. In general, specific nozzles and their geometric patterns are defined in the early stages of machine design according to the preliminary available information concerning the geology of the tunnel route. Their geometric location should allow to homogeneously condition the excavated soil.

Regarding the mechanical properties of the support medium, the key issues are the flow behaviour (that is directly linked with the consistency of the muck), its homogeneity and shear strength, the hydraulic conductivity of the muck, the stability of the material, its abrasiveness, the eventual tendency to clogging and the speed of recovery the original properties for management of the disposals (Galli & Thewes, 2014). These parameters are today mainly defined and assessed at the design stage, with laboratory tests.

The appropriate flow behaviour is usually assessed using the workability of the mix derived from the concrete technology for the cohesionless soils. A large number of research studies (Peron & Marcheselli, 1994; Quebaud et al., 1998; Peila et al., 2009, 2013, 2019; Borio & Peila, 2011; Thewes et al., 2012; Galli & Thewes, 2019) have been developed on this topic, and various authors describe a range of the slump between 10 and 20 cm are an acceptable range. It is anyway generally accepted that a simple measurement of the drop of the slump is not enough for a proper assessment, since a suitable flow behaviour depends also by the observation of the quality of the mix and its homogeneity. Therefore, many authors have proposed evaluation charts as the one reported in Figure 2.119 (Martinelli et al., 2018). Specifically, the conditioned bulk should not present fractures or loose cobbles, it should exhibit a pulpy behaviour, it should flow done homogeneity when a vibration is induced. Furthermore, the release of fluid from the conditioned bulk should not be present; this last assessment can be simply performed by checking the presence of released liquid at the contact surface bulk/steel plate.

T&F Proofs – Not for Distribution

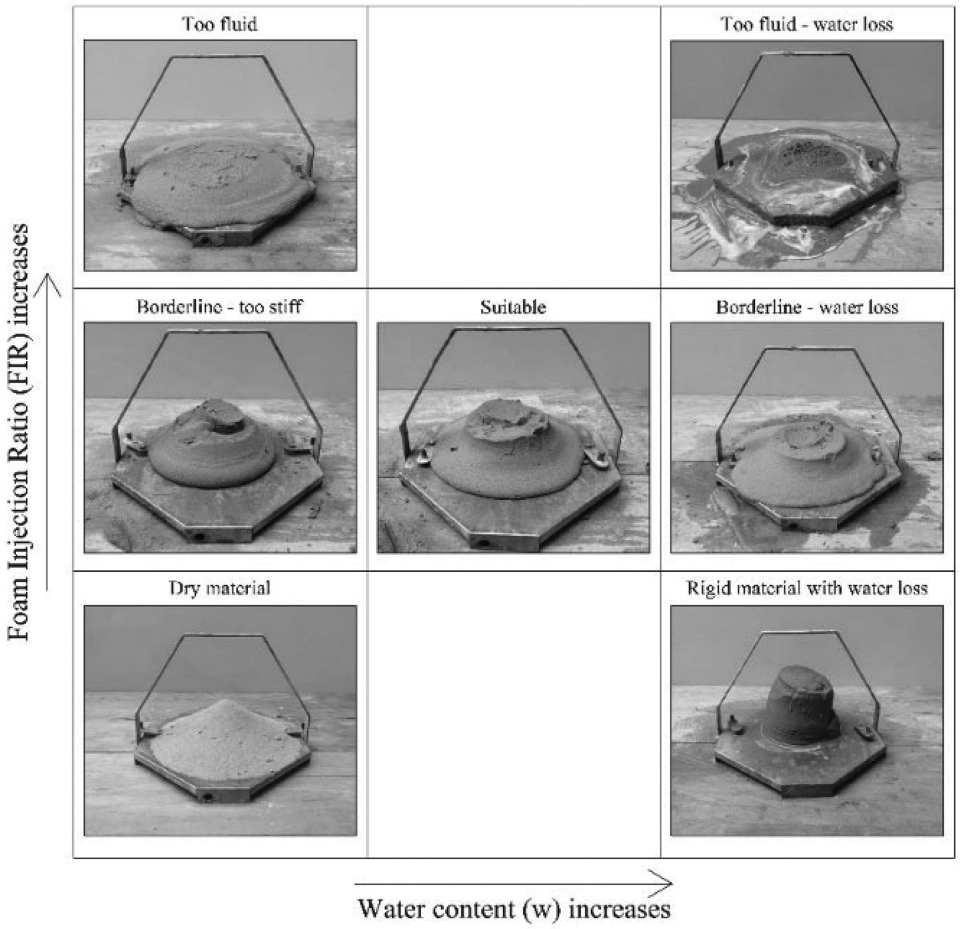

Figure 2.119 Slump evaluation in function of the FIR and the water content (Martinelli et al., 2018).

Regarding the flow behaviour of the mix, an efficient test has been proposed by Vinai et al. (2008) who used a screw conveyor test form a pressure chamber in a way to get a more complete analysis regarding the ability of the material to properly flow. This or a similar test (Merrit & Mair, 2006; Rivas et al., 2009) should be applied mainly when the soil is homogeneous or when the stability of the foam could be affected by the soil itself. Studies on the effect of pressure on the flow behaviour of the conditioned soil have been developed by many authors among which the works of Mori et al. (2018), Martinelli et al. (2019), Wu et al. (2020) and Wang et al. (2021) are noteworthy, however a standardised and universally recognised test is not available. Recent works also interpreted the results on the basis of the natural soil void index assessed on the natural soil and on the conditioned one with good results, anyway the assessment and the following interpretation of the void index is not yet a common practice in the conditioning design procedures. As concerns the hydraulic conductivity, Abe and Uehara

T&F Proofs

stated that, particularly in coarse grained soil, values have to be $<10^{-5}$m/s in order to avoid or significantly reduce the destabilising forces at the face of the machine. More details concerning on the permeability tests on the conditioned soil can be found in Borio and Peila (2010), Budach and Thewes (2015), Todaro (2016).

When considering cohesive soil, the definition of the flowability is more complex then granular non-cohesive soil: Maidl (1995), Thewes and Budach, (2010) and Zizka and Thewes (2016) indicated that for a proper flow behaviour the conditioned clay should have a I_c (consistency index) ranging between 0.40 and 0.75. Furthermore, fine-grained soils and clays often pose problems of clogging, adhesion and re-aggregation. Clogging occurs when the cutterhead openings are plugged while adhesion occurs when the steel large surfaces of the machine are covered by the excavated material; the re-aggregation phenomenon happens when the excavated clay creates a new compact mass inside the bulk chamber (Hollmann & Thewes, 2012; Zumsteg et al., 2013a,b). These phenomena can induce a reduction of the excavation speed, an increase in the required cutterhead torque and sometimes they can lead to the complete blockage of the screw conveyor or of the cutterhead. The assessment of the clogging potential at the design stage is crucial and it is commonly carried out using the standard clay geotechnical indexes (i.e., the water content, the plasticity index and the consistency index) as clearly discussed by Thewes (1999) and Hollmann and Thewes (2012, 2013). The research carried out by these authors can be summarised in Figure 2.120: Five different areas characterised by different clogging potentials are recognised in function of the clay geotechnical indexes.

Therefore, in the design procedure of the proper conditioning, it is required that a good balance between a proper consistency index and the clogging behaviour must be

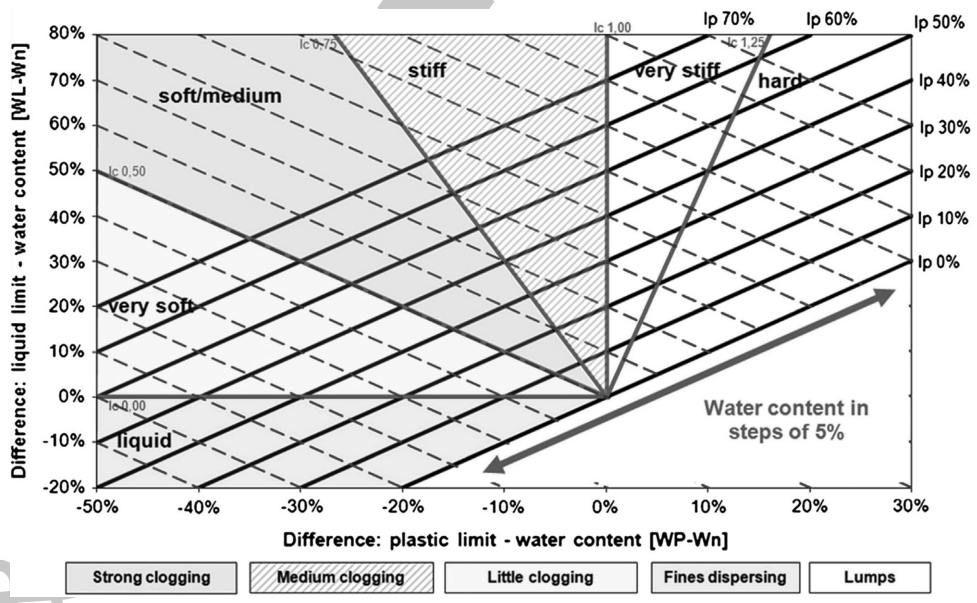

Figure 2.120 Classification diagram for clogging potential of a clay proposed by Hollmann and Thewes (2013).

T&F Not for Distribution

achieved. The suitable conditioning parameters can be obtained with tests that must be carefully studied and the simple definition of consistency index can lead to incorrect interpretations of the results.

The most frequently used clay conditioning agents are foaming agents and water that, when injected, produce a soft mud that allows the mutual sliding of the clumps thus minimising the risk of re-aggregation. Since foam has a limited effect on clogging and adhesion (Zumsteg et al., 2013b), it is usually combined with polymers able to lubricate the clay and to minimise its stickiness (Langmaack & Feng, 2005; Peila et al., 2016).

As reported, the issue of the clay conditioning is complex, and currently available studies have been performed by using powdered clay samples mixed with water and conditioning agent. The use of a clay powder is acceptable to study small-scale adhesion and flow behaviour, but it is not suitable to correctly predict the EPB tunnelling process at real scale. To overcome this lack, it is also necessary to consider samples made of chips with bigger size as discussed by Peila et al. (2016). A very good representation of the development of water balance in clay and the link with its behaviour is presented in the paper by Galli and Thewes (2014) and summarised in Figure 2.121. In this scheme, the authors put alight also the crucial role of the time: it plays a key role in the conditioning process and the behaviour of the chips is mainly controlled by the peripherical parts of the clay where a soft and wet clay (created due to the hydration process) is present while the central part of the chips has the natural water content. Various researchers have developed different testing methods in order to evaluate the conditioned clay behaviour with reference to EPB tunnelling in clay and in the following a short presentation of this topic is provided. The slump test can be used but must be integrated with further testing. It gives a global overview of the

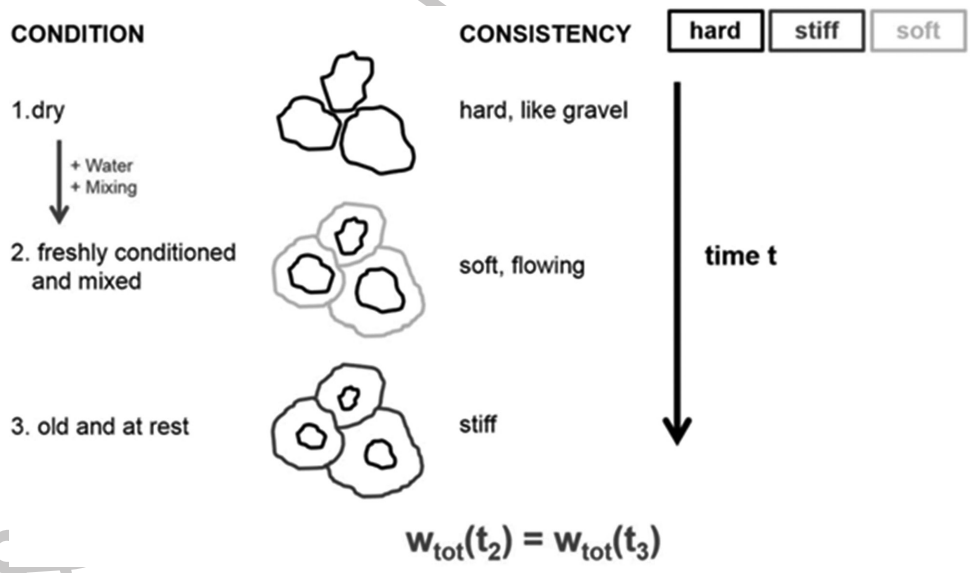

Figure 2.121 Development of water balance in a clay conditioned soil (Galli & Thewes, 2014).

Not for Distribution
T&F

mass behaviour (particularly when chips are used as sample) but it does not provide sufficient indications on the clogging and adhesion phenomena. The tests most frequently proposed for clay are addressed to evaluate the behaviour of a powdered clay paste conditioned or not conditioned when it is in contact with steel. This mixing test was originally used by Psomas (2001), Zumsteg and Puzrin (2012), and Zumsteg et al. (2013a,b) who used a Hobart mortar mixer. Recently, Garroux de Oliveira et al. (2018a,b) proposed an updated procedure where an assessment of the clogging potential was defined by mixing the clay with a Hobart mixer and weighing the mass of material stuck on the beater, comparing this with the whole amount of mixed material. These authors improved the way used to detach the clay from the beater by dropping it from a fixed height. The lateral adhesion test (adhesion associated with sliding, carried out with different schemes by various researchers) was used to measure the adhesion between the conditioned soil and a metallic element (Quebaud et al., 1998; Zimnik et al., 2000; Peila et al., 2016). The adhesion test, carried out using a steel cylinder placed upon the soil sample and then pulled up while measuring the adhesion force, was introduced by Thewes (1999), Thewes and Burger (2005) and Sass and Burbaum (2009); while Feinendegen et al. proposed to use the cone pull-out test. Zumsteg et al. (2013a,b) and Peila et al. (2016) developed testing devices to evaluate the shear resistance on a metallic disc rotating in the conditioned soil at different pressures and at different speeds.

The conditioned soil must provide a sufficient stability above all during the stoppages. This is particularly important when additives like foam are used since it has a temporary and highly changeable stability. When the foam decomposes, there is a concrete risk of separation in the excavation chamber between different phases. In other words, the creation of an air bubble on the crown could occurs, affecting the face stability management. For this reason, an air release valve is frequently installed on the machine and this is a standard in large size machines. The potential segregation of the liquid from the conditioned bulk it has experimentally proved: a good slump performed quite instantaneously after the conditioning not always saves its properties after a certain time lap. Consequently, recent laboratory evidences are leading the researchers to complete the assessment of the conditioning repeating the slump test, by using the same material, after it has been to rest for a certain time. More details concerning these tests can be found in Peila et al. (2013). Finally, the speed of degradation of the foam and the time the soil recovers its geotechnical properties are important factors that are to be assessed for the muck disposal and this aspect must be tested in laboratory for a complete assessment of the conditioned soil (Carigi et al., 2020).

The wear of the soil on the mechanical part of the machines is complex since it depends by many factors and can affect different parts of the EPB-TBM. Not only the tools are affected by this phenomenon but also the cutterhead structure and the screw conveyor are affected by the wear. When the geology surveys put alight high quartz presence in the soil, it could be useful to make a check on the wear potential of the conditioned soil. Various authors developed different equipment to evaluate the abrasion induced by the excavated soil on the metallic part of the machine. Generally, it can be stated that a good conditioning obtained with the right water content, the suitable foam in terms of quality and quantity anti-wear polymers (if permitted by environmental protocols) can strongly decrease the wear phenomenon even if no relationship

T&F Proofs – Not for Distribution

able to make a quantitative evaluation is nowadays available. More details concerning these tests can be found in Nielsen et al., Gharahbagh et al. (2014), Rostami et al. (2012) and Oñate Salazar et al. (2016, 2018).

As already stated, conditioning must be defined case by case with reference to the composition and quality of the soil.

2.6.5.2 Backfilling grouting

The backfilling operation concerns all shielded machine types (both for rock and for soil) and is related to the filling of the gap between the segment lining and the ground. It is performed close to the shield tail. The gap that is created during the machine advancement between the rings extrados and the excavated ground profile cannot be physically avoided since the segment lining ring is assembled under the shield protection. The size of this gap has order of magnitude of centimetres (Figure 2.122) and depends by:

- the shield conicity (the difference of dimension between the first circular section of the shield, close to the head and the last one located in correspondence of the tail, needed to limit the risk that the machine is stuck due to ground convergence);
- the overcut or over-excavation (the cutterhead with its tools excavate a diameter larger than the diameter of the shield again to contribute to prevent the risk of blockage of the shield due to the convergence of the ground);
- the shield thickness (depending of the machine diameter, commonly some centimetres);
- the tail brush thickness.

This gap is created irrespective of excavating in soil or in rock masses and backfilling phase is an essential operation. In detail, performing correctly the backfilling permits to control ground movements (preventing ground subsidence), to prevent rings movements (locking them in the designed position), to act as the foundation of the whole ring, to increase the waterproofing of the tunnel (preventing localised water

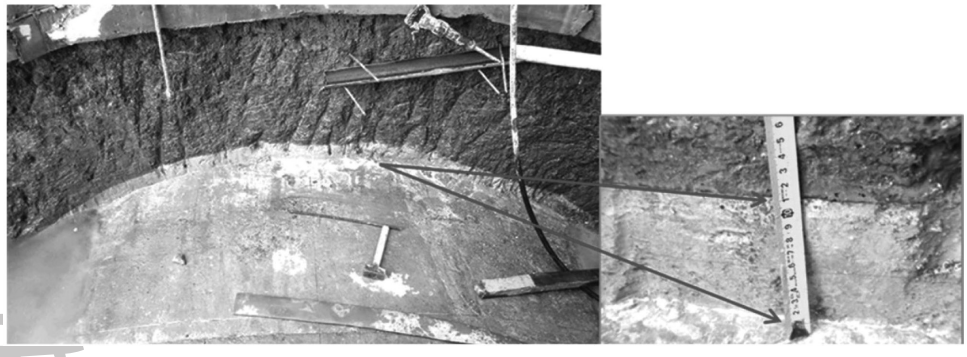

Figure 2.122 View above the tunnel lining, of the annular gap completely filled with hardened two-component grout. Maldonado tunnel. (Courtesy of Mapei SpA.)

T&F proofs – Not for Distribution

circulation around the lining and in the longitudinal direction) and to create an homogeneous area around the ring (minimising potential point loads).

The injection pressure must be sufficient to fill this gap completely and in a homogeneous way however the maximum predetermined pressure should not be exceeded to prevent leakage of the grout through the tail seals of the TBM and/or ground heaving, and therefore the applied injection pressures must be maintained and controlled during the injection process.

The correct design of the backfill grouting pressure is an important design task, and it is specifically designed based on the on the local conditions to be faced. The backfilling grout injection pressure is usually chosen based on the face pressure in EPB or slurry TBM, the overburden load on the crown and the water pressure. The design does not have a standard accepted value, and the proposed range is based on two different approaches:

- to prevent significant flow of the material both from the head toward the tail and/or from the tail towards the head;
- to manage the potential settlements in soil tunnels and inject in regular way the annular gap.

Thewes (2013) starting from the material flow directions that could affect an EPB or a Slurry machine during the excavation process, providing the following criteria for the definition of the injection range: in order to avoid flows from the head backwards into the tail void, the grout pressure should be greater than the face support pressure by a minimum difference of 0.2–0.3 bar ($p_{grout} - p_{face} > 0.2–0.3$ bar) while in order to avoid grout flowing forwards into the excavation chamber, the grout pressure should be less than the face support pressure by a maximum 2–3 bar ($p_{grout} - p_{face} < 2–3$ bar). These ranges are in good agreement with those suggested by BTS (2005) that recommend to use the face pressure applied for the EPB machine plus 0.5 bar and by Boscaro et al. who stated that the injection pressure should be 0.3–0.6 bar greater than the face support pressure, taking care of a further pressure rise of a few decimals of bar at the end of the stroke. With reference to soil tunnels, Wittke et al. (2007) proposed to use a pressure equal to the total overburden stress on the tunnel crown to compensate the potential settlement while Biosca et al. the total overburden plus 0.5–1 bar. Both these proposals, for urban soil tunnels, are in reasonable agreement with the one proposed by BTS (2005) and Boscaro et al. (2015). When working below the water table, Reschke and Noppenberger (2011) suggested to use an injection pressure larger than 1 bar with reference to the groundwater pressure, without exceeding 5.5 MPa. It should finally signalled that for big machines (head diameter higher than 12 m), it is commonly established a differentiation between the backfilling feeding lines in function of the considered injection points (different pressure values can be set up for different areas of the annular gap).

2.6.5.2.1 BACKFILLING METHODS AND MATERIAL

Backfilling grout can be applied using two methods: through nozzles built in the shield tail in a longitudinal way with the immediate filling of the gap or through grout ports

T&F Proofs – Not for Distribution

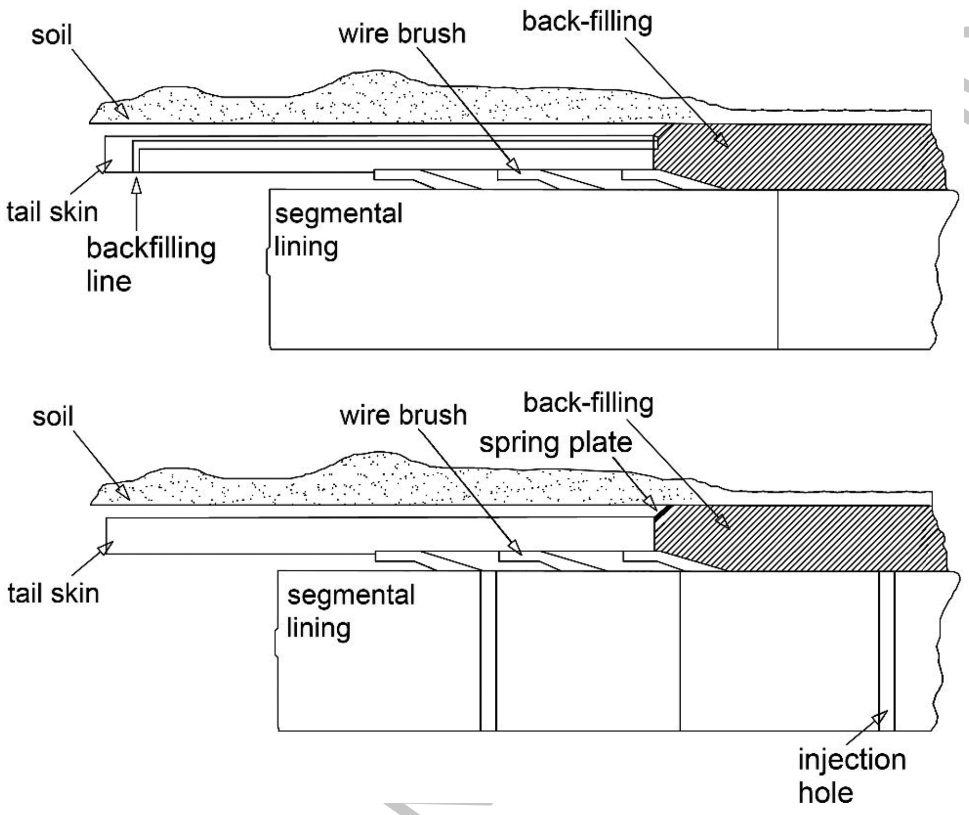

Figure 2.123 Scheme of the shield tail. Longitudinal backfill grouting performed by nozzles (a) and injection through the segments (b).

in the segments (Figure 2.123). Longitudinal backfilling is done using grout ports located in the tail of the shield and the grouting occurs immediately behind the shield to immediately lock in position the ring and it is the common practice when tunnelling in soil. The injection thought the ring requires that the backfilling material is injected at certain distance behind the segments and therefore the annular gap remains unfilled for a certain time and distance from tail shield therefore it is usually applied in rock masses where the problem of settlement is not important. An intermediate situation can be applied in rock mass where the nozzles through the shield are used to immediately fill the lower part of the ring, to prevent its lowering when it exits from the shield and the grouting through the segments is carried out in a second phase, behind the shield in the upper part of the ring. A secondary injection thought the ring can also be carried out to guarantee a sure and complete filling of the gap. In same specific cases (tunnelling in rocks), the secondary backfilling phase can be performed by using draining material (e.g. the pea gravel, discussed in the following). Anyway, it can be stared that the injection through the shield, it is the most used.

Concerning the material suitable for the backfilling, EFNARC (2005) proposed two different classification criteria. The first one, based on the ability of the grout

T&F Proofs

to perform hydration and it foresees three different classes in function of the cement content:

- *Active grout*: the backfill grouting material is made up of water and binder (i.e. Portland cement usually with dosage of 300 kg/m^3);
- *Inert grout*: no cement in the backfilling material (i.e. pea gravel);
- *Semi-inert grout*: the backfilling material is composed of inert ground + water and binder (i.e. Portland cement usually with a dosage less than 100 kg/m^3).

while the second classification, currently the most used in technical literature, based on the number of components:

- mono-component grout (or single-component grout);
- two-component grout.

Adding further details, the pea gravel consists of washed gravel with particles ranged between 8 and 12 mm (Thewes & Budach, 2009), but sometimes sands are used and it can be injected out only via linings (Peila et al., 2011). The pea gravel injection is performed according to the "angle of repose criterion", namely, starting from the lower part of the shield at the bottom, it is drawn a straight line according to the angle of repose typical of the used pea gravel (Figure 2.124). The intersection between this line and the upper part of the ring allow the rough computation of the right distance for performing the backfilling. Sometimes, it is also possible to design a secondary grouting of the pea gravel if the design requires an impervious backfilling.

Pertaining the mono-component grout, it is fundamentally a mortar mainly made up of water, cement and aggregates (Table 2.19). For some specific applications, fly ash,

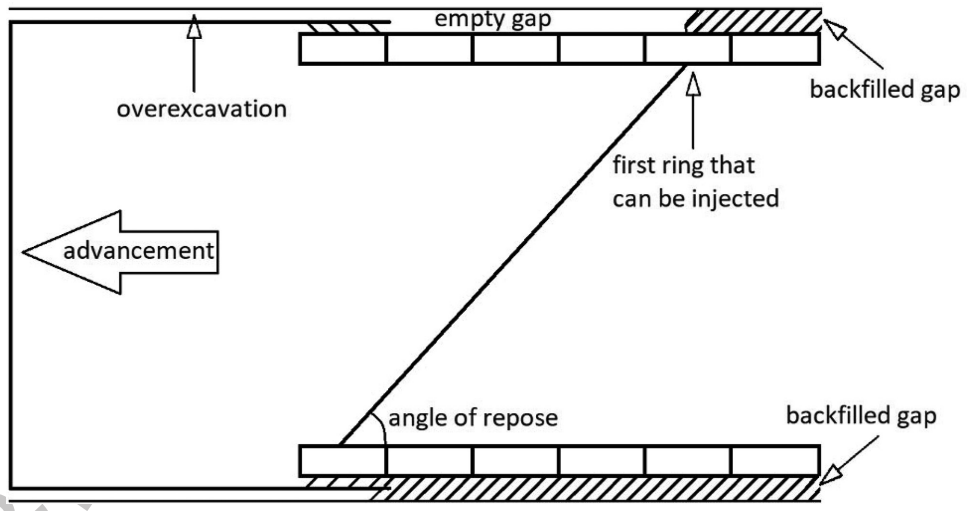

Figure 2.124 Schema of the backfilling grout performed using the pea gravel with the definition of the optima injection position according to the "angle of repose" criterion.

T&F Not for Distribution

Table 2.19 Typical ingredient ranges for the mono-component grout mix design

Ingredient	*Minimum*	*Maximum*
Cement (kg)	60	370
Water (kg)	230	520
Filler	120	580
Aggregates	880	1,530

Source: Guglielmetti et al. (2008) and Novin et al. (2015).

bentonite, silica fume and retarder are also used. It can be injected both through linings (commonly as secondary or tertiary injections) or through the shield nozzles (the main backfill grout injection). It is currently used in many construction sites; however, it provides less result in terms of settlement control respect the two-component grout due to longer hardening time. Moreover, it can be easily washed out by water flow, but, on the other hand, it is undoubtedly the material with the higher potential in terms of final achievable strength performances. It can be used complementary with the pea gravel.

The two-component grout is the youngest one between the backfill grouting technology and its first use is reported in Hashimoto et al. (2005) concerning the construction of No. 4 line of the Osaka subway (Japan) and, since its first usage, the technology puts in view a very good attitude to minimise the surface settlement and shows some operative advantages that will be discussed in the following.

The two-component grout technology is based on two liquids, called in jargon components *A* and *B*. Component *A* is a mortar, made up of water, cement, bentonite and retarding/fluidifying agent while component *B* is an accelerator (commonly a sodium silicate solution). While component *A* is produced locally on the construction site external yard with a specific batching plant, suppliers provide component *B* in the unaltered state. In Table 2.20, according to the available scientific literature, typical dosages for the two-component grout technology are reported. Particularly, pertaining to the cement and the bentonite, the abroad range depends by the wide products available on the market.

Both components are directly pumped to the machine tanks from the external batching plant pumping system. On the machine, specific tanks store them making

Table 2.20 Typical ingredient ranges for the two-component grout mix design

Ingredient	*min*	*max*
Cement (kg)	230	480
Water (kg)	730	872
Bentonite (kg)	25	60
Retarder/fluidifying agent (l)	1	7
Accelerator (l)	50	100

Source: Peila et al. (2015), Ivantchev and Del Rio (2015), Novin et al. (2015) and Camara (2018).

T&F Proofs – Not for Distribution

available volumes useful usually for 1 stroke + 50%. Specific pumps feed the backfilling lines (different for the components) till the nozzles. Just some centimetres before the nozzles exit, and only here, the components are turbulently mixed, whereupon the unique flow of backfilling material exits under a certain pressure value. After the mix, for a time-lap called "gel time" the mix saves its liquid state, after that it gels, starting instantaneously to increase its mechanical performance (Todaro et al., 2019).

Due to the possibility to transport the backfilling components simply by pumping them along the tunnel, the immediate support provided to linings, low costs of raw material and easy maintenance operations, the two-component grout is diffuse. Anyway, in order to correctly guarantee all these positive features, a strong design phase is required. The design phase regards the "core" of the technology, namely the mix design. The mix design is a document, inserted in the technical specification of the construction site, where raw materials with their commercial names and their dosages are listed.

The drawn of the mix design is function of the tunnelling project design, and it must be carefully studied, since it manages the component *A* properties and the hardened grout ones. Briefly, the engineering parameters taken into account for drawing a mix design in compliance with the technical requirements are as follows:

- *Pumpability and workability*: assessed by checking component A viscosity daily up to 72 hours from the batching;
- *The stability*: assessed by evaluating the bleeding and the unit weight;
- *The gel time*: assessed according to an experimental procedure (Todaro et al., 2019);
- *The strength at short and long curing time*: assessed by using a pocket penetrometer, the UCS and the direct shear test (Todaro et al., 2020a, 2021);
- *The elastic parameters*: commonly required at short curing time, they are the longitudinal elastic modulus (E), the shear modulus (G) and the Poisson's ratio (Todaro et al., 2020b);
- *The washing out resistance*: it is the grout attitude to resist at the groundwater flow.

2.7 VERTICAL AND INCLINED EXCAVATION

Vertical or sub-horizontal/inclined shafts are sometimes used within large underground civil works for both permanent excavations (e.g. for ventilation shafts of long and deep tunnels) and temporary access shafts needed for the excavation of the underground works.

The used devices mainly depend on shaft diameter and depth, the local geological and geomechanical conditions and the job site accessibility and the used technologies are frequently derived from the mining field where the use of vertical shafts is a common practice. The design of the excavation process and of the shaft supports follows the same approaches and methods usually applied for sub-horizontal tunnel obviously considering the different geometry and state of natural stress. The design methods and tools that can be used are presented in Volume 1 of the book. The most frequently used technologies and excavation schemes, applied in civil works, are as follows:

T&F Proofs – Not for Distribution

1. *Conventional method (top-down).* The excavation is carried out starting from the surface and the muck is extracted by conveyor belts or by cranes and portal cranes. The excavation needs to organise the handling of the workers (e.g., hanging cage) and the equipment inside and outside the working area.

   When a tunnel or a cavern already exists at the bottom of the shaft to be excavated a discharging hole can be drilled inside the shaft and can be used for transporting by gravity the muck towards the bottom of the shaft from where it is removed. The excavation can be carried out in rock masses by drill and blast method, and special jumbos are normally used. (Figures 2.128 and 2.129). During the excavation, the shaft walls are supported using temporary supports such as bolts and shotcrete and then final lining is cast in place. When the shaft is excavated in soil, the shaft walls must be pre-supported using the consolidation technologies already described in Chapter 8 of Volume 1 and Chapter 4 of this volume, or by using diaphragm walls. In water bearing soil, the control and management of the water income is one of the key issues. Good examples of shafts supported with jet grouting are the shafts on the Italian side of the Brenner Base Tunnel project used to start the excavation (after having implemented ground freezing around the tunnels), of four parallel tunnels built to underpass the Isarco river. To carry out the ground freezing and excavation works for the tunnels below the Isarco river, it was necessary to build four elliptical shafts, with diameters ranging between 32 and 54 m and a depth of ~27m, two on the hydraulic left and two on the hydraulic right of the river (Figure 2.125).



Figure 2.125 Picture of the construction phase of the four shafts near the Isarco River. (Courtesy of BBT SE.)

T&F Proof not for Distribution

At the bottom of the shafts, construction sites were set up for ground freezing and excavation works for the tunnels, while at the top of the shafts, two crane bridges were installed to lower the necessary vehicles and equipment for the works and to remove the soil from the tunnel excavations below the river. In the following, the execution of construction phases for the four shafts and their main features are shortly described.

Before excavating the shafts, it was first necessary to carry out soil consolidation with columnar vertical jet-grouting treatments. The treatment of the soil using two fluid jet-grouting allowed the construction of a temporary support structure ~3 m thick, together with an 8 m long treatment below the bottom of the shaft. The excavation and ground reinforcement works were designed in order to create a waterproof layer thick enough to resist the significant external hydraulic pressures and under-pressures. In the project, nominal diameters of 2 m were adopted. The monitoring of the energy balance according to the operating parameters seems to be noteworthy, as specific energies of 65–70 MJ/m are expected for treatments with a 2 m diameter. After completing the consolidation works from the surface, the shaft was excavated, and the vertical walls and floor base slab lining were built.

The walls of the shafts, 120 cm thick, are made of reinforced concrete and have been built using the "sub-foundation" method: excavation of the shaft 2 m at a time and consequently construction of the annular ring of concrete wall (Figures 2.126–2.129).

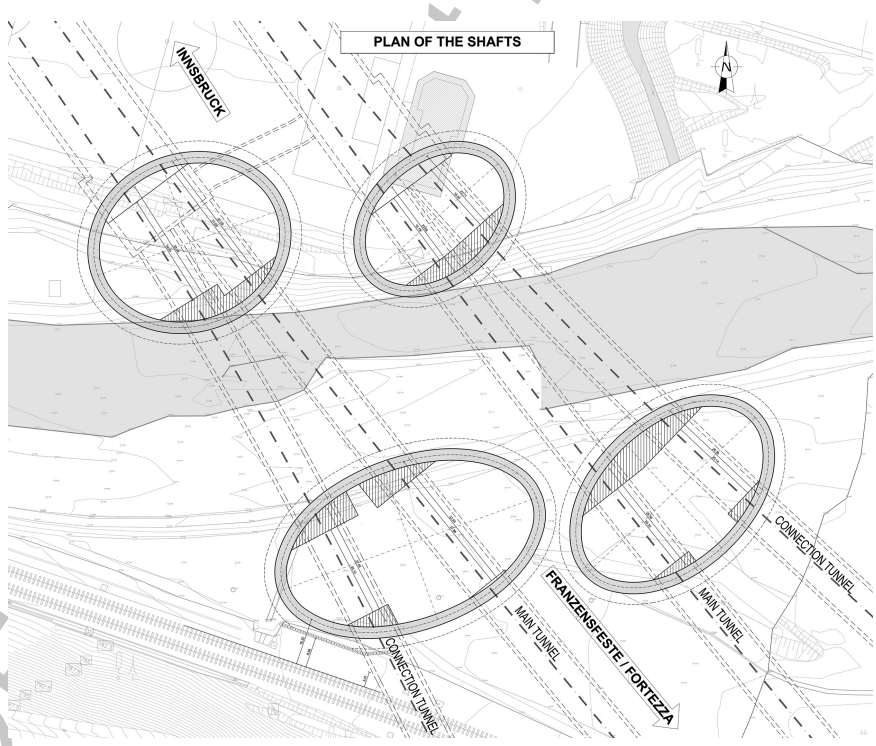

Figure 2.126 Map layout of the four shafts with dotted lines for the four tunnels crossing them (two main tunnels in the middle and two interconnecting tunnels on either side). (Courtesy of BBT SE.)

T&F for Distribution

9781032307473_C002.indd 169

T&F

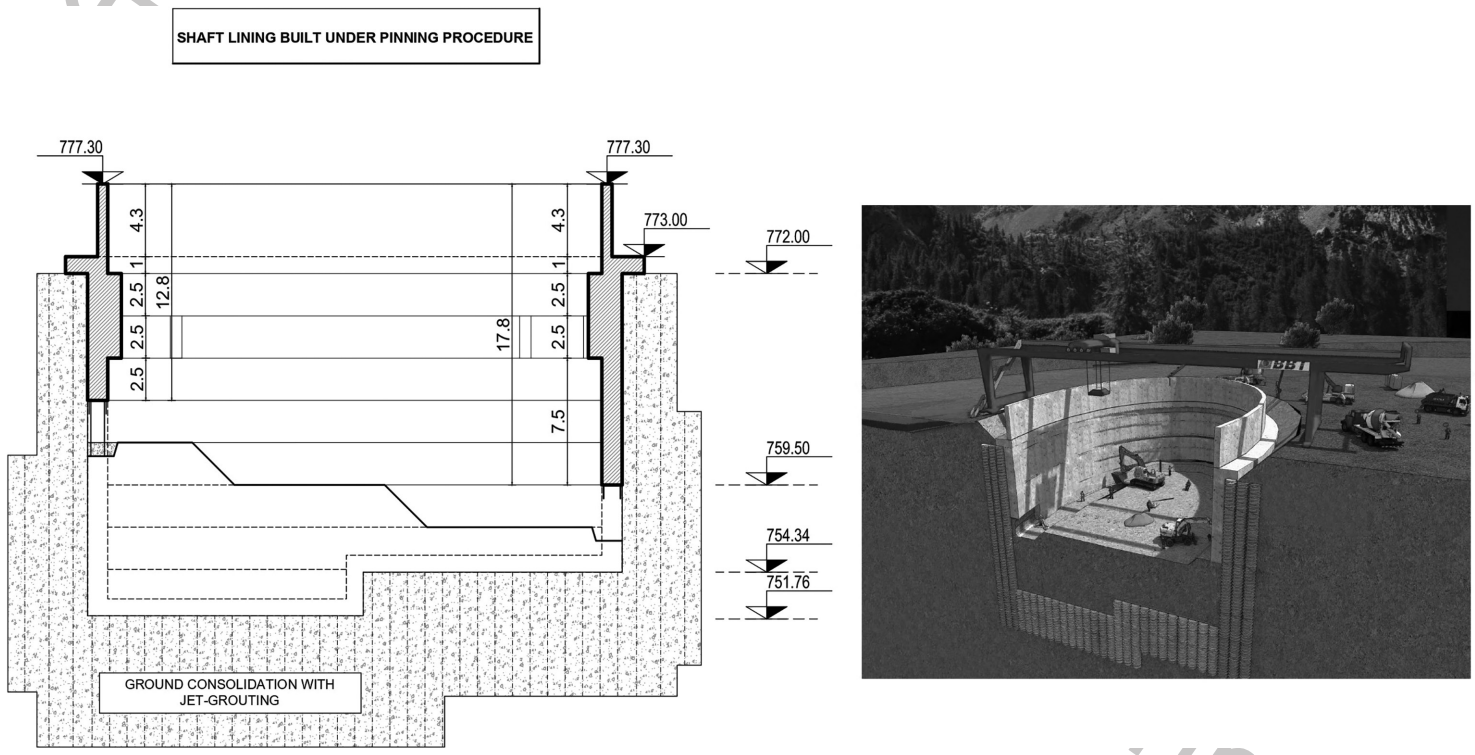

Figure 2.127 Vertical section and 3D rendering of the excavation and sub-foundation lining phases of one of the four shafts. (Courtesy of BBT SE.)

...ibution

02/06/22 8:22 PM

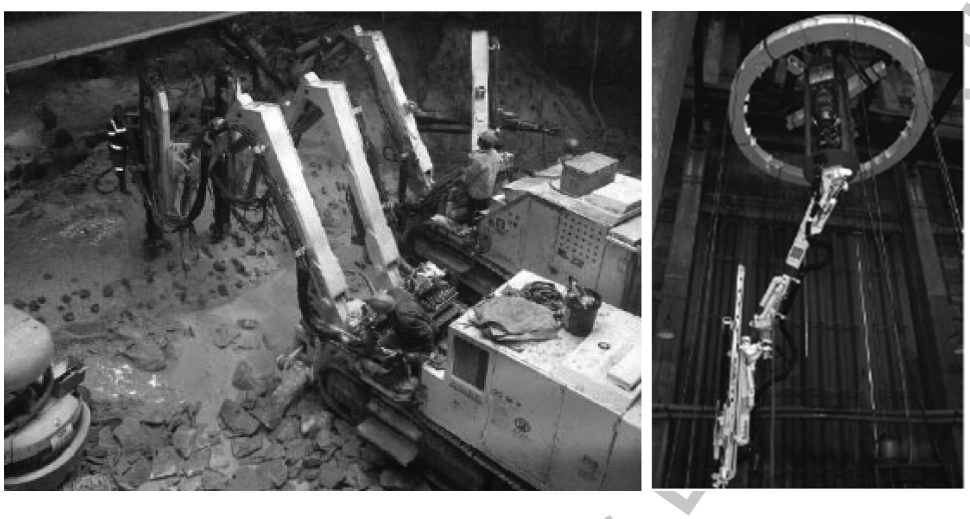

Figure 2.128 Example of shaft drilling jumbos. (Courtesy of Robodrill.)

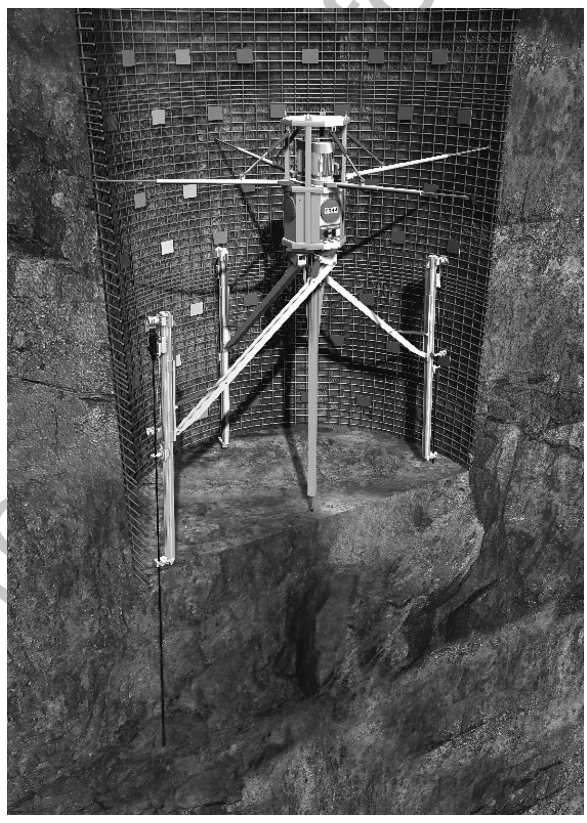

Figure 2.129 Example of shaft drilling jumbo. (Courtesy of Herrenknecht.)

T&F Proof for Production

2. *Conventional excavation method with a raise climber (bottom-top).* In this application, a special rack and pinion equipment, as Alimak, can be used to transfer, through a steel guide, a suitable platform to the excavation face from where drilling and charging the blast round. The platform is then removed before the blast. The excavation process can be handled manually or using mechanical drilling equipment. The blasted rock falls in the excavated shaft and it is mucked out at the bottom. The supports such as rock bolts or shotcrete can also be installed using the moving platform.
3. *Mechanised excavation with a down reamer (top-down).*

   When a tunnel or a cavern already exists at the bottom of the shaft to be excavated, after having drilled a central borehole connecting the surface with the cavern, a reaming equipment can be used.

   The cutterhead of the reaming machine is provided by rock tools similar to those used for a rock TBM and excavates the rock that falls down through the central hole. This application can also be used to enlarge an already existing shaft (Figures 2.130 and 2.131).
4. *Mechanised excavation with box hole boring (bottom-top).* The excavation is executed by a cutting head through a combination of pushing and rotating forces. These machines are designed for stable rock and can work with rock compressive strengths up to 180 MPa or more. A cutterhead provided by rock tools excavates the rock and the chips fall through the centre of the rig. The excavated material is transferred to a chute at the jacking frame via channels introduced into the

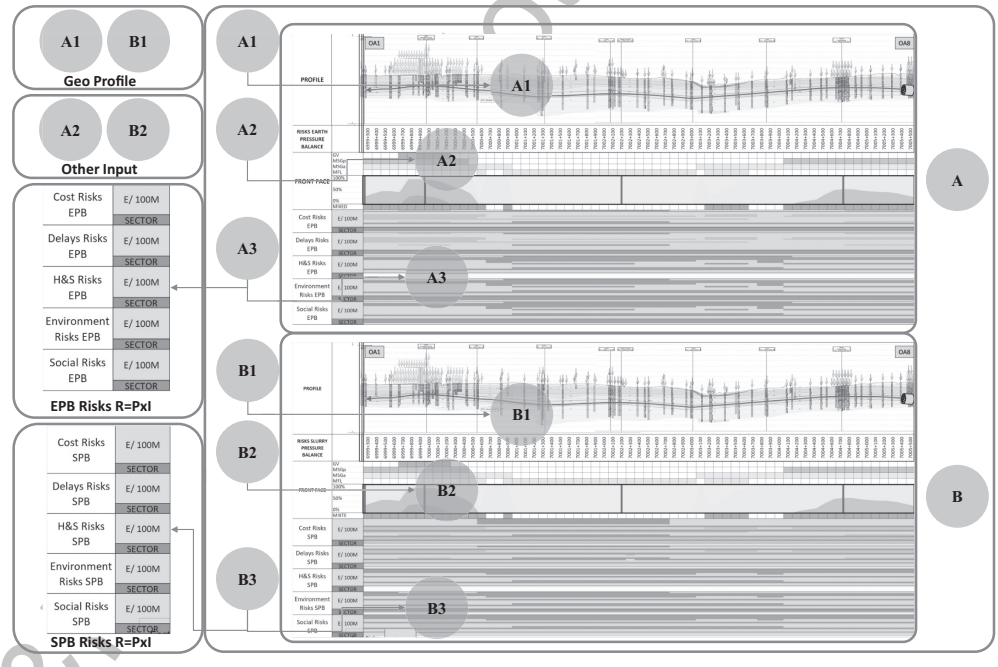

Figure 2.130 Example of a large diameter shaft down reamer. It is possible to see the working platforms and the devices used for bolting the shaft walls. (Courtesy of Herrenknecht.)

T&F Proof for Distribution

FAMILY i	Pi	ID	SUB-FAMILY j	Pj
SETTLEMENTS CONTROL	25%	R-01	Difficulty in controlling settlements	50%
		R-09	Difficulty in controlling the front during prolonged shutdowns causes settling and extra maintenance	50%
			Sub-Family total	**100%**
MUCK MANAGEMENT	25%	R-11	Polluted ground requiring special treatment	50%
		R-12	Excavated ground disposal requiring special treatment	50%
			Sub-Family total	**100%**
OPERATION AND MAINTENANCE	25%	R-02	High hydrostatic pressure (Application field)	5%
		R-03	Presence of boulders causing extra maintenance	15%
		R-04	Presence of mixed rock/soil front causing additional	15%
		R-05	High presence of fines causing clogging	20%
		R-06	Presence of grainy ground making it difficult to control pressures	20%
		R-07	High hardness/abrasiveness reduces advancements and increases costs	10%
		R-08	Difficult access to the excavation chamber in case of need for extra maintenance	5%
		R-10	Ground with presence of gas	10%
			Sub-Family total	**100%**
OTHER FACTORS (INSTALLATION, INSTALLATION SIZE, ETC.)	25%	R-13	Complexity of the installation requires extra costs	33%
		R-14	Complexity in operation requires extra costs	33%
		R-15	Dimension of construction sites is higher	33%
		R-16	Capital investment is higher	0%
			Sub-Family total	**100%**

Figure 2.131 Example of the small diameter shaft down reamer (Courtesy of Terratec).

jacking pipes. After each jacking stroke, the drilling process is stopped for a short time, to secure the pipe string and the drilling unit. When the desired drilling length is reached, the drilling unit is retracted. The jacking pipes are removed, and the drilling unit is returned to the jacking frame. In some applications, a borehole is mechanically excavated along the whole shaft and used as a guide for the cutterhead. The tools are usually disks provided by tungsten carbide inserts.

5. *Raise-boring technology (bottom-top).* It is probably the most known and used system for vertical shafts construction when an already existing excavation exists at the bottom of the future shaft. A small-diameter pilot hole is therefore first drilled to reach the lower opening with a standard drilling procedure and that depends of the depth of the shaft. The drilling must be carefully driven particularly in very deep shafts to avid deviation that could prevent the drilling to reach the already

T&F Proofs

existing excavation. The enlargement of this pilot hole is handled by a cutting head (also called reamer), that is pulled from the surface by the rig (and therefore the excavation is upwards) and that is provided with cutter tools with a design to guarantee a homogeneous distribution of the load on the rock mass and on the lifting pipes (Figures 2.132–2.134 shows the assembly of different cutterheads designed for different shaft diameters).

The tools are usually accommodated with 4 or 5 tungsten carbide insert rows and a diameter ranging from 9″ to 15″. A frequently used spacing between the rows of the inserts on the cutters is of 2″ and an applied load on each tool of 270 kN can be considered as a standard value. The spacing between two near path of tungsten carbide tools depends on the cutter position on the cutter head and an example is provided in Figure 2.132. The cutting performance of raise bore machines is mainly dependent on geological features of rock, specification and design of the machine, and operational parameters such as force on cutter and rotational speed. A few studies have been published in the literature related to performance prediction of the raise boring machines, and among them, it is useful to refer to Morris (1969) that developed a semi-empirical method of predicting the boring rate and cutter life while Calder, developed an empirical model to predict boring rate from drilling studies relating boring rate to uniaxial compressive strength of the rock, thrust force and hole diameter. Bilgin (1989), Bilgin et al. (2014) and Shaterpour-Mamaghani and Bilgin (2016) stated that penetration index obtained from indentation tests could be used to estimate the RBM performance while Shaterpour-Mamaghani and Bilgin (2016) developed two empirical models to estimate the performance of RBM and operational parameters such as thrust and torque values of raise-borer machine mainly based on the experimental data of indentation in the rock. Shaterpour-Mamaghani et al. (2018) developed some prevision models based on real data of a shaft excavated in Turkey. These authors obtained the following experimental formula for the instantaneous penetration (IPR expressed as m/h) expressed as a function of RQD (expressed as %) and the uniaxial compressive strength (σ_c expressed as MPa).

$$\sqrt{\text{IPR}} = -0.0122 * \text{RQD} + 0.006 * \sigma_c + 1.09 \tag{2.63}$$

6. *Mechanical excavation with reverse circulation (top-down)*: The excavation is obtained with a rotating cutting head activated through a suitable rods pack (with stabilizers) and drilling boom that can move in the whole face. The excavation is carried out mainly in water and the obtained slurry made by the chips and the water slurry is pumped along the shaft to the surface and separated by a dedicated de-sanding plant. This vertical shaft-sinking machine (VSM) is suitable in soft and mixed soils and rocky ground up to120 MPa. An upgrade of the VSM named Shaft Boring Roadheader (SBR) was developed for the mechanised sinking of shafts in soft to medium-hard rock with up to 120 MPa between 7 and 12 m for the mining industry with a complete moving shaft construction machine and it foreseen a dry excavation with a vacuum mucking system. The VSM machine allows the construction of the whole shaft to be completed without operators into the shaft and with a good control of the possible lowering of the water table.

T&F Proofs – Not for Distribution

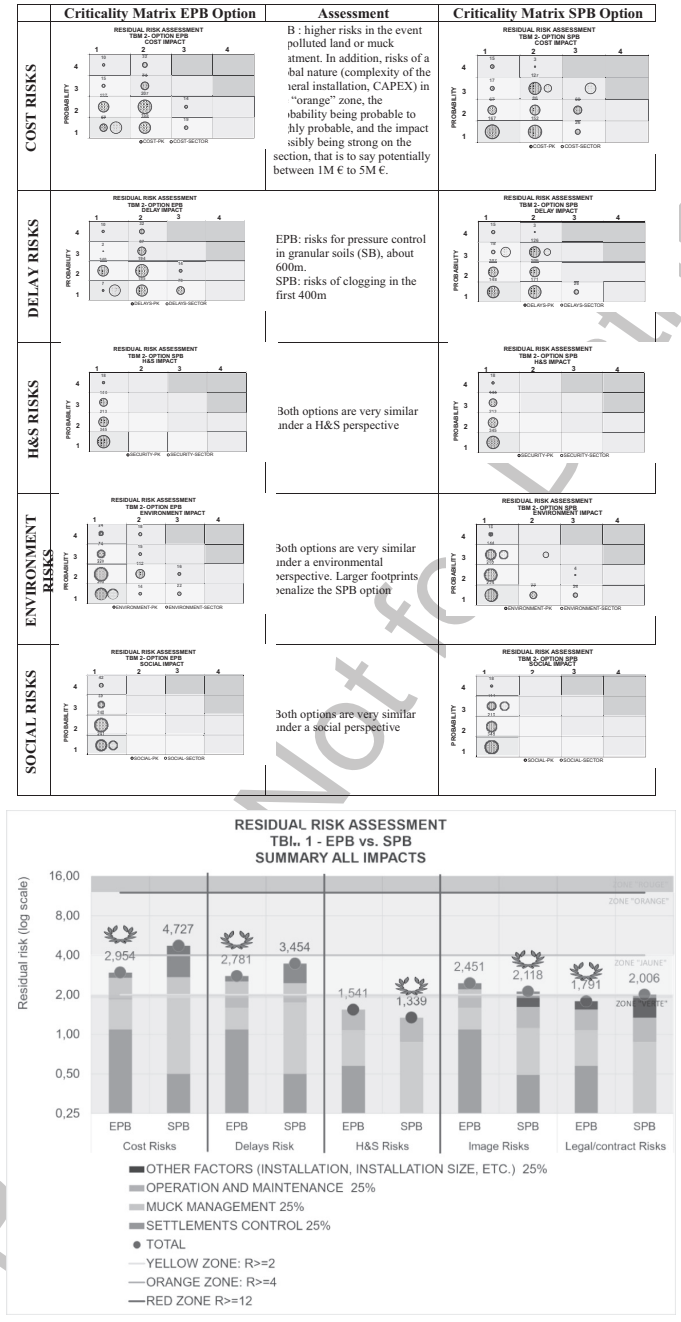

Figure 2.132 Simplified scheme of the raise-boring method. First step: drilling the pilot hole downhole to reach an existing underground opening. Second step: connection of the cutter head to the drilling pipe underground; third step: boring the shaft upward and removal of the muck at the shaft bottom in the underground openings.

T&F Proof Not for Distribution



Figure 2.133 Picture of the of the rise boring rig and of a reaming head. (Courtesy of Terratec.)

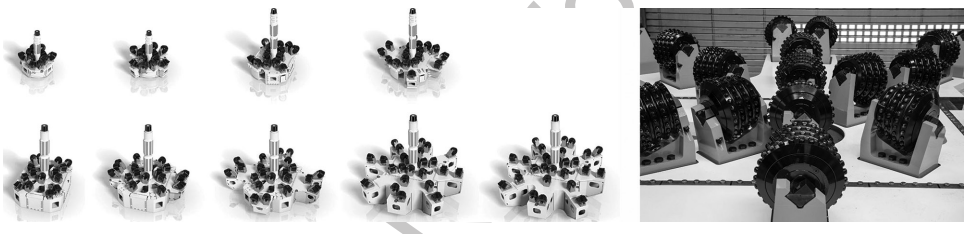

Figure 2.134 Picture of the different reaming heads for different shaft diameters and detail of the tools installed on a cutterhead. (Courtesy of Herrenknecht.)

2.7.1 Vertical shaft-sinking machines

In the following, a better description of the VSM technology is provided. The equipment includes the following main components: a shaft boring unit, a lowering unit, a separation plant and a remote-control unit.

The boring unit consists of a cutter head drum similar the one of a roadheader, driven by a telescopic swivelling and rotating boom. During operation, the boring unit is tightly fixed by hydro-mechanical devices to special steel plates welded at the bottom of the shaft's permanent lining and it can be locked/unlocked as necessary by dedicated hydraulic system. The cutter drum disaggregates soil and rock and the resulting chips, in suspension within the fluid, are pumped at the surface to the separation plant, by a pump positioned just behind the cutter drum, through a series of pipes. The boring unit is connected to the surface by means of an "energy chain" made of hydraulic hoses, electric cables and evacuation pipes (Figures 2.135 and 2.136).

The lowering unit is located at the surface and performs the function of holding and lowering the shaft lining as the excavation proceeds. It is fitted with a set of stand

T&F Proofs – Not for Distribution

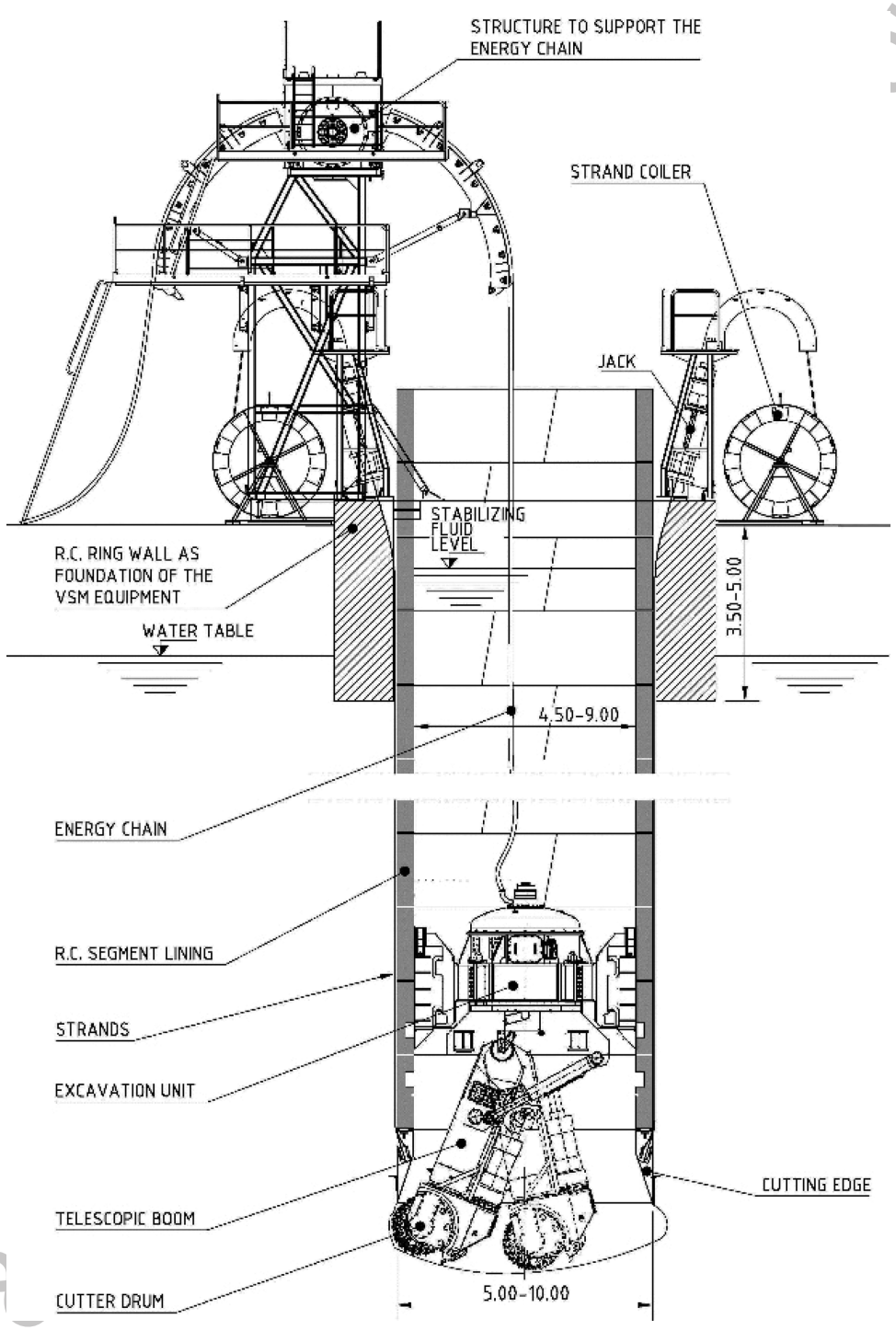

Figure 2.135 Scheme of the VSM equipment.

9781032307473_C002.indd 176 02/06/22 8:22 PM



Figure 2.136 Detail of the boring unit.

jacks, bundles of strands (each one driven by a jack), a tower to support the "energy chain" and a set of winches to recover the machine at the end of sinking or at any time when necessary. The unit is also capable of applying a downward force to the lining, should it be required, and to control and subsequently correct any boring deviation due to constant inclinometer measurements. The separation plant is located at the surface and performs the function of regenerating the slurry coming from the shaft under excavation, by separating debris from excavation fluid. It is composed of de-sanders with vibro-screens to intercept the coarser particles, and cyclones to intercept the finer particles (fine sand and silt). When boring through clayey layers, it may be appropriate to integrate a centrifuge into the plant to help the separation of clayey particles. This plant is similar to a slurry machine separation plant. The support of the shaft wall is obtained with superposed rings made up of precast reinforced concrete segments similar to those used in shielded TBM excavation (the use of cast in place permanent lining was already experienced). The lining is assembled at the surface simultaneously to shaft sinking, by erecting on top of the shaft the segments forming each ring (Figure 2.137). The segments are mechanically connected to each other by a system of circumferential bolts and a system of vertical steel threaded bars, plates, nuts and couplers (Figure 2.139) and watertight by gaskets similar to those used for soil TBMs and discussed in

T&F Proofs – Not for distribution

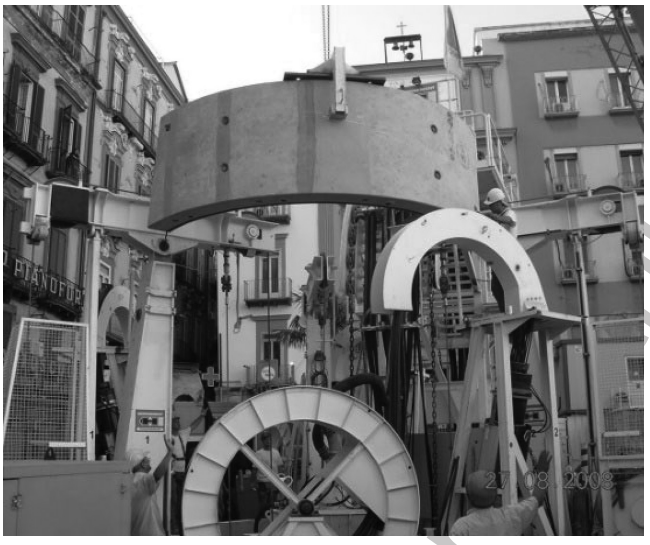

Figure 2.137 Installation of the lining segments at the top of the shaft.

Chapter 3 of this book. They can be designed using the procedures described in Volume 1 considering the loads applied to the lining (overload, soil and underground water pressure). The lowest ring, also referred to as the shaft's cutting edge (Figure 2.138) and (Figure 2.139), is made of a ring of either box-shaped steel or concrete and steel. Bevelled at the bottom, it can cut into the soil underneath. The cutting edge is fitted with an external steel ring forming an enlargement, to grind and overcut the surrounding soil, in order to ensure a temporary annular gap between permanent lining and soil



Figure 2.138 Cutting edge and strand anchoring system for lining hanging and lowering.

T&F - Not for distribution

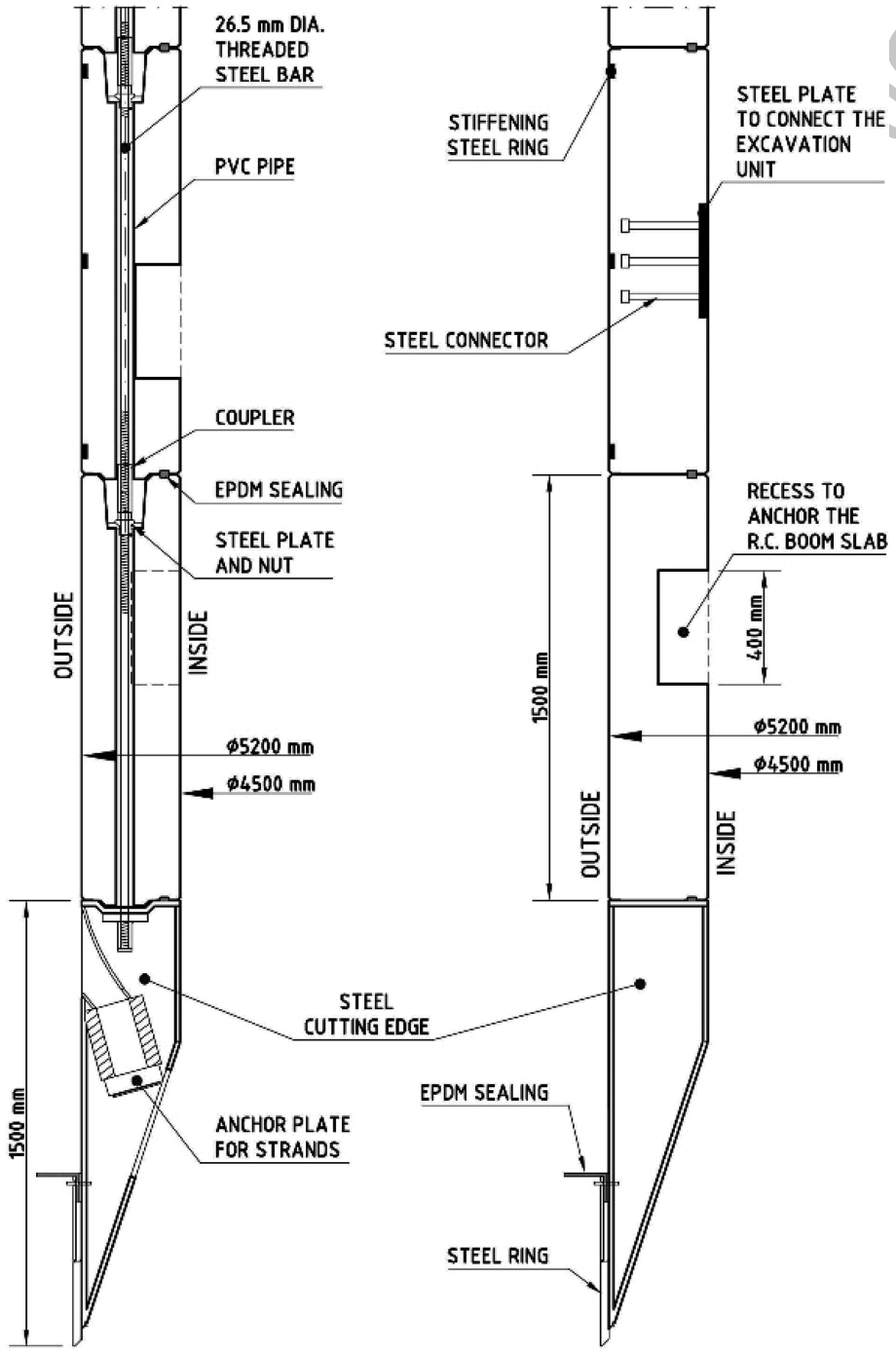

Figure 2.139 Diagram of the precast rings lining, showing connection system, lower segment and cutting edge.

T&F

for the whole duration of sinking. The cutting edge is equipped with devices to anchor the lowering strands and with a circular L-shaped EPDM seal. On the lowest precast rings, dedicated steel plates are set up on the internal surface to fasten the boring unit. As a rule, suitable recesses to allow the subsequent interlocking of the final reinforced concrete bottom slab are installed on these rings, just above the cutting edge.

The construction procedure is as follows: a pre-excavation is carried out down to 2–3.5 m below ground level using conventional methods and usually with a presupport of retaining walls. This is necessary in order to lower the first precast rings, to install and fasten the boring unit, and to prime the submerged evacuation pump at the beginning of boring. Without particular boundary restrictions, the pre-excavation may be also carried out simply by slope digging, followed by casting in place an annular reinforced concrete wall. Alternatively, when there are local constrains such as buildings or utilities or a very shallow water table, the pre-excavation is carried out as mentioned, with the aid of pre-supports or ground improvements such as secant piles or diaphragm walls that can act also as the equipment foundation during the shaft excavation. The first rings are assembled within the pre-excavation, above the cutting edge. Once the segments fitted with the dedicated steel plates are in place, the boring unit is lowered in and fastened to them. As already mentioned, the boring unit operates entirely submerged within a fluid (mainly water or sometimes bentonite slurry), which acts as a supporting medium of shaft walls and tools for the muck out of the excavated chips that are evacuated by a submersible pump installed just above the cutter drum and piped to the separation plant located on the surface, where the soil is separated from the drilling fluid. The ring-shaped gap between permanent lining and soil is continually kept full of dense and viscous bentonite slurry, for the whole duration of sinking. This also reduces the frictional forces between shaft wall and surrounding soil. The selective filling of the external gap is made possible by two features. First, the presence of special non-return valves, installed on the bottom segments at two different levels, which are fed with bentonite slurry through dedicated circuits. Second, the circular L-shaped EPDM seal, which keeps the stabilising fluid flooding the shaft separate from the bentonite slurry filling the external annular gap. The level of both fluids is maintained continuously above the water table. In this way, the soil supporting action and the water pressure balancing functions are performed. Soil and rock are disaggregated by the cutter drum, which covers programmed paths thanks to its ability to swivel up and down and to rotate 360°. Such programmed paths are controlled together with the on-going sinking process by the operator in the remote control unit. At each construction step, the soil disaggregation proceeds down to a predetermined depth, so as to create the necessary room for the partial sinking of the permanent lining which is carried out in uniform sized steps (usually 0.30–0.50 m). Simultaneously to boring, the permanent lining made of segments is lowered (or pushed, if necessary) to replace the soil removed by the cutting drum below the cutting edge. Once the lining has been sunk for a depth equal to the height of the ring, the assembly of a new ring on top of the shaft is carried out by clamping the mechanical connections, both vertical and circumferential. Now sinking of the permanent lining may be resumed as boring proceeds. This step working process of simultaneous boring, evacuation of debris, sinking of lining, segment ring assembly, is repeated up to achieve the design depth. Once the shaft sinking has been completed, the boring unit is unlocked and withdrawn using the dedicated winches installed within the hanging/lowering unit. Subsequently,

T&F Proofs – Not for Distribution

the shaft bottom is sealed by an underwater concrete plug poured through a tremie pipe, to backfill both the specific over-excavation and the lowest portion of the shaft lining. Then, the annular gap between permanent lining and soil is filled up and sealed with cement grout, creating a frictional support locking the shaft in place to avoid the long-term buoyancy. The grout, fed through the same circuits and valves already used to pump in the bentonite slurry, replaces the bentonite slurry present within the gap since the start of sinking. Finally, after suitable curing of the bottom plug concrete and gap grout, the drilling fluid is pumped off and the shaft is ready for the installation of the permanent reinforced concrete bottom slab, which is locked into the segments fitted with the dedicated recesses.

2.8 SLURRY WALLS AND DIAPHRAGM

2.8.1 Introduction

Slurry walls are diaphragm walls realised in the underground using special equipment. A vertical hole is executed in the soil filling the hole with a support suspension. Unlike thin slurry walls where the soil is displaced to the side, here the trench is produced by excavating soil material. Generally, a suspension (slurry) made of bentonite and water, the bentonite suspension, serves as support fluid (Figure 2.140).

If the support fluid is exchanged and/or replaced by another wail installation material, e.g., concrete, after reaching the design depth, the method is called two-phase method and the wall type is named two-phase slurry wall. If, however, the support suspension remains in the ground and is not replaced, it is called single-phase method and/or single-phase slurry wall. A two-phase slurry wall, where the support suspension is replaced by concrete is called a cast-in-place slurry wall. The concrete is casted in place. In the case of a precast concrete slurry wall, either precast reinforced concrete components or steel sheet pile profiles are installed in the trench of a single-phase slurry wall which has, for example, been produced with a hardening cement-bentonite suspension. In the foot section of the precast component, the suspension is replaced by concrete beforehand. A single-phase slurry wall with inserted sheet pile profiles is also called slurry wall with embedded sheet pile wall. Moreover, it is possible to install steel pipes or double-T beams. Slurry wails produced in the single-phase method with subsequent installation of precast concrete components, steel elements or sealing membranes are also referred to as combined wails. In the European standard EN 1538, a slurry wall reinforced with steel profiles, steel mats or other suitable structural elements is called reinforced slurry wall. In the following, the main technological aspects will be presented while for more information on the design aspects is possible to refer the references.

2.8.1.1 Slurry wall technique

A slurry wall is composed of several slurry wall elements, also called slurry wall panels, which are installed next to each other. The section length of such a panel depends on the excavation tool used and the stability of the suspension supported trench.

T&F Proofs – Not for Distribution



Figure 2.140 Grab excavation in port said and trench cutter in a mountains side.

It is between ~2.5 and 7.5 m. The installation of a T- or L-shaped trench is also possible. A reinforced concrete slurry wall (cast-in-place slurry wall) is created in phases, as shown in Figure 2.141.

The guide walls are auxiliary structures which are installed at ground level longitudinally to the trench to be excavated. They serve to support the trench in the upper wall section, to determine the exact position of the trench and/or the wall, to guide the excavation tool and to store the support fluid. At the same time, they allow to control and hold the fluctuating level of support fluid. They are either produced of cast-in-place concrete or precast components (e.g., cantilever retaining wall) with a height of ~1 to 1.5 m. At the excavation side of the finished slurry wall, the guide wall is demolished and/or removed again.

T&F Proofs

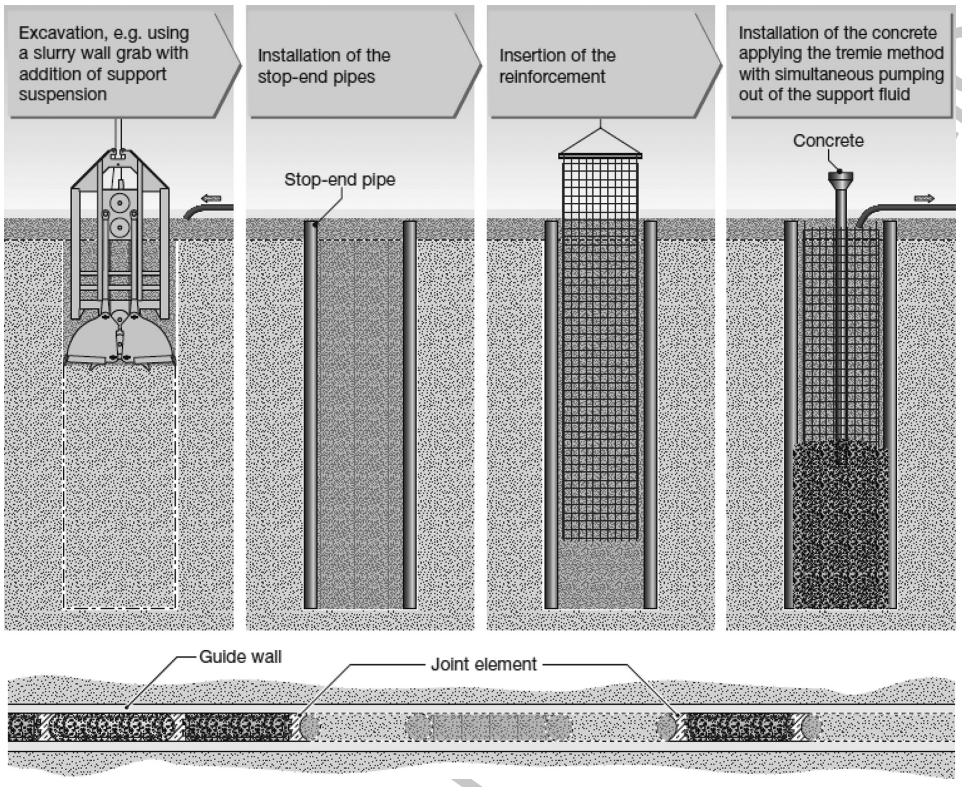

Figure 2.141 Production steps of a slurry wall primary panel with joint elements. (Courtesy of Liebherr.)

Generally, a suspension made of bentonite and water (bentonite suspension) is used as support fluid (support suspension). The bentonite suspension is treated in different ways depending on the prevailing soil type and the sort of bentonite used. Depending on the requirements regarding depth, width and type of soli, excavation of the trench is carried out applying the grab excavation method or using a slurry wall cutter. During excavation the bentonite suspension is continuously added. In doing so, it is important to observe that the variations of the fluid level in the trench are always kept within the guide wall height. After completion of the trench for a two-phase slurry wall, the suspension, which is contaminated with soil material, is displaced by the introduced concrete and then pumped off. As it cannot be reused in this condition and transportation to a landfill is too cost-intensive and too complex for reasons of environmental protection, the suspension is regenerated for reuse in a regeneration plant. For installing a continuous slurry wall, single elements are first produced with gaps between them (primary trench) and after these panels have hardened the secondary trenches between them are excavated and concreted. As lateral limitation of the elements towards the soil stop-end structures are installed. These are mainly steel pipes (also called stop-end pipe, planking pipe or joint pipe) with a diameter corresponding to the wall width. They are extracted again as the secondary trench is produced.

T&F Proofs – Not for Distribution

This provides a neat connection of maximum impermeability to the next panel. Instead of steel pipes which need to be extracted again, it is also possible to insert permanent precast concrete components as joint elements fitted with joint tapes, if required. If the trenches are produced with a slurry wail cutter, the narrow sides of the previously concreted panels are cut over again during installation of the secondary trench in order to achieve a seam of maximum impermeability. Thus, in some cases no more stop-end structures are required between the single panels. For a reinforced concrete slurry wall reinforcement is installed after completion of the trench. The reinforcement cages are delivered preassembled. Usually, the complete reinforcement cage is lowered into the suspension-filled trench with the help of a guiding structure. In case of very long trenches, it is also possible to install two or more cages next to each other. For very deep trenches, the cage is made of individual sections which are assembled while suspended in the trench. The concrete must always be filled into the trench using concreting pipes, which have to be tightly connected to each other, applying the tremie method as for installing concrete under water. Reinforcement installation and concreting always require the use of an additional lifting device on the jobsite. The most common slurry wall widths are 60, 80 and 100 cm. Smaller and larger widths, up to 200 cm, are also produced. The design and production of cast-in-place slurry walls is regulated in the European standard EN 1538. They also include detailed information and execution guidelines on concrete and reinforcement. According to these standards the minimum width of such a wall should be 40 cm, in the planning stage only the widths 40, 50, 60, 80, 100, 120, 150 and 200 cm should be considered.

2.8.1.1.1 SLURRY WALL INSTALLATION USING THE GRAB EXCAVATION METHOD

The most common excavation tool for slurry wail production in unconsolidated rock is the rope operated grab. In hard soli layers or rock, the soli is first broken up with a heavy free-fall chisel and subsequently extracted using the grab excavation method. For trench depths of up to 10 m, a narrow backhoe can be used as excavation tool. This method is not covered here in detail.

A slurry wall grab is always a clamshell grab with a jaw width corresponding to the wall thickness and an opening width of ~2.5 to 3.5 m. Above the grab there is a long base body, also called guide frame, with large runners with a width corresponding to the trench width. In addition, this steel frame provides the weight required to loosen the soil in the trench. The fundamental grab types are the mechanical and the hydraulic slurry wall grab (Figures 2.142 and 2.143).

The mechanical slurry wail grab is a double rope grab. It consists of the guide frame, two grab jaws mounted below, a pulley system situated in the base body and the head with suspension device. lts mode of operation corresponds to that of a hammer grab in double rope operation. Depending on the closure system the closing rope is reeved three to six times and thus, high closing forces can be achieved. Mechanical slurry wall grabs allow to install trenches down to a depth of ~50 m. The hydraulic slurry wall grab is a grab which is opened and closed with a hydraulician driven rod mechanism. Its hydraulic mechanism is fed via hoses from the carrier machine. Such a grab can also be mounted on a Kelly bar which provides especially good guidance in the trench. Extending or retracting of the grab is carried out in a similar way as with

T&F Proofs - Not for Distribution

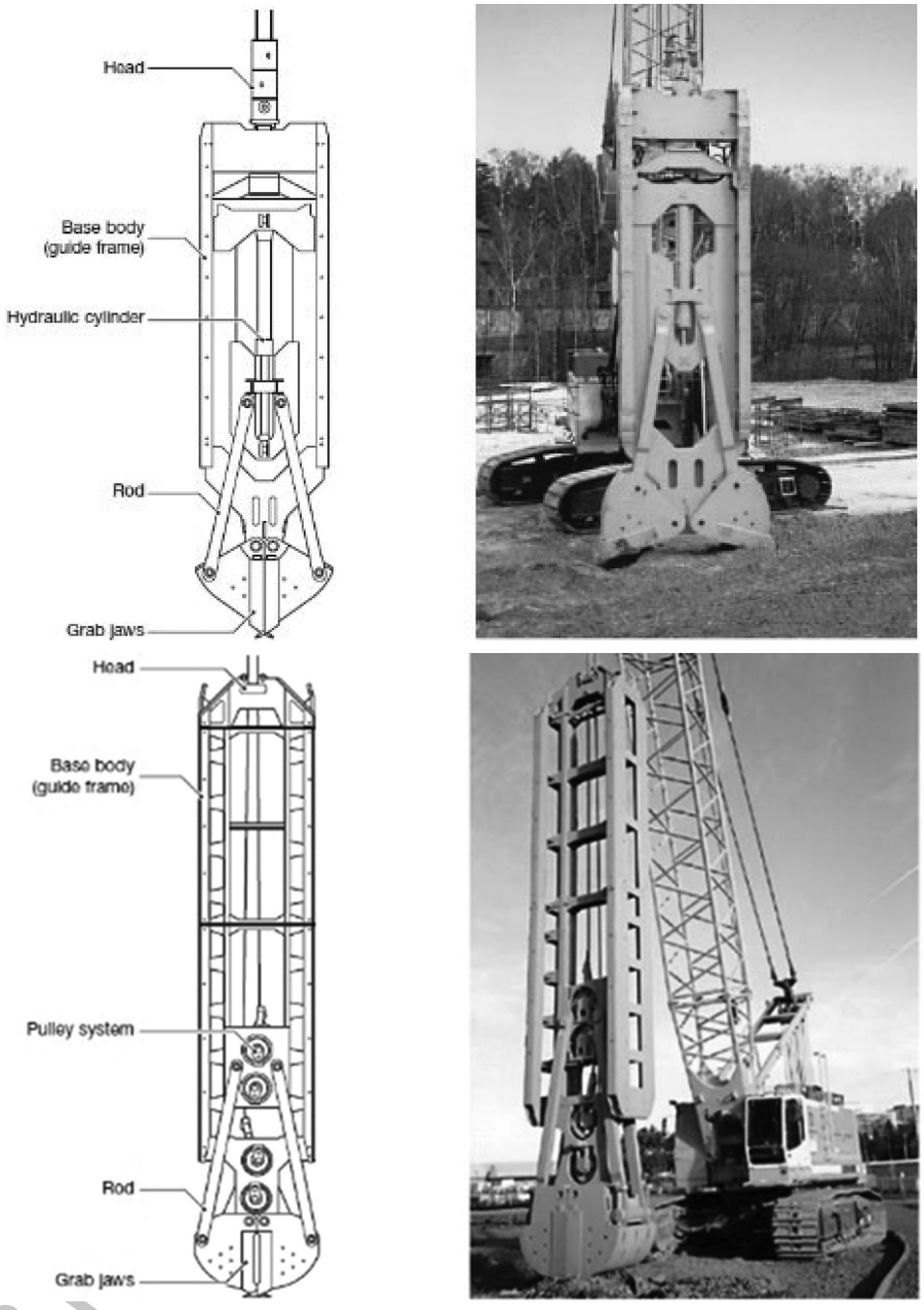

Figure 2.142 Mechanical and hydraulic grab.

Taylor & Francis



Figure 2.143 Picture of LWN HSG 5–18 working in the Milan metro.

Kelly drilling for installing drilled plies. Hydraulic slurry wall grabs can equally be equipped with an integrated permanent measuring and control system which allows to detect deviations from verticality during excavation. The deviation is then adjusted by changing the grab's direction. Most slurry wall grabs offer the possibility to exchange the grab jaws for various applications (soil conditions) and for various trench widths. Thereby, the guiding rails on the base body can also be adapted to the changed trench width. Both grab types are available in special short designs, which - combined with the correspondingly designed low carrier machine - provide that slurry wall work can also be carried out where headroom is limited, e.g., under a bridge. Using the grab excavation method, excavation is carried out intermittently. The soil extracted by the grab is mixed with support fluid and deposited in an excavation pit or a steel container (transport skip), out of which the support suspension is pumped to the regeneration plant.

2.8.1.1.2 SLURRY WALL PRODUCTION USING THE CUTTING TECHNIQUE

With the development of the cutting technique in the 1970s the possible applications of the slurry wall technique were significantly extended. Using this technique slurry wails can be produced in nearly all types of soil, including rock, down to great depths of 100 m and more. Instead of grab jaws (which is normally used to excavate only the first trench's metre), the slurry wall cutter has a cutting head at the bottom of the base body (here called cutter frame). The cutter continuously breaks up and crushes the soil

T&F Proofs – Not for distribution

at the bottom of the trench. The soil which is mixed with support suspension is immediately pumped to the surface through a hose line. The suspension which is mixed with the soil cuttings is cleaned in a regeneration and separation plant. In this process, the bentonite suspension serves not only to support the trench but also facilitates the extraction of the solid material. The process is shown in Figure 2.144.

The cutter head consists of two or four cutter wheels rotating against each other which are mounted on the bottom of the long and heavy steel profile frame. The cutter wheels are geared drums fitted with cutting blades. The cutting blades are specially equipped for the soil layers which have to be penetrated. The width of the cutter wheels corresponds to the thickness of the slurry wall. They are driven by the on-board hydraulics of the carrier machine, usually hydraulically but sometimes also electrically. The pump for extracting the soil-suspension mixture is a hydraulically driven centrifugal pump which is mounted in the cutter frame directly above the cutter wheels.

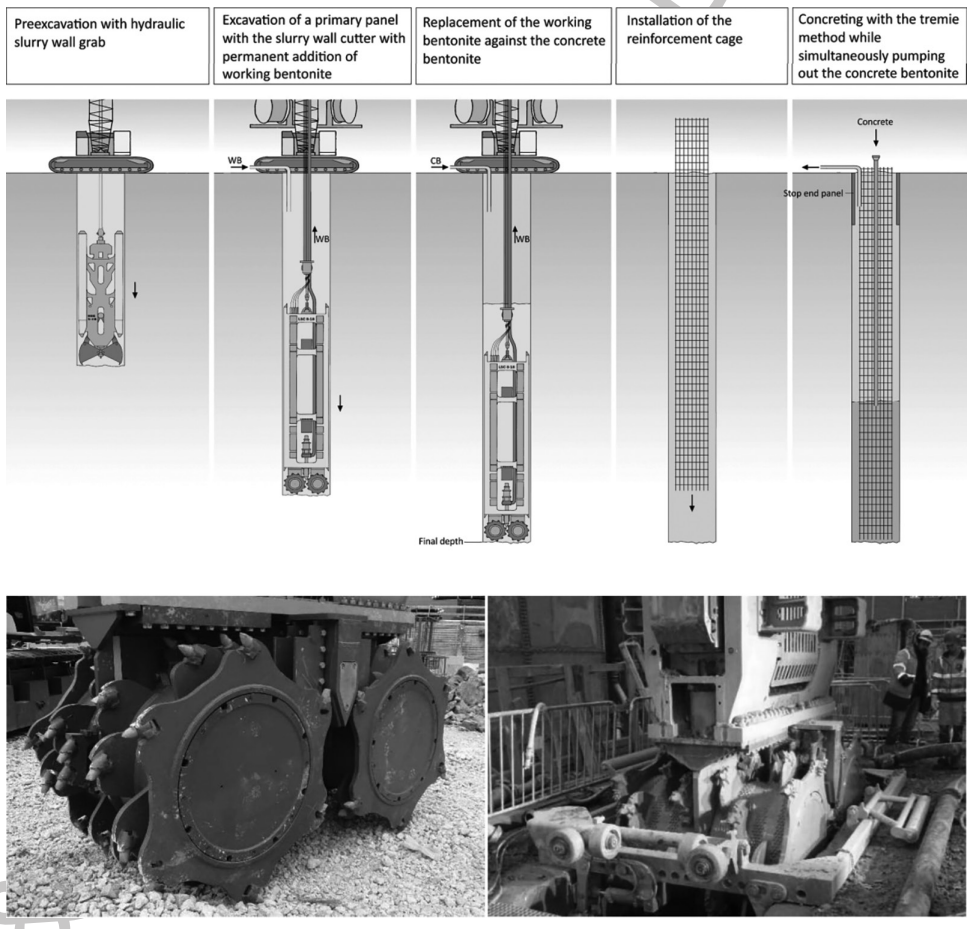

Figure 2.144 Trench cutter excavation and wall construction process - guide frame and cutter wheels. (Courtesy of Liebherr.)

T&F Distribution

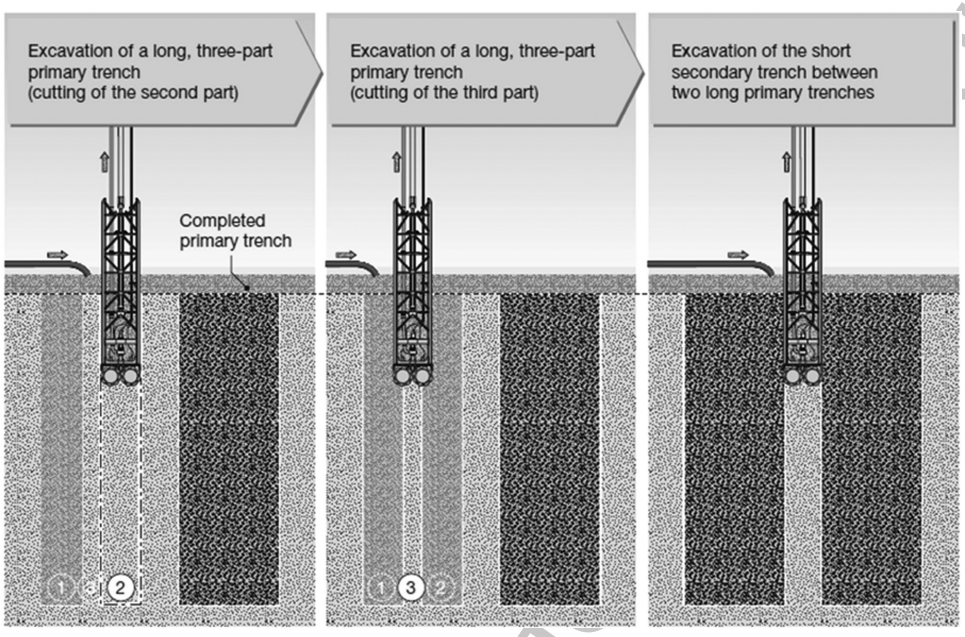

Figure 2.145 Operations for a multiple panel excavation. (Courtesy of Liebherr.)

The hydraulic and the extraction hose package is usually guided over a hose reel. The primary trench of a cut slurry wall is predominantly installed in three steps. Trenches 1 and 2 are produced in cutter width, trench 3 with 50% of the cutter width, in the ideal case. The width of the primary trench corresponds to approx. two and a half times the width of the cutter frame. The secondary trench is only as wide as the cutter frame, see Figure 2.145.

2.8.1.1.3 TREATMENT AND REGENERATION OF THE SUPPORT FLUID

The treatment and regeneration plant is an essential component aft the equipment necessary for a slurry wall jobsite and it usually requires a lot aft space. For treatment aft the bentonite suspension, a large and powerful mixing plant is needed. Moreover, storage containers for the suspension have to be set up in order to prevent the risk aft a sudden loss of suspension and subsequent caving-in of the trench. These containers have to be able to accommodate approximately twice the trench volume. In case of cut slurry wails, it is advisable to store 2.5 times the trench volume. In the regeneration plant, the solid constituents are separated by e.g., riddles, cyclones and centrifuges, and by controlled addition of bentonite till the required properties of the support suspension are re-established. The capacity of the mixing and regeneration plant, e.g., the possible amount of suspension that can be delivered per hour, must at least be equal to the amount of excavated soil plus the amount of suspension extracted together with the excavation material. In the case of a cut wall, the amount of energy required is considerably higher than for a grab excavated wall. Plants with a throughput rate of up to 500 m^3/h are necessary (Figure 2.146).

T&F Proofs – Not for Distribution

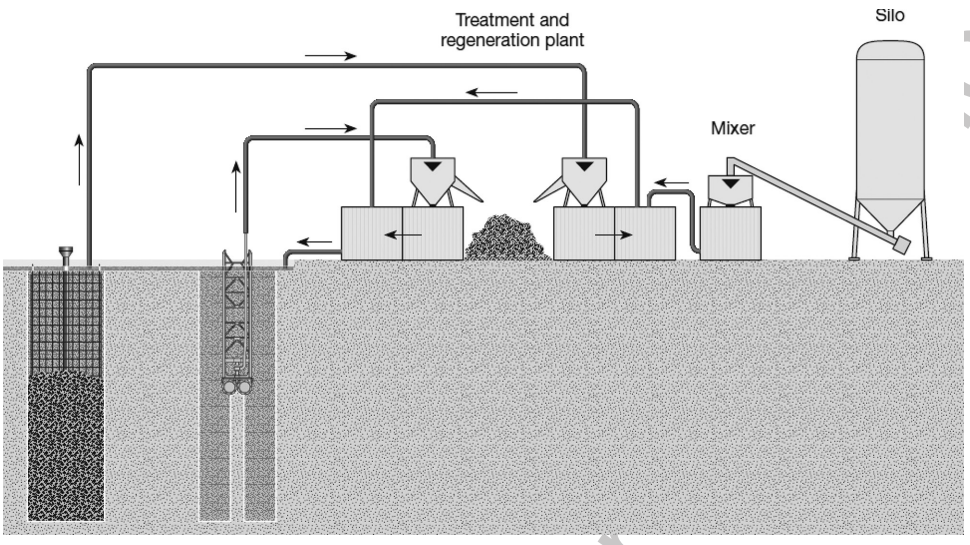

Figure 2.146 Functioning principle of a de-sanding plant. (Courtesy of Liebherr.)

2.8.1.2 Applications of slurry walls in tunnelling

Slurry wails are suitable for both temporary and permanent purposes. They can be produced in various wall thicknesses usually between 40 cm and 1.2 m down to depths of up to 100 m. They can basically be erected in all soil types. Slurry walls can be installed directly in front of buildings. During production using the grab excavation method only little vibration is generated, during production by cutting there is practically no vibration. The main application of reinforced concrete slurry walls is in the field of walls which are mainly exposed ta statically horizontal and/or vertical pressure. They are considered to be practically free of deformation and therefore especially suitable for e.g. foundation pit linings which have to be extraordinarily strong. They are predominantly installed in areas influenced by near building foundations for foundation pits in inner-city areas. Compared to other types of retaining walls they are almost impermeable to water and thus very suitable for enclosures in high groundwater levels.

Steel sheet pile walls inserted in the trench are also applied as a variant instead of a reinforced concrete slurry wall. They are produced as temporary foundation pit enclosures and as permanent cut-off walls. Precast components made of steel or reinforced concrete can also be inserted in the suspension supported trench. Another wide field of application for reinforced concrete slurry walls is the installation as permanent external walls of an underground building, e.g., for basements, underground carparks, road and underground line tunnels. Thereby, the slurry walls serve as retaining wall of the foundation pit and, at the same time, as final structural wall. In this case, the so-called cut-and-cover method is frequently applied. For this method, the building cover, which rests on the slurry wall, is concreted directly on the ground even before the soil is excavated. Under this concrete cover the excavation for the underground building, e.g., a road tunnel or an underground carpark, is carried out. Some applications in the Underground Engineering are shown in Figure 2.147.

T&F Proofs – Not for Distribution

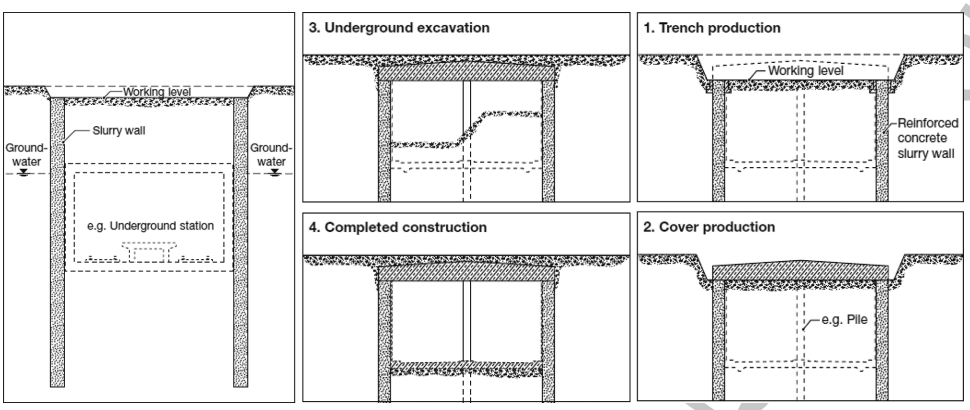

Figure 2.147 Slurry wall for underground metro station and "Cut and Cover" method. (Courtesy of Liebherr.)

Single or combined reinforced concrete slurry wall elements can serve as deep foundation elements (instead of piles) to absorb tensile forces in the soil and a wide field of application for slurry walls is cut-off walls under dams to seal of groundwater and leakage water currents.

Cut-off slurry walls are used for sealing off against groundwater, e.g., for embankments or for impermeable enclosures (containments) of landfills, to prevent the distribution of polluted groundwater or other harmful liquids in the soil. They are usually produced in the single-phase method, whereby the support fluid is also the sealing compound, e.g., a suspension and cement basis with decelerated hardening process. With the help of special installation devices, it is also possible to insert plastic sealing membranes as additional sealing elements in the cut-off slurry wall. For sealing purposes, plastic concrete walls are after produced. This is a two-phase slurry wall where a special plastic concrete is installed using the *tremie* method.

2.8.1.3 Characteristics, special features

The slurry wall technique is a very favourable construction method. It allows erecting slurry walls almost without any clearance directly in front of existing buildings and/or foundations. Moreover, only very little vibration is caused when cutting.

Compared to other lining wall types, slurry walls made of reinforced concrete are almost insusceptible to deformation when exposed to loads. For installation depths exceeding 25 m, reinforced concrete slurry walls are much more reliable than pile walls with regards to installation accuracy.

Using the cutting technique very high accuracy of the walls can be achieved thanks to state-of-the-art measuring systems. The same Is true for the production as cut-off slurry wall.

If reinforced concrete walls are produced as permanent outer walls for underground buildings which are exposed to static loads, they are a cost-efficient and time-saving method for inner-city tunnel constructions and buildings with several underground stores.

T&F Proofs – Not for Distribution

If professionally built they are impermeable in that no dripping or trickling water occurs on the inside. Thus, they can be installed without an additional impermeable cover, e.g., for underground carparks or road tunnels, without being susceptible to frost.

Reinforced concrete slurry walls and/or reinforced concrete slurry wall elements can be utilised to absorb alternating loads of any kind (pressure, tensile and bending loads). The slurry wall technique can be carried out down to great depths (100 m and more).

2.8.1.4 Limitations

A limitation of the application is only due to the location and profitability when compared to other technical solutions in special situations. Thereby, the size of the machinery used, the possibilities of transportation to the jobsite and the extensive requirement of devices and installations for treatment and regeneration of the support fluid (large jobsite surface required) has to be particularly considered.

The installation of slurry walls is almost universally possible in all soil types. Due to economic reasons, it is not recommended for predominantly rock-like sail or rock (except for impermeable embedding).

Slurry wall work can also be carried out where headroom is limited, e.g. under bridges, in halls or under high-voltage lines, starting with a free height of only 6 m.

2.8.1.5 Quality assurance

The quality assurance measures which must be carried out include a multitude of individual measures that have to be newly determined for each project according to the type of execution, method, task definition and soil conditions (geology). In general, the necessary quality assurance measures can be split into the following groups:

1. Measures for the precise determination of soil conditions and soil properties and the controlling of these during execution of the drilling.
2. Measures for the control of the proper execution of the slurry wail work. This includes, for example, control of the wall position, verticality and deviation of the excavation tool and trench depth. Furthermore, regular control of the consistent quality and level of the bentonite suspension, guarantee of the homogenisation of the suspension in the trench, control of the form stability (geometry) of the supported trench as well as the position, vertically and depth of the stop-end structures.
3. Control of the quality of the wall material before installation. This includes, for example, testing of the concrete consistency, the concrete grade test, testing of the suspension (density, flow properties) and/or the plastic concrete for cut-off walls, the quality certificate of steel grade for steel profiles as well as the control of the reinforcement cage (steel grade, cage form and sturdiness when ready for installation, diameter of the steel).
4. Measures for control during installation of the materials. This includes, for example, control of the depth and centricity when inserting the reinforcement cage, control of the length of the concreting pipes (nearly down to the trench bottom), observation of the correct concreting speed and extraction speed of the concreting pipes, the checking of the concrete level (projected upper boundary of the wall) and much more.

T&F Proofs – Not for Distribution

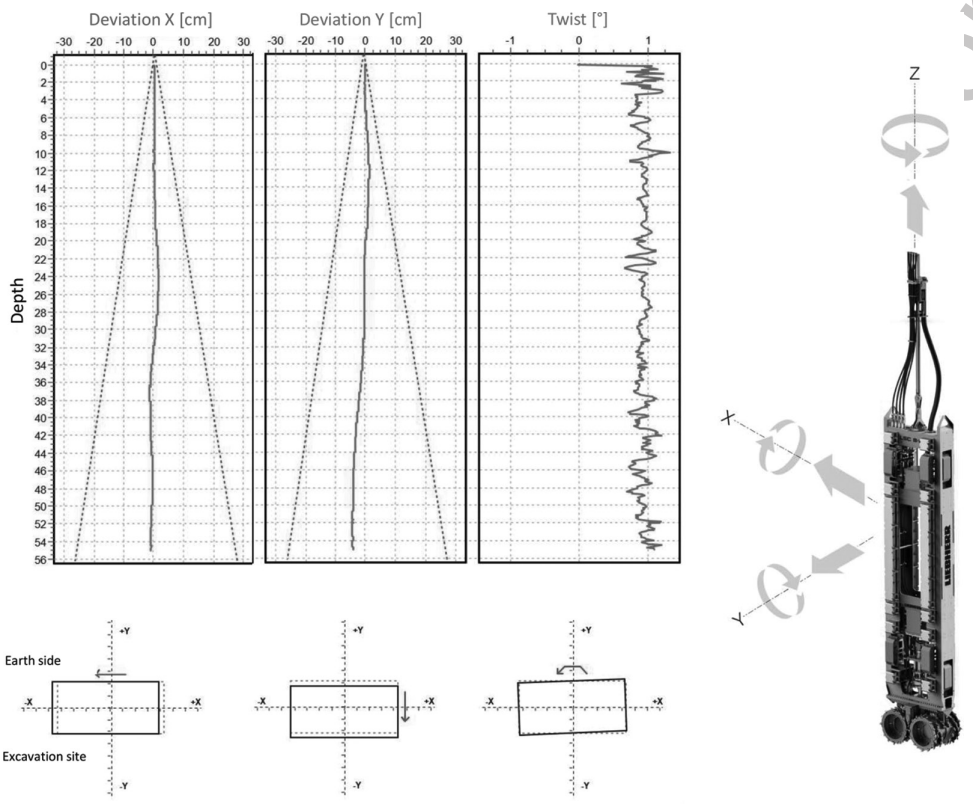

Figure 2.148 PDE by LWN example of operative visualisation and data restitution.

5. Measures for the control of the completed slurry wall. This includes, for example, the control of the wall thickness (core drillings) in the case of reinforced concrete slurry walls which can be accessed from one side and stability tests on concrete core samples taken.

Furthermore, it is important that all quality assurance measures must be formulated in work instructions and logged either by hand or through technical recordings.

For example, an electronic process data recording system (PDE) is incorporated in the LWN carrier machines. All process data which are important for the working process are displayed on the monitor in the cabin and recorded (Figure 2.148).

2.8.2 Drilled piles

Piles executed with different kind of methods (and various diameter) can be frequently seen in tunnelling projects. This chapter is focused on a particular technology which is the secant piles. Pile construction principles, systems and load interactions.

Generally, piles are used to transfer the construction loads through soils with low bearing capacities or through free water into solid subsoil. With the development of

T&F Proofs – Not for Distribution

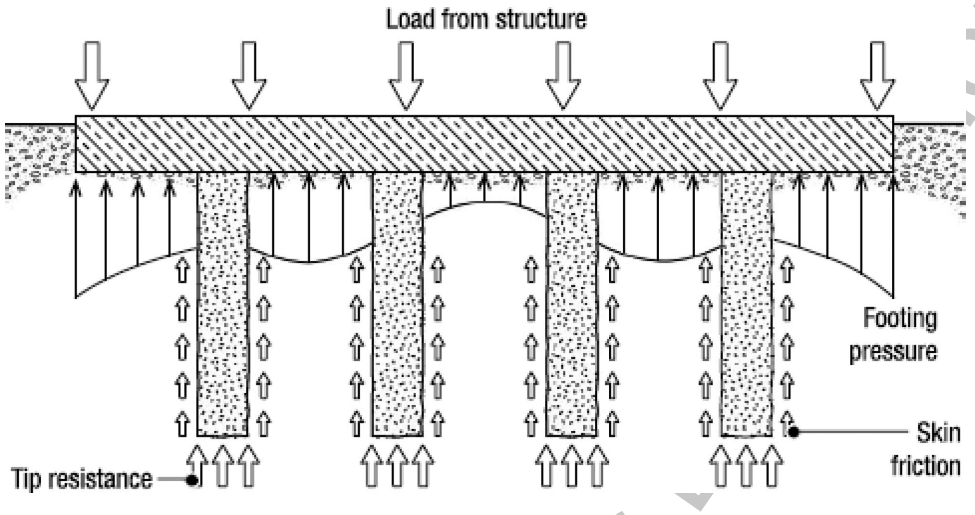

Figure 2.149 Mix effect of load transfer, friction and end bearing. (Courtesy of Liebherr.)

concrete technology in the 20th century, driven piles made of reinforced concrete were implemented to a greater extent. For all these types of piles, the layers of soil are always displaced by the cross section of the pile. The displacement can be affected by impact driving (hammering), vibrating or drilling; in function of the system, it can be a full (as FDP) or a partial (as augered) displacement pile when just a proportion of the soil volume is brought to the surface through rotary drilling. A drilled pile is referred to when the volume of soil equal to the cross section of the pile is brought to the surface. According to the execution method another distinction is made between precast piles and cast-in-place piles (see EN 1536).

Depending on the way in which the pile load (compressive/tensile forces) is distributed in the subsoil, it is differentiated between a friction pile, whereby the load is mainly or solely distributed through skin friction between the pile shaft and the soil, and an end bearing pile. In most cases, the load is distributed through both friction and resistance (Figure 2.149). The information in this chapter applies only to cast-in-place drilled piles made of concrete and reinforced concrete which can be produced using modern and large carrier machines (e.g., by LWN) and duty cycle crawler cranes of the HS series combined with the methods Kelly drilling and double rotary.

The drilling process foreseen that the soil is broken up either by hammering or by rotating using a suitable drilling tool. In most cases, the drilling cuttings are brought to the surface with the aid of a drilling pump bucket, a drilling bucket, an auger or a grab. This method is called dry rotary drilling. In contrast to dry drilling, the excavation of the drilling cuttings in a wash-boring is carried out using a jet flow of air, water or a special drilling fluid (suspension with additives).

A concrete drilled pile is produced with fresh concrete frequently in conjunction with reinforcing steel (cage with longitudinal iron bars enclosed by a helical reinforcement), steel beam profile or steel pipe, inserted along the full pile length or at the top end (head) of the pile. Drilled piles are produced exclusively on-site where they are to be used; a concrete drilled pile is thus a cast-in-place pile.

T&F Proofs - Not for Distribution

For the dry rotary drilling method, a drilling auger or a drilling bucket, which are mounted on a drilling rod, are rotated into the ground. The broken-up soil fills either the flights of the drilling auger or the inside of the drilling bucket. The soil is then excavated by extracting the drilling auger or the drilling bucket with the drilling rod. Due to the type of support applied to the borehole walls, cased pile drillings are differentiated from uncased pile drillings. Generally, the cavity resulting from the excavation of soil must be supported until the pile installation material is introduced. This is to avoid the loosening or decompression of the surrounding layers of soil as far as possible and to prevent the borehole from caving in. This support is predominantly affected by rotating insertion of a steel drill casing, also called (borehole) casing. A cutting shoe with a cutting ring is always fitted to the bottom end of the first casing. Casings are for the most part completely removed while introducing the pile installation material.

Where the soil conditions are sufficiently stable, the casing can either be completely or partially omitted. For example, the section of a pile embedded in rock-like soil is often produced without casing. With the use of a special cutting tool (belling bucket), the contact area of the foot of the pile can be even enlarged (base enlargement); to increase the load-bearing capacity of the pile in the soil, a pile base grouting and/or a pile shaft grouting can also be carried out.

2.8.2.1 Piling with Kelly

The most widely applied technology to produce drilled piles is cased drilling using the Kelly drilling method. A rotary drive both introduce the casing and powers the drilling tool, which is fixed to the Kelly bar, to break up and excavate the soil. The most frequently used drilling tools are an auger or a drilling bucket. The process of installing a drilled pile using the Kelly drilling method includes the following steps:

a. The first casing fitted with a cutting shoe is connected with the casing driver and/or the Kelly bar and drilled into the ground. The next casing sections are interconnected with positive and friction locking and drilled into the ground as deeply as possible. Next, the connection between drill casings and rotary drive is released and the emptying process of the casings starts.
b. The drilling tool is drilled into the ground using crowd and rotary drive and thus fills with soil material. Subsequently, the drilling tool is extracted again together with the Kelly bar, and the excavated soil is emptied. This process is repeated as often as necessary before the next casing or casing section is positioned and installed. In doing so, it is important to observe that the casing is always deeper than the drilling tool in order to avoid breaking up of the soil below the casings.

The insertion and extraction of the drilling tool inside the casing is affected through the rope of the carrier machine's main winch. This rope is attached to the upper end of the inner Kelly via a rope swivel. The whole process of telescoping is controlled through the main winch via the inner Kelly. The described steps are repeated until the projected drilling depth is reached. Subsequently, the pile installation material (e.g., reinforcement and concrete) is introduced into the casing. The extraction of the casing is carried out step by step - one section after the other - using the casing driver, mostly

T&F Proofs – Not for Distribution



Figure 2.150 Use of casing oscillator for a secant pile job in Kelly (a) and grab (b) system.

by simultaneous oscillating and pulling. In special cases, the installation of the casings may require the additional use of a casing oscillator (Figure 2.150).

2.8.2.1.1 UNCASED BOREHOLE WITHOUT SUPPORT FLUID

With suitable soil conditions, the Kelly drilling method can also be applied to produce uncased drillings without support fluids. As a pre-condition, the soil must be free of water, the borehole must be stable throughout its entire length and it must be certain that there is no danger of the borehole wall, even partiality, caving in. The upper part of the borehole must be secured with a protective pipe of at least 2 m length. Its purpose is to guide the drilling tool during insertion and extraction as well as to secure the borehole against possible caving in caused by any outside influences of the drilling work. The drilling process is carried out in the same way as with cased drilling; this is often practised in the case of scheduled embedding of piles in rock or rock-like soils. The possibility of using this method is limited by the soil conditions and the torque of the rotary drive.

2.8.2.1.2 UNCASED BOREHOLE WITH SUPPORT FLUID

This method secures the borehole wall in unstable soil layers against caving in through excess fluid pressure. The support fluid generally used is clay or bentonite suspension or a polymer suspension. The upper part of the borehole must be secured with a suitable protective pipe. It is important to observe that during the whole drilling process and during installation of the pile concrete, the level of support fluid in the borehole never sinks below the lower edge of the protective pipe. This requires a continuous and sufficient supply of support fluid.

T&F Proofs – Not for Distribution

2.8.2.2 *Drilling with single rotary drive*

Decisive progress in the rotary drilling technique was made in the course of industrialisation during the 19th century, where the rotary percussions drilling method was applied in mining and stone extraction as well as in rock blasting operations. Thereby, the first diamond core drillings and roller bit drillings were carried out. The drill cuttings were extracted using air or water and/or drilling fluid. For this kind of drilling work, single rotary drives were always used. Only towards the middle of the 20th century, with the development of powerful rotary drives, it become possible to carry out dry drillings with large diameters using the rotary drilling method. Nowadays, drilling rigs single rotary drives are used to carry out drilling work for the following applications: Kelly drilling, augered piles (continuous flight auger), partial and full displacement piles, predrilling using the auger drilling method, installation of micro-piles, high-pressure injections and uncased mix piles.

The rotary drive is fixed to a rotary table (guide carriage), which is mounted on a leader (drilling mast and drilling leader) and can be slid vertically. This leader is firmly attached to the carrier machine. The carriage with rotary drive is pulled down by rope crowd. A single rotary drive operator either a longer auger or a drilling rig with a drilling tool mounted at the bottom to loosen and extract ground material. When using an auger, it is firmly coupled with the rotary drive. Thus, the torque and crowd force are transferred directly to the auger and/or the rotary drilling tool. However, this also means that - unlike the Kelly drilling method - the achievable drilling depth is determined by the leader length and the dimensions of the rotary drive. This type of application requires the use of modern drilling rigs, type LWN class LB, with rope crowd system as only this feature makes it possible to utilise the entire length of the leader. For producing augered piles as well as partial and full displacement piles, a single rotary drive with hollow chuck and Kelly drive adapter is applied as for Kelly drilling. A so-called "concreting short Kelly" is inserted into this rotary drive and concrete is pumped through it into the hollow stem of the auger. This rotary drive also allows for increasing the drilling depth as the auger can be fitted with a (long) Kelly extension.

The main advantages of drilling with single rotary drive using a continuous drilling rod or auger include direct power transmission from the rotary drive to the drilling tool, less noise production than with Kelly drilling, less material wear of the drilling tool than with double rotary drilling, continuous drilling process compared to intermittent drilling, better drilling performance achievable than with Kelly drilling.

The limits arise, on the one hand, from the maximum possible drilling depths that can be achieved (also using suitable clamping devices able to add a certain number of rods) with the drilling diameters used and the drilling tools applied based on the soil conditions, and on the other hand from the size (length, width and height) of the equipment used, the pull force of the carrier machine as well as the achievable torque. When producing small boreholes of up to 300 mm diameter using a rotary drive with hollow chuck and clamping devices, it is possible to achieve much greater drilling depths.

2.8.2.3 *Double rotary drilling*

The double rotary drilling process combines uncased auger drilling with cased drilling. The process gets its name from the two rotary drives ("double rotary drive")

T&F Proofs – Not for Distribution

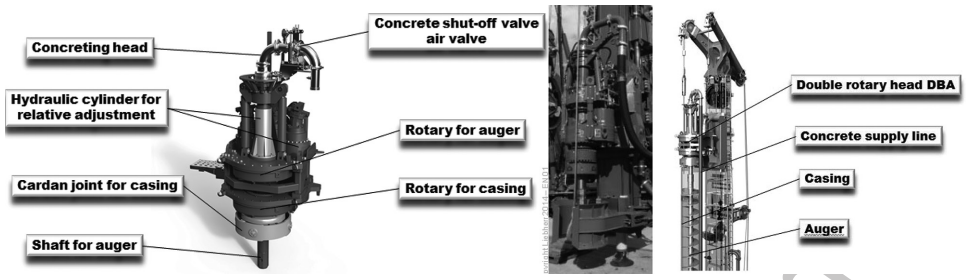

Figure 2.151 Double rotary functioning principle and components.

mounted on a common carriage, one after the other in the drilling axis, whereby an inner drill column, preferably a long auger, and an outer borehole casing are driven independently of one another (Figure 2.151).

The advantages of the double rotary drilling method are mainly:

- thanks to the borehole casing, the process can be carried out in virtually any soil;
- thanks to the displacement cylinder, the distance between the upper rotary drive (drive of the inner auger) and the lower rotary drive (drive of the casing) can be varied. Consequently, the position of the end of the pipe shoe relative to the auger starter can be adjusted (normally maximum adjustment 500 mm). This means that depending on the soil composition the casing can run ahead of the auger to prevent cave-in, or the auger can drill ahead as a pilot;
- short operating time thanks to high efficiency;
- highly economical process;
- drilling does not have to be carried out with water injection;
- high drilling accuracy, thanks to opposed rotation of drilling tool and casing;
- low noise pollution;

From the operative point of view:

- with upcoming groundwater drilling with excess water pressure is not necessary. Inside the casing, the auger, which is filled with drilling cuttings and reaches down to the bottom of the casing, prevents a possible break-up of the bottom of the borehole;
- the hollow stem of the auger must remain closed (cover) until the start of concreting to ensure that neither water near soil (e.g., mud) can enter into it;
- the concrete is not filled in through the hollow stem until the final depth is reached;
- when the casing and the auger are extracted, the resulting cavity is filled with concrete;
- during concreting and extraction of the casing and the auger, they must not be rotated but moved only at low speed in the same direction as they were driven in.

This method is suitable to produce drilled piles in all types of soil which can be broken using an auger without chisel work. The limits arise on the one hand from the maximum possible drilling depths that can be achieved with the drilling diameters

T&F Proofs — Not for Distribution

used based on the soil conditions, and on the other hand from the size (length, width, height) of the equipment used and the pull force of the carrier machine as well as the achievable torque.

Double rotary drilling represents another possible application in addition to the standard applications of Kelly drilling and auger drilling for modern, type LWN LB class, drilling rigs. As the efficiency of the method depends above all on the engine power of the carrier machine, the rigs of the LWN LRB series are more suitable for this type of application.

2.8.2.3.1 STANDARD METHOD

In the double rotary drilling method for producing piles, as already reported, an outer casing and an inner auger (hollow auger) are driven in counter-rotation by two independent rotary drives which are coupled to each other. The outer casing provides support for the ground, while the auger removes drilling cuttings up through the casing. Once the final depth is reached, a concrete pump is used to poor concrete via the hollow stem of the auger inside the outer casing to the bottom of the borehole. More concrete is pumped in under simultaneous extraction of the casing, more the auger will be filled with drilling cuttings. The extraction speed is selected as a function of the concrete quantity and pressure. In a further step, a reinforcement cage can then be inserted into the column of liquid concrete.

2.8.2.3.2 SPECIAL METHOD

Pile production using the double rotary method can also be modified. Once the final depth has been reached, the outer casing is disconnected from the rotary drive and only the auger filled with drilling cuttings is extracted. The casing initially remains in the ground. The auger is emptied and positioned in a separately installed bucket borehole. The reinforcement is then inserted within the casing. Subsequently the borehole is filled with concrete and the casing is extracted. Before drilling the next hole, the extracted casing is slid over the auger which is positioned in the bucket borehole, and the upper rotary drive is reconnected to the auger. For this method, it is advantageous if several drill casings can be used at the same time.

2.8.2.3.3 DOUBLE ROTARY ("FRONT OF THE WALL") DRILLED PILE

The double rotary (FoWor "Front-of-Wall") method was developed in order to be able to produce drilled piles directly in front of the walls of existing buildings on inner-city construction projects. Here, a special double rotary drive is used (Figure 2.152). When producing a double rotary pile, the smallest possible distance in front or an existing building is around 5–10 cm, measured from the outer edge of the pile to the upright of the building (any protrusions in the building at higher levels must be taken into consideration).

The production of a double rotary pile is carried out in the same way as a pile using the double rotary method. For small diameter drilled piles, an auger without hollow stem is used and for large diameter drilled piles a hollow auger with a hollow stem. Pile walls with a small diameter, up to ~400 mm, in front of existing buildings (lining

T&F Proofs – Not for Distribution



Figure 2.152 FoW system (a and b) and secant piles wall executed (c).

or foundation works) should preferably be carried out using the special method mentioned above. Double rotary piles can also be produced using a hollow auger as described above in the standard method. This approach is however not suitable for producing piles in front of existing buildings for the purpose of supporting them due to the danger of loosening soil.

2.8.2.4 Bored pile walls

In bored pile walls, the bored piles are arranged directly next to each other. Reinforced concrete bored pile walls can resist large bending moments in addition to vertical loads. Furthermore, they not only resist the loading from the structure but also resist the prevailing earth pressure and, depending on the type or process, also water pressure. Due to their high bending stiffness, bored pile walls are a support construction with very low deformation suitable for the installation of foundation pit retaining walls, for retaining changes of level in the terrain, as well as a wall construction for support walls. They are normally installed vertically but can also be installed with a slight inclination to resist horizontal loading.

There are three different types of systems for the installation of pile walls: the contiguous pile wall, the tangential pile wall, and the secant pile wall, see Figure 2.153.

In a contiguous pile wall (a), only the structurally necessary number of reinforced piles is installed, so that the piles have spaces between them. The spaces between the piles are filled as excavation proceeds with shotcrete, sometimes also in-situ poured concrete or timber. Shotcrete support can either be flat or with an arch. The seepage water behind the contiguous pile wall is collected in filter elements and drained. Contiguous pile walls are used to secure transport routes and in general for light construction when there is no groundwater.

A tangential pile wall (b) consists of bored piles placed directly next to each other. The clear spacing between the individual piles is, depending on the practicalities of the process and the soil conditions, between 2 and 8 cm. Tangential pile walls are mostly used where there is no groundwater and only structural loads and earth pressure have to be resisted. Seepage water can be collected in filter elements and drained. In case a tangential pile wall has to be secured with grouted anchors, the back-anchoring is normally installed between the piles. In the installation of tangential pile walls, care must be taken to drill accurately since a pile running off in the wall axis would lead to undesirable gaps in the pile wall and problems cutting into the adjacent reinforced pile.

T&F Proofs – Not for Distribution

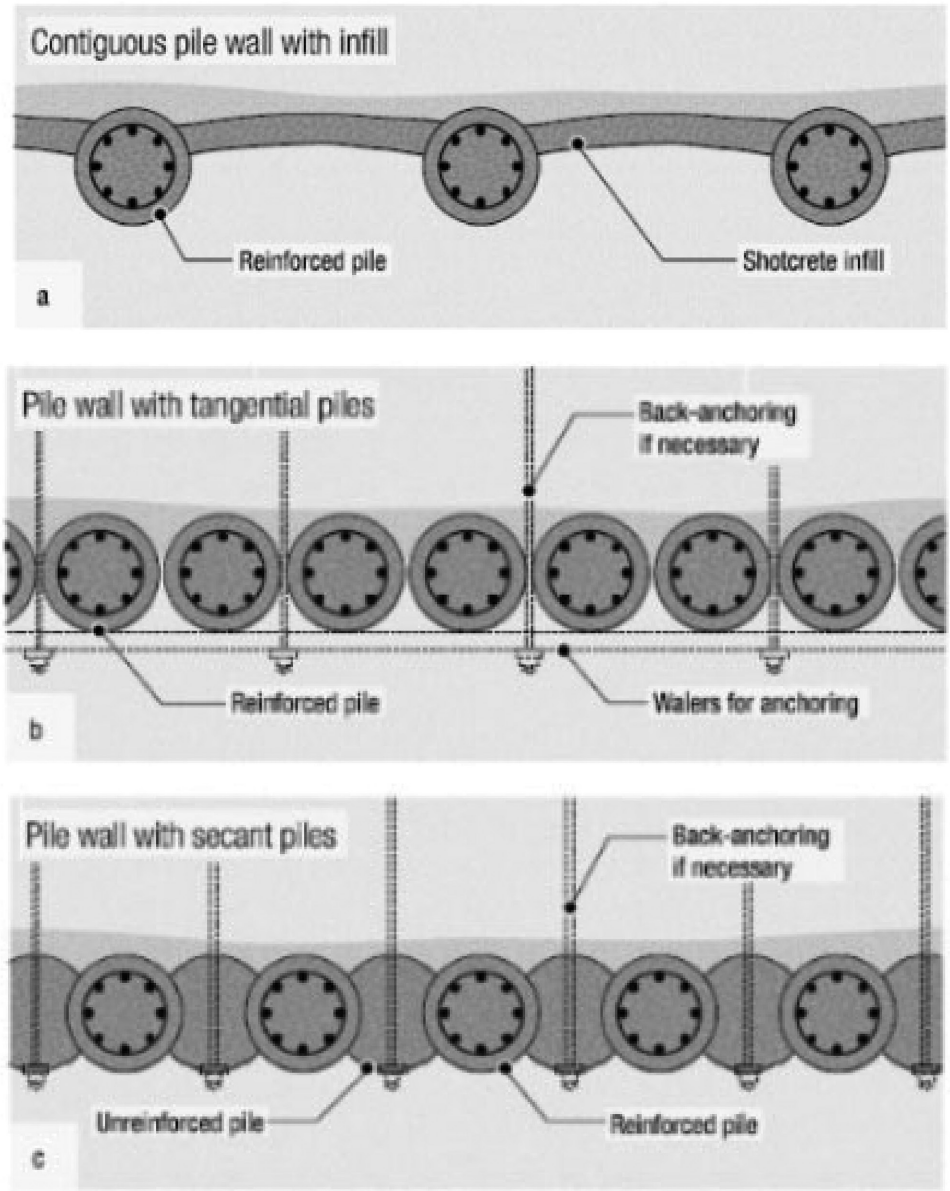

AU: Please provide the better quality image.

Figure 2.153 Bored pile walls; contiguous (a), tangential (b), secant (c).

2.8.2.5 Secant bored pile walls

In a secant pile wall, see Figure 2.153c, the bored piles are placed so that the adjacent piles overlap. Therefore, the pile wall can in addition to structural loads and earth pressure also resist and transfer water pressure. A secant pile wall thus enables

Taylor & Francis

a waterproof (also technically water pressure-tight) retaining wall for a foundation pit. The installation of a secant pile wall is carried out in a back-step method. In a first working step, unreinforced primary piles are concreted, then the secondary piles are drilled, cutting into the previously concreted primary piles. These secondary piles can be reinforced or unreinforced. The sequence of bored pile installation and the resulting axial spacing of the bored piles to each other must be selected so that no damage can occur to adjacent bored piles. For this purpose, the EN 1536 requires a time-dependent (4 hours) spacing limitation of four times the diameter or at least 2.0 m. This means for shorter piles with smaller diameters that as a result of quicker pile installation, the classic back-step method cannot always be used due to the time-related spacing limitation. The secondary piles also have to be completed in a limited time frame after the primary piles. On the one hand, the primary pile may only be cut into after the concrete has reached a certain initial strength, otherwise the concrete could run out and soil residues could be enclosed when the pile is cut into. On the other hand, the secondary pile has to be installed early enough in order to simplify cutting into the concrete before it has completely hardened.

The initial strength of the concrete of two adjacent primary piles should also be about the same to exclude the secondary pile running off the vertical axis. Since primary piles mostly only serve as infill and to ease cutting into them, they can be made of a lower quality concrete; in this case, particular attention should be paid to a long hardening time through the use of appropriate cement or the addition of additives and admixtures.

The normal arrangement of piles in a secant pile wall is alternately one unreinforced and one reinforced pile. This arrangement is called the 1–1 system. Under the classic sequence, at least three primary piles are first installed and then the reinforced secondary piles between them. Thereafter the primary piles are always installed first followed by the secondary piles. Figure 2.154a shows an example of a possible step sequence for a secant pile wall with 1,500 mm diameter piles.

If only small horizontal loads are to be expected under the prevailing conditions, it can be sufficient to only reinforce every third pile, which results in another possible installation sequence, called the 1–2–1 system. First the unreinforced primary piles nos. 1, 4, 7 and 10 are installed. The next step is to install the unreinforced secondary piles nos. 2, 5 and 8. The reinforced secondary piles nos. 3, 6 and 9 are installed in the third step, see Figure 2.154b.

In contrast to this arrangement, bored pile walls are also constructed where it suffices to reinforce only every fourth pile (1–3–1 system). In this case, the construction process is a modified back-step method. First, considering the spacing rule, the unreinforced primary piles nos. 1, 5, 9 and 13 are installed consecutively. Then follow the

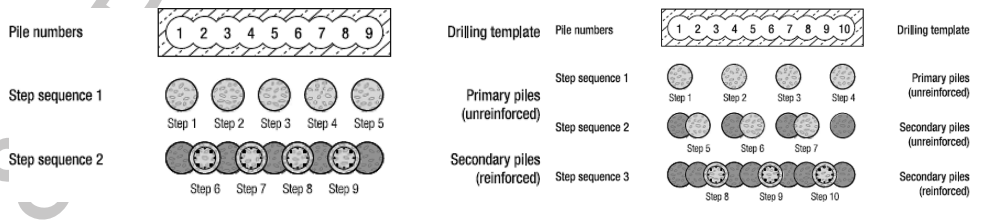

Figure 2.154 Step sequence; 1–1 (a) and 1–2–1 (b).

Taylor & Francis – Not for Distribution

primary piles nos. 3, 7 and 11 for this section length. In the third step, the intermediate unreinforced secondary piles nos. 2, 6 and 10 are installed, each cutting into the previously concreted primary piles on both sides. Since with the 1–3–1 system every fourth pile is reinforced, the fourth step entails the installation of the reinforced secondary piles nos. 4, 8 and 12, which also cut into the previously concreted primary piles on each side.

In principle, the rule is that first at least three or more primary piles have to be installed (also depending on working progress) and then the associated reinforced secondary piles. The number of successively installed primary piles depends, in addition to the drilling process and the drilling progress, on the selected concrete grade and thus the hardening behaviour of the concrete. Normally the secondary piles are installed after 1–3 days depending on the drilling diameter and the drilling depth; in any case the cutting out of the secondary pile should be possible without considerable additional measures. If work is interrupted for a longer period or if a retaining wall is extended at a later stage, the first and/or the last pile is to be constructed as a secondary pile. This is made as a gravel pile, which means that after drilling, it is not filled with concrete but with gravel or poor concrete. The gravel pile is emptied again by drilling after the interruption of work and filled with concrete. Depending on the type of connection (bored pile, sheet pile wall, soldier pile wall), a reinforcement cage or a connection profile can be inserted.

When a bored pile wall is secured with grouted anchors, these are normally used in combination with systems to distribute the load or a stiff structure (head beam) on the unreinforced piles; if such systems are not used, then the anchors should be drilled through the reinforced piles. Otherwise, an additional statical verification is necessary for the unreinforced piles.

Secant bored pile walls are normally constructed with 620–1,500 mm diameter piles. The depth of piles installed with casings is limited by the torque provided by the carrier machine or the rotary drive. The recommended maximum achievable drilling depth is about 25–30 m due also to the accuracy requirements for the maintenance of verticality.

2.8.2.5.1 DEVIATION AND PILES DEPTH

According to EN 1536, the requirement for single piles is a maximum deviation from the vertical of 2.0% of the pile depth. Waterproof secant pile walls have to be constructed considerably more accurately, depending on the required drilled depth. The permissible deviation from the vertical is in purely mathematical terms independent of the drilled pile diameter and depends — assuming a constant inclination down the length of the pile — only on the pile depth. To ensure, given a specified drilling tolerance, that two piles in a bored pile wall do not diverge, a minimum overlap has to be maintained at the drilling starting point. This has to be greater than the total inclination deviation of two adjacent piles in order to ensure that they still overlap at the pile foot, see Figure 2.155a. Due to the process, the deeper a secant pile wall is installed, the larger the deviation in inclination at the pile foot can be. This means that the overlap at the pile starting point should be enlarged. Usual overlaps in practice are in the range between 10% and 20% of pile diameter. The relationship between the recommended maximum drilling depth, the installation tolerance and the drilling diameter is shown in Figure 2.155b. In the diagram, the possible drilling depths are given for various

T&F Proofs — Not for Distribution

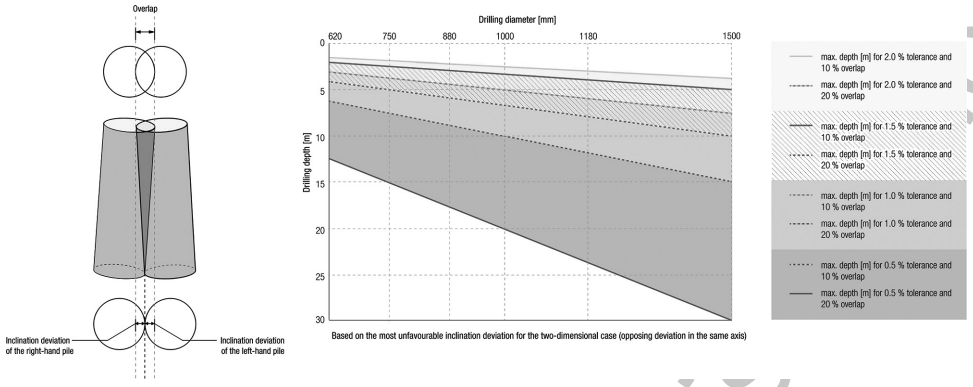

Figure 2.155 Deviation; overlap while drilling (a) and recommended maximum drilling depth (b). (Courtesy of Liebherr.)

drilling diameters depending on the specified tolerance with usual overlaps. The calculations, on which the diagram is based, consider the least favourable deviation for the two-dimensional case (opposing deviation in the same axis), see again Figure 2.155a.

The ground conditions are also to be considered in the drilling tolerances. These may not be possible to ensure in difficult ground conditions. The tolerances given here do not consider any deviation at the starting point. In practice, it is very rare for two adjacent piles to deviate in opposing directions. Therefore, deeper pile wall depths are mostly installed with the same overlaps and the same tolerances as already described. In Figure 2.155b is presented a table which gives standard values for the usual axial spacing and drilling depths for various pile diameters for the installation of a bored pile wall. The axial spacing of the bored piles is the result of the selection of an overlap and is used for the setting out of the drilling points.

The process of construction of a retaining system is often changed after checking the local conditions, for example a diaphragm wall is often used instead of a secant pile wall for great wall depths. It is however also possible to install very deep secant pile walls with the common drilling diameters of 620–1,500 mm. This is undertaken using a casing rotator in combination with a drilling rig. With a casing rotator, adjustable pressing control is possible, enabling more gentle and precise installation of a casing string. Through the continuous 360° rotation, the deviation of long casing strings is minimised, and the best possible vertical precision can be achieved. For this purpose, special casing rotators with low construction height have been developed, which are especially suitable for the installation of secant pile walls. Casing rotators are however independent machines, so the machinery costs are higher in combination with a drilling rig for pile wall installation.

2.8.2.5.2 WATERTIGHTNESS AND EXCAVATION SYSTEMS

Bored pile walls are, due to the practicalities of the process, never completely waterproof. At the intersection of adjacent piles, drill cuttings can be enclosed during drilling due to the overlap, which can harden with the cement paste of the freshly concreted

T&F Proofs – Not for Distribution

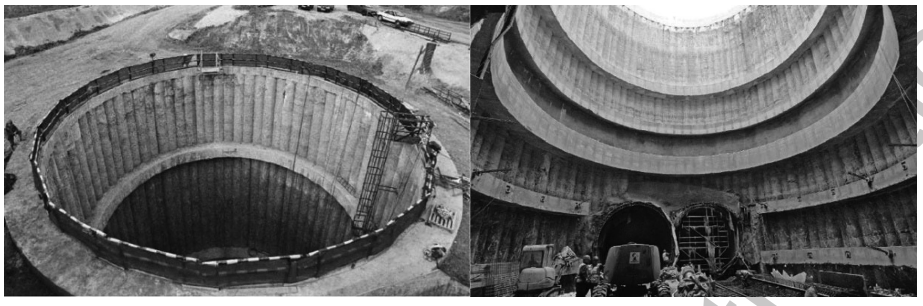

Figure 2.156 Secant piles shaft (a) and mixed secant and tangential piles shaft (b).

pile so that the joint initially seems waterproof. However, just slight horizontal wall deformation, such as may occur when the anchors are stretched or excavation is continued inside the retaining wall, can destroy this bond of cuttings and cement paste. If the head of water behind the wall is large, this can lead to leaks through the joints. This slight water ingress can be stopped by subsequent sealing measures. Damp areas of a pile wall or individual wet areas in the form of isolated water drops ("sweating pearls") are not a great problem. When used temporarily as a foundation pit enclosure, pile walls are thus sufficiently waterproof. For higher- quality structures or when a pile wall is used permanently as an external wall, the use of a two-shell construction is recommended.

For the installation of secant and tangential pile walls, all bored pile systems with a full casing are in principle suitable. In practice, however, only the Kelly drilling process, the double rotary drilling process as well as the cased DTH drilling process are used. The grab drilling process is also used in exceptional cases for the installation of bored pile walls. Uncased continuous flight auger drilling is only suitable for shorter pile walls under very favourable ground conditions, like for example in softer soils, and can in these cases be carried out with secant or tangential piles.

Partial and full displacement drilling processes are unsuitable for the installation of secant and tangential pile walls; the soil displacement into the surrounding ground would lead to damage to the already concreted adjacent piles. While, for contiguous pile walls, both the fully cased drilling processes and augered piles are suitable as partial and full displacement piles, as long as the spacing of these piles from each other is sufficiently large. In Figure 2.156 can be seen n. 2 shafts executed for metro works in Prague; average diameter 24 m, piles length 35 m, piles diameter 1,180 mm, c/c distance 885 mm, in sequence: anthropic deposits, sandstone, claystone, quartzite, sandstone, silty shale, GLW at a depth of 20.4 m in the sandstone layers.

2.8.2.5.3 DRILLING TEMPLATES

To maintain the drilling points and thus the exact spacing of the piles from each other within the specified tolerances, drilling templates are to be used for tangential and secant pile walls. These serve to guide the casing at the drilling point and have to be precisely set out in order to position the pile exactly. Drilling templates are normally

T&F Proofs – Not for Distribution

made of reinforced concrete on site and at the required location. In rare cases, drilling templates made of precast concrete elements are used. The layout of the drilling template is based on the requirements of the bored pile wall in terms of diameter, wall depth and overlap. Depending on the precise requirements, they should have a height of about 30 cm for smaller and at least 50 cm for larger pile diameters. Formwork for drilling templates is assembled of prefabricated steel, timber or polystyrene elements and fixed. Then the templates are concreted in-situ. After the concrete has hardened, the formwork can be removed without problems from the concreted drilling template. Drilling templates are normally broken out and disposed after the pile wall has been completed.

2.8.2.6 Quality assurance

The quality assurance measures rather have a decisive influence on the proper execution of all types of drilled pile production. They cover a multitude of individual measures, which according to the type of execution, method, task definition and soil conditions, need to be met. For a general overview, the necessary quality assurance measures can be split into the following groups:

1. Measures for the precise determination of soil conditions and soil properties and the contriving of these during execution of the drilling.
2. Measures for the control of the proper execution of the drilling work. This includes, for example, control of the location (drilling point), inclination (verticality), depth and constant cross section (diameter) of the borehole, control of the casing being deeper than the excavation, observation of the correct extraction speed of the drilling tool as well as the control of the stability of the borehole up to the installation of the pile material.
3. Control of the quality of the pile material before installation. This includes, for example, testing of the concrete consistency, the concrete grade test, the quality certificate of steel grade for steel profiles as well as the control of the reinforcement cage (steel grade, cage form and sturdiness when ready for installation, diameter of the steel).
4. Measures for control during the installation of the materials. This includes, for example, control of the depth and centricity when inserting the reinforcement cage, control of the submersion depth of the concrete delivery pipe in the fresh concrete when installing concrete with groundwater in the borehole, the observation of the correct extraction speed of the casings to avoid defects in the concrete, the checking of the concrete level (necessary excess concrete) and much more.
5. Measures for the control of the completed pile. This includes, for example, the execution of load tests, dynamic integrity checks, stability tests on concrete core samples taken as well as the control of the reinforcement projecting from the pile head.

Furthermore, it is important that all quality assurance measures must be formulated in work instructions and logged either by hand or through technical recordings. This kind of system is fundamental in order to verify the quality of the piles produced by double rotary drilling (standard method) e.g. the data for drilling depth, speed of

T&F Proofs – Not for Distribution

rotation, extraction speed during concreting and the concrete pressure (recorded, displayed and saved online in the machine), in order to check the continuity of the piles; monitoring of the pile production also includes control of continuous concrete supply, continuous concrete pressure, extraction speed and auger rotation.

ACKNOWLEDGEMENT

A. Cresto, B. Matheson, F. De Villneuve, F. Gabriel and the companies Herrenknecht A.G. and Edilmac S.r.l. are gratefully acknowledged for providing valuable material used in this chapter.

AUTHORSHIP CONTRIBUTION STATEMENT

The chapter was developed as follows. Grasso: chapter coordination and Chapter 1. Cardu & Martinelli: Chapter 2; Cardu: Chapter 3; Bringiotti & Nicastro: Section 3.1.3 & Section 4.2.1; Peinsitt: Section 4.1; Santarelli: Section 4.2.2; Concilia & Brino: Chapter 5; Lavagno & Brino: Chapter 6; Todaro, Peila & Carigi: Section 6.5.1; Todaro: Section 6.5.2; Peila, Bringiotti & Todaro: Chapter 7; Manassero: Section 7.1; Bechter, Bringiotti & Nicastro: Chapter 8. All the authors contributed to chapter review. The editing was managed by Cotugno.

AU: The most of the references (above 100) are not cited in the text. Please cite those reference in the text or can we change the section heading from 'References' to 'Bibliography'. Please check and confirm.

REFERENCES

Acaroglu, O., Ozdemir, L. & Asbury, B. (2007) A fuzzy logic model to predict specific energy requirement for TBM performance prediction. *Tunnelling and Underground Space Technology*, 23(5), 600–608.

AFTES. Working Group no. 4. (2005) Recommendations on choosing mechanized tunnelling techniques. Tunnels et Ouvrages Souterrains, Hors-Serie No. 1, 137–163.

Alber, M. (1996) Prediction of penetration and utilization for hard rock TBMs. In: *ISRM-EUROCK 1996: Prediction and Performance in Rock Mechanics and Rock Engineering: Proceedings of the International Symposium of the ISRM-EUROCK 96*, 2–5 September 1996, Turin, Italy.

Alber, M. (2008a) An integrated approach to penetration, advance rates and disc cutter wear for hard rock TBM drives. *Geomechanik und Tunnelbau*, 1, 29–37.

Alber, M. (2008b) Stress dependency of the Cerchar abrasivity index (CAI) and its effects on wear of selected rock cutting tools. *Tunnelling and Underground Space Technology*, 23, 351–359.

Alvarez Grima, M., Bruines, P.A. & Verhoeh, P.N.W. (2000) Modeling tunnel boring machine performance by Neuro-Fuzzy methods. *Tunnelling and Underground Space Technology*, 15(3), 259–269.

Anagnostou, G. (2014). Muir wood lecture: Some critical aspects of subaqueous tunnelling. [lecture]. *ITA-AITES World Tunnel Congress 2014*, Iguassu, Brazil.

ASTM (2020) C143/C14.3M-20. Standard test method for slump of hydraulic-cement concrete, West Conshohocken (PA, USA).

Ates, U., Bilgin, N. & Copur, H. (2014) Estimating torque, thrust and other design parameters of different type TBMs with some criticism to TBMs used in Turkish tunneling projects. *Tunnelling and Underground Space Technology*, 40, 46–63.

T&F Proofs – Not for Distribution

Atlas Diesel – Sandvik (1953) *Manuel de creusement au rocher*. Fraenkel Ed., Stockholm.
Autuori, S., Nicotera, M.V., Russo, G., Di Luccio, A., & Molisso, G. (2019) Effects of construction and demolition of a TBM excavated tunnel inside existing diaphragm walls. In: Peila, D., Viggiani, G. & Celestino, T. (eds.) *Tunnels and Underground Cities: Engineering and Innovation Meet Archaeology, Architecture and Art*. CRC Press, Boca Raton, FL. doi: 10.1201/9780429424441-561.12-0164-9.
Azari, B., Mirlatifi, S., Buys, H. & Cullen, I. (2020) Geotechnical challenges for construction of diaphragm walls and foundation of Sydney's tallest building, crown Sydney hotel resort. *Australian Geomechanics Journal*, 55.
Balci, C. & Bilgin, N. (2007) Correlative study of linear small and full-scale rock cutting test to select mechanized excavation machine. *International Journal of Rock Mechanics and Mining Sciences*, 44, 468–476.
Barbero, M., Peila, D., Picchio, A., Chieregato, A., Bozza, F. & Mignelli, C. (2012). Procedura sperimentale per la valutazione dell'effetto del condizionamento del terreno sull'abrasione degli utensili nello scavo con EPB. *Geoingegneria Ambientale e Mineraria*, 135, 13–19.
Barla, G. & Pelizza, S. (2000) TBM tunnelling in difficult ground conditions. *GeoEng2000: An International Conference on Geotechnical & Geological Engineering: Proceeding of GeoEng2000*, 19–24 November 2000, Melbourne, Australia.
Barton, N. (2000) *TBM Tunnelling in Jointed and Faulted Rock*. Balkema, Rotterdam.
Berta, G. (1989) *L'esplosivo, Strumento di Lavoro*. Italesplosivi, Milan, Italy.
Bieniawski, Z.T. (1989) *Engineering Rock Mass Classifications*. Wiley, New York.
Bieniawski, Z.T., Celada, B. & Galera, J.M. (2006) Rock Mass Excavability (RME) indicator: New way to selecting the optimum tunnel construction method. In: *ITA-AITES 2006: Safety in the Underground Space: Proceedings of the ITA-AITES 2006 World Tunnel Congress and 32nd ITA General Assembly*, 22–27 April 2006, Seoul, Korea.
Bilgin, N. (1989) *Applied Rock Cutting Mechanics for Civil and Mining Engineers*. Birsen, Istanbul.
Bilgin, N., Dincer, T., Copur, H. & Erdogan, M. (2004) Some geological and geotechnical factors affecting the performance of a roadheader in an inclined tunnel. *Tunnelling and Underground Space Technology*, 19(6), 629–636.
Bilgin, N., Demircin, M.A., Copur, H., Balci, C., Tuncdemir., H. & Akcin, N. (2006) Dominant rock properties affecting the performance of conical picks and the comparison of some experimental and theoretical results. *International Journal of Rock Mechanics and Mining Sciences*, 43, 139–156.
Bilgin, N., Copur, H. & Balci, C. (2014) *Mechanical Excavation and Civil Industries*. CRC Press Publishing, Boca Raton, FL.
Bilgin, N., Copur, H. & Balci, C. (2016) *TBM Excavation in Difficult Ground Conditions. Case Studies from Turkey*. Erns & Sons Publishing, Boca Raton, FL.
Bilotta, E. & Russo, G. (2010) Use of a line of piles to prevent damages induced by tunnel excavation. *Journal of Geotechnical and Geoenvironmental Engineering*, 137, 254–62. doi: 10.1061/(ASCE)GT.1943-5606.0000426.
Blindheim, O.T. (1979) Failure mechanisms under disc cutters. *Rock Mechanics Conference*, Oslo.
Borio, L. & Peila, D. (2010) Study of the permeability of foam conditioned soils with laboratory tests. *American Journal of Environmental Sciences*, 6, 365–370.
Borio, L. & Peila, D. (2011) Laboratory test for EPB tunnelling assessment: Results of test campaign on two different granular soils. *Gospodarka Surowcami Mineralnymi*, 27, 85–100.
Boyd, R. (1987) Performance an experimental development of the mobile miner at Mount Isa. In: *Proceedings of the 1987 Rapid Excavation and Tunneling Conference*, New Orleans, LA, 14–18 June 1987, Vol. 2, pp. 747–768.
Bringiotti, M. (2003a) *Consolidamenti e Fondazioni*. Edizioni Pei, Parma, Italy.
Bringiotti, M. (2003b) *Guida al Tunnelling – l'evoluzione e la sfida*. Edizioni PEI, Parma, Italy.

AU: Please provide the page range for reference 'Azari et al. (2020)'.

T&F Proofs – Not for Distribution

Bringiotti, M. (2009) Robodrill: Perforazione automatica e sua gestione. Alcune esperienze in Italia ed all'estero. In: *Proceedings of the Conference "Le gallerie stradali ed autostradali - Innovazione e tradizione"*, Viatec 2009-5 March 2009, Bolzano, Italy, SIG, Milan.

Bringiotti, M. (2010) *Geotecnica & Macchine da Perforazione*. Edizioni Pei, Parma, Italy.

Bringiotti, M. & Bechter, S. (2018) Job site reports related to deep FDP, big diameter CSP and ring vibrator executed at the limits by the same LWN drill rig. In: *International Conference on Deep Foundations and Ground Improvement: Urbanisation and Infrastructure Development: Future Challenges, DFI EFFC*, 5–8 June 2018, Rome, Italy.

Bringiotti, M. Bechter, S. & Franco, G. (2019) Motivations to swap from trench cutter to hydraulic grab: Case histories from Florence, Rome and Milan. In: Peila, D., Viggiani, G. & Tarcisio, C. (eds.) *World Tunnel Congress 2019: Tunnels and Underground Cities: Engineering and Innovation Meet Archaeology, Architecture and Art, Proceedings of the ITA World Tunnel Congress,* 3–9 May 2020, Naples, Italy. Taylor & Francis, London.

Bruland, A. (1998a) Hard rock tunnel boring, NTNU Trondheim Norwegian University of Sciences and Technology, PhD thesis.

Bruland, A. (1998b) Prediction model for performance and cost. *Norwegian TBM Tunnelling*, 11, 150–158.

BTS (2005) Closed-face tunnelling machines and ground stability. *A Guideline for Best Practice*. ICE, Thomas Telford, London.

Budach, C. & Thewes, M. (2015). Application ranges of EPB shields in coarse ground based on laboratory research. *Tunnelling and Underground Space Technology,* 50, 296–304.

Burland, J., Brown, M., Skinner, H.D., Chapman, T. (2012) *ICE Manual of Geotechnical Engineering*. doi: 10.1680/moge.57074.0001.

Càmara, R.J. (2018) Use of two-component mortar in the precast lining backfilling of mechanized tunnels in rock formations. In: *ITA-AITES WTC 2018: Proceedings of the World Tunnel Congress 2018*, April 20–26, Dubai.

Carigi, A., Luciani, A., Todaro, C., Martinelli, D. & Peila, D. (2020). Influence of conditioning on the behaviour of alluvial soils with cobbles. *Tunnelling and Underground Space Technology*, 96, 103225.

Cassinelli, F., Cina, S., Innaurato, N., Mancini, R. & Sampaolo A. (1982) Power consumption and metal wear in tunnel-boring machines: analysis of tunnel-boring operation in hard rock. In: *Tunnelling '82: Proceedings of International Symposium Tunnelling' 82*, Brighton, UK, IMM, London, pp. 73–81.

CEN (1999). EN 1536. Execution of special geotechnical work: Bored piles, European Committee for Standardization.

CEN (2000). EN 1538. Execution of special geotechnical works: Diaphragm walls, European Committee for Standardization.

CEN (2019). EN 12350-2. Testing fresh concrete. Slump test. Bruxelles, European Committee for Standardization.

Choy, C.K., Standing, J.R. & Mairi, R.J. (2007) Stability of a loaded pile adjacent to a slurry-supported trench. *Geotechnique*, 57. doi: 10.1680/geot.2007.57.10.807.

Comodromos, E.M., Papadopoulou, M.C. & Konstantinidis, G.K. (2013) Effects from diaphragm wall installation to surrounding soil and adjacent buildings. *Computers and Geotechnics*, 53. doi: 10.1016/j.compgeo.2013.05.003.

Concilia, M. (2008) Full face tunnel boring machines for tunnelling through rock masses. [Lecture] Politecnico di Torino: Post Graduate Master in Tunnelling and TBM, 8–9 February 2008.

Copur, H., Bilgin, N., Balci, C., Tumac, D., Avunduk, E. & Shaterpour-Mamaghani, A. (2016) Full-scale linear cutting experiments with a conical cutter for simulating different cutting patterns, In: *ISRM-EUROCK 2016, Proceedings of the ISRM International Symposium - EUROCK 2016*, Ürgüp, Turkey, 29–31 August 2016.

Dahl, F., Nilsen, B., Holzhäuser, J., & Raleigh, P. (2007) New test methodology for estimating the abrasiveness of soils for TBM tunnelling, In: Traylor, M.T. & Townsend, J.W. (Eds), *Rapid*

T&F Proofs – Not for Distribution

Excavation and Tunneling Conference 2007: Proceedings of the Rapid Excavation and Tunneling Conference 2007, Toronto, June 2007, SME, Englewood, CO.

Dahraand, A. (1988) Hard rock tunnel boring: Performance data and back-mapping. Project Report 1E-98, NTNU Trondheim.

DAUB (2010) Recommendations for the Selection of Tunneling Machines, Cologne.

EFNARC (2005) Specification and guidelines for the use of specialist products for Mechanized Tunnelling (TBM) in Soft Ground and Hard Rock, Recommendation of European Federation of Producers and Contractors of Specialist Products for Structures, Available from: http://www. https://efnarc.org/publications [Accessed 23th December 2008].

Farmer, I.W. & Glossop, N.H. (1980) Mechanics of disc cutter penetration. *Tunnels & Tunnelling*, 12, 22–25.

Farrokh, E., Rostami, J. & Laughton, C. (2012) Study of various models for estimation of penetration rate of hard rock TBMs. *Tunnelling and Underground Space Technology,* 30, 110–123.

Feinendagen, M., Ziegler, M., Azzam, R., Spagnoli, G. & Andferna Ndez-Steeger, T. (2010). Ein neues Verfahren zurBewertung des Verklebungspotenzials beim maschinellenTunnelvortrieb mit Erddruckschilden. In: *Proceedings of the 31st Baugrundtagung*, München, pp. 103–110.

Firousei, Y., Grenni, P., Caracciolo, A.B., Patrolecco, L., Todaro, C., Martinelli, D., Carigi, A., Hassanpour, J. & Peila D. (2020). The most common laboratory procedures for the evaluation of the EPB TBMs excxavated material ecotoxicity in Italy: A review. *Geoingegneria Ambientale e Mineraria*, 162, 44–56.

Fleming, K., Weltman, A., Randolph, M., Elson, K. (2009) Basic piling methods. *Piling Engineering*. CRC Press. doi: 10.1201/b22272-7.

Fornaro, M., Mancini, R., Cardu, M. & De Antonis, L. (1989) Ein Allgemeingultiges Stuckgrossenverteilungsgesetz und seine Anwendung in der Sprengparametersauswahl Hinsichtlich der Optimisierung der Haufwerksbildung in einem Steinbruch, *Berg-und Huttenmannische Monatshefte*, 134(2), 31–34.

Frenzel, C. (2010) Verschleisskostenprognose für Schneidrollen bei maschinellen Tunnelvortrieben in Festgesteinen. Technical report, TU Münich, Ingenieurgeologie Hydrogeologie Geothermie, München.

Frenzel, C., Kasling, H. & Thuro, K. (2008) Factors influencing disc cutter wear, *Geomechanics and Tunnelling*, 1(1), 55–60.

Fuoco, S., Zurlo R. & Lanconelli M. (2017) Tunnel deformation limits and interaction with cavity support: The experience inside the exploratory tunnel of the Brenner Base Tunnel. In: Jakobsen, Nilsen, Holter (eds), *ITA-AITES WTC 2017: Surface challenges – Underground Solutions: Proceedings of the World Tunnel Congress 2019,* June 2017, Bergen, Norway, Norwegian Tunnelling Society, Oslo.

Galli, M. & Thewes, M. (2014). Investigations for the application of EPB shields in difficult grounds. *Geomechanics and Tunnelling*, 7, 31–44.

Galli, M. & Thewes, M. (2019) Rheological characterisation of foam-conditioned sands in EPB tunneling. *International Journal of Civil Engineering*, 17(1), 145–160.

Garroux de Olivera, D., Thewes, M., Diederichs, M. & Langmaack, L. (2018a) EPB tunnelling through clay-sand mixed soils: Proposed methodology for clogging evaluation. *Geomechanik und Tunnelbau*, 11(4), 375–387.

Garroux de Olivera, D., Thewes, M., Diederichs, M. & Langmaack, L. (2018b) Consistency index and its correlation with EPB excavation of mixed clay–sand soils. *Geotechnical and Geological Engineering*, 37, 327–345.

Gehring, K. (1995) Leinstungs- und Verschleissprognosen im maschinellen Tunnelbau (Prognosis pf advance rates and wear for underground mechanized excavations, in Germany). *Felsbau*, 13, 439–448.

Gelmi, G. (2016) Inclined shafts drilled by a raise boring machine. In: *Proceedings of WTC 2016*, 22–28 April 2016, San Francisco, SME, Englewood, CO.

T&F Proofs – Not for Distribution

Gertsch, R., Gertsch, L. & Rostami, J. (2007) Disc cutting test in Colorado Red Granite: Implications for TBM performance prediction. *International Journal of Rock Mechanics and Mining Sciences*, 44, 238–246.

Gharahbagh, E.A., Rostami, J. & Talebi, K. (2014). Experimental study of the effect of conditioning on abrasive wear and torque requirement of full face tunneling machines. *Tunnelling and Underground Space Technology,* 41, 127–136.

Gong, Q.M. (2007) Influence of rock brittleness on TBM penetration rate in Singapore Granite. *Tunnelling and Underground Space Technology*, 22, 317–324.

Gong, Q.M. & Zhao, J. (2009) Development of a rock mass characteristics model for TBM penetration rate prediction. *International Journal for Rock Mechanics and Mining Sciences*, 46(1), 8–18.

Gourvenec, S.M. & Powrie, W. (1999) Three-dimensional finite-element analysis of diaphragm wall installation. *Geotechnique*, 49. doi: 10.1680/geot.1999.49.6.801.

Graham, P.C. (1976) Rock exploration for machine manufacturers. In: Bieniawski, A.A. (ed). *Exploration for Rock Engineering Proceedings of the Symposium on Exploration for Rock Engineering, Johannesburg*, 1–5 November 1976, Balkema, pp. 173–180.

Grandori, R. (2007) TBM Performances and Rock Mass Excavability (RME) classification system [Lecture], MEDWIP Experts Workshop, 3–4 July 2007, Madrid, Spain.

Grandori, R. (2016) Frese scudate di grande diametro per lo scavo in roccia, confronto produzioni e criteri di scelta al variare del diametro e della geologia. *Gallerie e grandi opere sotterranee*, 120, 41–61.

Grandori, R. (2017) Vantaggi e limiti dello scavo meccanizzato: quando con la macchina e quando senza. *Gallerie e grandi opere sotterranee*, 124, 39–44.

Grandori, R. & Romualdi, P. (2004) The Abdalajis tunnel (Malaga-Spain). The new Double Shield Universal TBM challenge. *Proceeding of Congress on Mechanized Tunnelling: Challenging Case Histories, GEAM/SIG*, Turin, pp. 35–42.

Guglielmetti, V., Grasso, P., Mahtab, A. & Xu, S., (2008) *Mechanized Tunneling in Urban Areas*. Taylor & Francis, Balkema.

Hamidi, J.K., Shahriar, K., Rezai, B. & Rostami, J. (2010) Performance prediction of hard rock TBM using Rock Mass Rating (RMR) system. *Tunnelling and Underground Space Technology*, 25, 333–345.

Hashimoto, T., Brinkman, J., Konda, T., Kano, Y., Feddema, A. (2005) Simultaneous backfill grout-ing, pressure development in construction phase and in the long-term. *ITA-AITES WTC 2014: Proceedings of the ITA WTC World Tunnel Congress 2014*, 22–27 May 2004, Singapore.

Hassanpour, J., Rostami, J. & Zhao, J. (2011) A new hard rock TBM performance prediction model for project planning. *Tunnelling and Underground Space Technology*, 26(5), 595–603.

Hollmann, F. & Thewes, M. (2012). Evaluation of the tendency of clogging and separation of fines on shield drives. *Geomechanics and Tunnelling*, 35(5), 574–580.

Hollmann, F.S. & Thewes, M. (2013). Assessment method for clay clogging and disintegration of fines in mechanised tunnelling. *Tunnelling and Underground Space Technology*, 37, 96–106.

Hsieh, H-S., Wang, C.-C., Ou, C.-Y. (2003) Use of jet grouting to limit diaphragm wall displacement of a deep excavation. *Journal of Geotechnical and Geoenvironmental Engineering*, 129. doi: 10.1061/(asce)1090-0241(2003)129:2(146).

Hughes, H.M. (1986). The relative cuttability of coal-measures stone. *Journal of Mining Sciences and Technology*, 3(2), 95–109.

Hustrulid, W.A., Bullock, R.C. & Bullock, R.L. (2001) *Underground Mining Methods: Engineering Fundamentals and International Case Studies*, SME, Englewood, CO.

Innaurato, N., Mancini, E. & Zaninetti, A. (1990) Un'applicazione della classificazione delle rocce alla fresabilità delle stesse. *Bollettino dell'Associazione Subalpina*, 1, 73–98.

Innaurato, N., Mancini, R., Rondena, E. & Zaninetti, A. (1991) Forecasting and effective TBM performances in a rapid excavation of a tunnel in Italy. In: *Proceedings of the 7th ISRM Congress*, 16–20 September 1991, Aachen, Germany, pp. 1009–1014.

T&F Proofs – Not for Distribution

Innaurato, N., Oreste, P.P. & Vinai, R. (2007) Experimental and numerical studies on rock breaking with TBM tools under high stress confinement. *Rock Mechanics and Rock Engineering*, 40(5), 429–451.

ITA-AITES WG 14 & WG 19 (2016) Recommendations on the development process for mined tunnel. [Online] Available from: https://about.ita-aites.org/publications/wg-publications/content/19-working-group-14-mechanized-tunnelling [Accessed 10th October 2020].

Ivantchev, A. & Del Rio, J. (2015). Two-component backfill grouting for double shield TBMs. In: *ITA-AITES World Tunnel Congress 2015: Promoting tunnelling in SEE Region: Proceedings of the ITA WTC World Tunnel Congress 2015*, 22–28 May 2015, Dubrovnik, HR.

König, R. (1994) Three modern firing methods are on choice. *Nobel Hefte*, 1, 1–12.

Kuesel, T.R., King, E.H. & Bickel, J.O. (1996) *Tunnel Engineering Handbook*. Springer, Berlin.

Künstle, B., & Frey, A. (2011) Vertikalschachtbau am Pumpspeicherkraftwerk Vianden/Luxemburg. *Tunnel*, 4, 56–59.

L'Amante, D., Flora, A., Russo, G. & Viggiani, C. (2012) Displacements induced by the installation of diaphragm panels. *Acta Geotechnica*, 7, 203–218. doi: 10.1007/s11440-012-0164-9.

Langmaack, L. & Feng, Q. (2005) Soil conditioning for EPB machines: Balance of functional and ecological properties. In: *ITA-AITES World Tunnel Congress 2005: Underground Space: Analysis of the Past and lesson for the Future, Proceeding of WTC 2015*, 7–12 May 2005, Istambul, Turkey. Taylor & Francis, pp. 729–735.

Lawn, B.R. & Swain, M.V. (1975) Indentation fracture in brittle rocks and glasses. *International Journal of Rock Mechanics and Mining Sciences*, 13(11), 311–319.

Liebherr-Nenzing Gmbh (2020) Baustellenbericht 2. Stammstrecke München Marienhof, Schlitzwandherstellung mit Fräse, Internal job site report, LWN, Nenzing, Austria.

Lim, A. & Hsieh, P. (2021) Numerical study of ground surface settlement induced by diaphragm and buttress installation. *Geotech Engineering*, 55.

AU: Please provide the page range for reference 'Lim & Hsieh (2022)'.

Liu, H., Li, K., Wang, J., Cheng, C. (2021) Numerical simulation of deep foundation pit construction under complex site conditions. *Advances in Civil Engineering*, 2021. doi: 10.1155/2021/6669466.

Magro, A. (1995) *Analisi di fattori influenti sulla qualità del risultato nello scavo di gallerie con esplosivo*. Tesi di laurea, Politecnico di Torino.

Maidl, U. (1995) Erweiterung der Einsatzbereiche der Erdruckschilde durch Bodenkonditionierung Schaum, Technical reports of the Institute of Structural Engineering. Ruhr University Bochum, 95(4), 723–728.

Maidl, B., Schmid, L., Ritz, W. & Herrenknecht, M. (2008) *Hardrock Tunnel Boring Machines*. Ernst & Sohn Publishing, Berlin.

Maidl, B., Herrenknecht, M., Maidl, U. & Wehrmeyer, G. (2013a) *Mechanized Shield Tunnelling*. Ernst & Sohn, Berlin.

Maidl, B., Thewes, M. & Maild, U. (2013b) *Handbook of Tunnel Engineering.* Volume I: Structures and Methods. Ernst & Sohn Publishing, Berlin.

Maidl, B., Thewes, M. & Maild, U. (2013c) *Handbook of Tunnel Engineering*. Volume II: Basics and Additional Services for Design and Construction. Ernst & Sohn Publishing, Berlin.

Mancini, R. & Pelizza, S. (1969) Previsione dei consumi di esplosivo e di lavoro di perforazione nello scavo di gallerie, In: *1st Convegno Internazionale sui problemi tecnici nella costruzione di gallerie*, S.P.E. Ed., Torino, pp. 1075–1087.

Mancini, R., Gaj, F. & Cardu, M. (1995) Atlas of blasting rounds for tunnel driving. Politeko Ed. Torino.

Martinelli, D., Peila, D. & Campa, E. (2015). Feasibility study of tar sands conditioning for earth pressure balance tunnelling. *Journal of Rock Mechanic and Geotechnical Engineering,* 7, 684–690.

Martinelli, D., Todaro, C., Luciani, A., Peila, L., Carigi, A. & Peila, D. (2018) Modern approach for studying granular and cohesionless soil conditioning for EPB tunneling. *Gallerie e Grandi Opere Sotterranee*, 128, 19–28.

T&F Proofs – Not for Distribution

Martinelli, D., Todaro, C., Luciani, A. & Peila, D. (2019). Use of a large triaxial cell for testing conditioned soil for EPBS tunnelling. *Tunnelling and Underground Space Technology*, 94, 103126.

McFeat-Smith, J. & Concilia, M. (2000) Investigation, prediction and management of TBM performance in adverse geological conditions. *Gallerie e grandi opere in sotterranee*, 62, 21–28.

Merritt, A. & Mair, R. (2006). Mechanics of tunnelling machine screw conveyors: Model tests. *Geotechnique*, 56(9), 605–615.

Moormann, C. (2004) Analysis of wall and ground movements due to deep excavations in soft soil based on a new worldwide database. *Soils Found*, 44, 87–98. doi: 10.3208/SANDF.44.87.

Mori, L., Mooney, M. & Cha, M. (2018) Characterizing the influence of stress on foam conditioned sand for EPB tunneling. *Tunnelling and Underground Space Technology*, 71, 454–465.

Morris, R.I. (1969) Rock drillability related to a roller cone bit. In: *Proceedings of Society of Petroleum Engineers of AIME*. Paper no. SPE 2389, pp 79–86.

Nash, K.L. (1974) Stability of trenches filled with fluids. *ASCE Journal of the Construction Division*, 100. doi: 10.1061/jcceaz.0000456.

Ng, C.W.W. & Yan, R.W.M. (1999) Three-dimensional modelling of a diaphragm wall construction sequence. *Geotechnique*, 49. doi: 10.1680/geot.1999.49.6.825.ch.

Nicotera, M.V. & Russo, G. (2021) Monitoring a deep excavation in pyroclastic soil and soft rock. *Tunnelling and Underground Space Technology*, 117, 104130. doi: 10.1016/j.tust.2021.104130.

Nilsen, B. & Raleigh, P. (2007). New test methodology for estimating the abrasiveness of soils for TBM tunneling. In: *Proceedings of RETC 2007: Rapid Excavation & Tunneling Conference & Exhibit*, Toronto, Canada, pp. 104–116.

Nilsen, B., Dahl, F., Holzhäuser, J. & Raleigh, P. (2007) Abrasivity testing for rock and soil. *Tunnels and Tunnelling International*, 38(4), 47–49.

Noma, T. & Tsuchiya, T. (2003) Development of low noise and vibration tunneling methods using slots by single hole continuous drilling. *Tunnelling and Underground Space Technology*, 18(2–3), 263–270.

Nosek, P. & Sperger, J. (2017) Piles as retaining structures: Common practice in the Czech building industry, In: *Proceedings of the 25th Prague Geotechnical Lecture, Prague Geotechnical Days 2017*, Prague.

Novin, A., Tarighazali, S., Foroughi, M., Fasihi, E. & Mirmehrabi, S. (2015). Comparison between sim-ultaneous backfilling methods with two components and single component grouts in EPB shield tunneling. In: *WTC 2015: ITA-AITES World Tunnel Congress 2015, Proceedings of the ITA-AITES World Tunnel Congress 2015*, May 22–28, Dubrovnik, HR.

Oblozinsky, P., Ugai, K., Katagiri, M., Saitoh, K., Ishii, T., Masuda, T. (2001) A design method for slurry trench wall stability in sandy ground based on the elasto-plastic FEM. *Computers and Geotechnics*, 28. doi: 10.1016/S0266-352X(00)00028-8.

Oggeri, C. & Oreste, P. (2012) The wear of tunnel boring machine excavation tools in rock. *American Journal of Applied Sciences*, 9(10), 1606–1617.

AU: Please provide the publisher location for reference 'Olofsson (1991)'.

Olofsson, S. O. (1991) *Applied Explosives Technology for Construction and Mining*. Applex.

Oñate Salazar, C., Martinelli, D., Todaro, C., Boscaro, A. & Peila, D. (2016) Preliminary study of wear induced by granular soil on metallic parts of EPB tunnelling machines. *Geoingegneria Ambientale e Mineraria*, 148, 67–70.

Oñate Salazar, C., Todaro, C., Bosio, F., Bassini, E., Ugues, D. & Peila, D. (2018). A new test device for the study of metal wear in conditioned granular soil used in EPB shield tunneling. *Tunnelling and Underground Space Technology,* 73, 212–221.

Ou, C.-Y. (2021) *Fundamentals of Deep Excavations* (1sted.). CRC Press. doi: 10.1201/9780367853853.

Ou, C.-Y., Liao, J-T. & Lin, H-D. (1998) Performance of diaphragm wall constructed using top-down method. *Journal of Geotechnical and Geoenvironmental Engineering*, 124. doi: 10.1061/(asce)1090-0241(1998)124:9(798).

T&F Proofs - Not for Distribution

Ozdemir, L. & Wang, F. (1977) Mechanical tunnel boring prediction and machine design. Final Report Colorado School of Mines, Golden. Excavation Engineering and Earth Mechanics Inst., USA.

Peila, D., Oggeri, C., & Borio, L. (2009) Using the slump test to assess the behavior of conditioned soil for EPB tunneling. *Environmental Engineering Geoscience*, 15(3), 167–174.

Peila, D., Borio, L. & Pelizza, S. (2011). The behaviour of a two-component backfilling grout used in a tunnel-boring machine. *Acta Geotechnica Slovenica,* 8, 5–15.

Peila, D., Picchio, A. & Chieregato, A. (2013) Earth pressure balance tunnelling in rock masses: Laboratory feasibility study of the conditioning process. *Tunnelling and Underground Space Technology*, 35, 55–66.

Peila, D., Chieregato, A., Martinelli, D., Oñate, C., Shah, R.P., Boscaro, A., Dal Negro, E. & Picchio, A. (2015). Long term behavior of two component back-fill grout mix used in full face mechanized tunneling. *Geoingegneria Ambientale e Mineraria*, 159, 57–63.

Peila, D., Picchio, A., Martinelli, D. & Dal Negro, E. (2016) Laboratory tests on soil conditioning of clayey soil. *Acta Geotechnica*, 11(5), 1061–1074.

Peila, D., Martinelli, D., Todaro, C. & Luciani, A. (2019) Soil conditioning in EPB shield tunneling: An overview of laboratory tests. *Geomechanik und Tunnelbau*, 12(5), 491–498.

Peña, M. (2003) Soil conditioning for sands. *T&T International*, 35(7), 40–42.

Peron, J. & Marcheselli, P. (1994) Construction of the "Passante Ferroviario" link in Milan, lots 3P, 5P and 6P: Excavation by large EPBS with chemical foam injection. In: *Tunnelling'94: Proceeding of 7th International Symposium, IMM & BTS*, 5–7 July 1994, London, UK. Chapman & Hall, pp. 679–707.

Psomas, S. (2001) Properties of sand/foam mixtures for tunneling application. Master of Science thesis, University of Oxford.

Puller, M. (2003) *Deep Excavations: A Practical Manual*. ICE Publishing, London.

Quebaud, S., Sibai, M. & Henry, J.P. (1998) Use of chemical foam for improvements in drilling by earth-pressure balanced shields in granular soils. *Tunnelling and Underground Space Technology*, 13(2), 173–180.

Rad, F.P. (1975) Importance of groove spacing in tunnel boring machine operations. *Journal of Geotechnical Engineering Division,* 101(9), 949–962.

Ramezanzadeh, A. (2006) Performance analysis and development of new model for performance prediction of hard rock TBMs in rock mass. PhD thesis, Institut national des sciences appliqués de Lyon, France.

Ramezanzadeh, A., Rostami, J. & Kastner, R. (2003) Performance prediction models for hard rock tunnel boring machines. In: *6th Iranian Tunneling Conference*, Tehran, Iran.

Reschke, A. & Noppenberger, C. (2011). Brisbane airport link earth pressure balance machine two component tailskin grouting: A new Australian record. In: *Proceedings of 14th Australasian Tunnelling Conference 2011: Development of Underground Space*, 8–10 March 2011, Auckland, NZ.

Restner, U. & Gehring, K.H. (2002) Quantification of rock mass influence on cuttability with roadheaders. In: *Proceedings of TUR 2002*. Kraków-Krynica, Poland, University of Mining and Metallurgy, pp. 53–68.

Restner, U. & Plinninger, R.J. (2015) Rock mechanical aspects of roadheader excavation. In: *EUROCK 2015: Proceedings of Eurock 2015 & 64th Geomechanics Colloquium*, Salzburg, Austria.

Ribacchi, R. & Lembo Fazio, A. (2005) Influence of rock mass parameters on the performance of a TBM in a Gneissic Formation (Varzo Tunnel). *Rock Mechanics and Rock Engineering*, 38(2), 105–127.

Rivas, J.L., Jiménez, A., Videra, O., Gégout, P., Vallon, F. & Pegon, J.-L. (2009) Reducing the environmental impact of tunnel boring (OSCAR). In: Beer, G. (Ed.) *Technology Innovation in Underground Construction*. CRC Press, Boca Raton, FL. pp. 239–259.

T&F Proofs – Not for Distribution

Rostami, J. (2008) Hard rock TBM cutterhead modeling for design and performance prediction. *Geomechanik und Tunnelbau*, 1, 18–28.

Rostami, J. & Ozdemir, L. (1993) A new model for performance prediction of hard rock TBM. In: *11 Rapid Excavation and Tunneling Conference: Proceedings of the Rapid Excavation* and Tunneling Conference, 13–17 June 1993, Boston, MA, pp. 793–809.

Rostami, J., Ozdemir, L. & Nilsen, L. (1996) Comparison between CSM and NTH hard rock TBM performance prediction models. In: *Proceedings of the Annual Technical Meeting of the Institute of Shaft Drilling Technology (ISDT)*, 1–3 May 1996, Las Vegas, pp. 1–10.

Rostami, J., Ozdemir, L., Bruland, A. & Dahl, F. (2005) Review of issues related to Cerchar Abrasivity testing and their implications on geotechnical investigations and cutter cost estimates. In: *17 Rapid Excavation and Tunneling Conference: Proceedings of the Rapid Excavation Tunnelling Conference, Seattle,* SME, Littleton, CO, pp. 738–751.

Rostami, J., Alavi, E., Palomino, A.M. & Mosleh, M. (2012). Development of soil abrasivity testing for soft ground tunneling using shield machines. *Tunnelling and Underground Space Technology,* 28, 245–256.

Roxborough, F.F. (1985) Research in mechanical rock excavation: Progress and prospects. In: *Rapid Excavation Tunnelling Conference: Proceedings of the 1985 Rapid Excavation and Tunneling Conference*, 16–20 June 1985, New York.

Roxborough, F.F. & Phillips, H.R. (1975) Rock excavation by disc cutter. *International Journal Rock Mechanics and Mining Sciences*, 12(12), 361–366.

Russo, G., Nicotera, M.V. & Autuori, S. (2016) San pasquale station of line 6 in naples: Measurements and numerical analyses. *Procedia Engineering*. doi: 10.1016/j.proeng.2016.06.177.

Russo, G., Nicotera, M.V. & Autuori, S. (2019) Three-dimensional performance of a deep excavation in sand. *Journal of Geotechnical and Geoenvironmental Engineering*. doi: 10.1061/(ASCE)GT.1943-5606.0002037.

Salonen, O. (2018) Drilling Techniques for Blasters. PECCS – Pan European Competence Certificate for Shot-Firers, EFEE, Swedish Rock Blasting Contractors Association (BEF).

Sanio, H.P. (1985) Prediction of the performance of disc cutters in anisotropic rock. *International Journal Rock Mechanics and Mining Sciences*, 22(3), 153–161.

Santarelli, S. & Ricci, P. (2019) Innovative methods for excavation and ground improvement in Oslo. In: Peila, D., Viggiani, G. & Celestino, T. (Eds.) *Tunnels and Underground Cities: Engineering and Innovation meet Archaeology, Architecture and Art*. CRC Press, Boca Raton, FL, pp. 6160–6169.

Sapigni, M., Berti, M., Bethaz, E., Busillo, A. & Cardone, G. (2002) TBM performance estimation using rock mass classification. *International Journal Rock Mechanics and Mining Sciences*, 39(6), 771–788.

Sass, I. & Burbaum, U. (2009) A method for assessing adhesion of clays to tunneling machines. *Bulletin of Engineering Geology and the Environment*, 68(1), 27–34.

Schönit, M. & Quasthoff, P. (2019) *Compendium Deep Foundation*. Liebherr, Ernst & Sohn, Berlin, Germany.

Sebastiani, D., Vilardi, G., Bavasso, I., Di Palma, L. & Miliziano, S. (2019) Classification of foam and foaming products for EPB mechanized tunnelling based on half-life time. *Tunnelling and Underground Space Technology*, 92, 103044.

Shaterpour-Mamaghani, A. & Bilgin, N. (2016) Some contributions on the estimation of performance and operational parameters of raise borers: A case study in Kure Copper Mine, Turkey. *Tunnelling and Underground Space Technology*, 54, 37–48.

Shaterpour-Mamaghani, A., Copur, H., Dogan, E. & Erdogan, T. (2018) Development of new empirical models for performance estimation of a raise boring machine. *Tunnelling and Underground Space Technology*, 82, 428–444.

Sucher, S.J. (1998) American ground: Unbuilding the world trade center. *The Moral Leader*. doi: 10.4324/9780203940648-28.

T&F Proofs – Not for Distribution

Tarkoy, P.J. (1973a) A study of rock properties and Tunnel Boring Machine advance rates in two mica schist formation. In: *Proceedings of the 15th ASCE Symposium on Rock Mechanics*, Custer State Park, South Dakota.

Tarkoy, P.J. (1973b) Predicting Tunnel Boring Machine (TBM) penetration rates and cutter costs in selected rock types. In: *Proceedings of the 9th Canadian Symposium on Rock Mechanics*, December 1973, Montreal, Canada, Energy, Mines and Resources, Ottawa.

Tervoven, T. & Martin, D. (1980) Tunnel will turn up the heat in Turku. *Tunnels & Tunnelling International*, 12(15), 42–43.

Thewes, M. (1999) Adhäsion von Tonböden beim Tunnelvortrieb mit Flüssigkeitsschilden. PhD Thesis, Bergische Universität.

Thewes, M. (2013) Backfilling grout. In: *Proceedings of the Seminar on Mechanized Tunneling*, April 26–27, Sao Paulo, Brazil.

Thewes, M., & Burger, W. (2005) Clogging of TBM drives in clay–identification and mitigation of risks. In: Erdem and Solak (Eds.) *ITA-AITES WTC 2005: Underground Space Use: Analyses of the Past and Lessons for the Future: Proceedings of the International World Tunnel Congress and the 31st ITA General Assembly*, 7–12 May 2005, Istanbul, Turkey, Balkema, London, pp. 737–742.

Thewes, M. & Budach, C. (2009). Grouting of the annular gap in shield tunneling: An important factor for minimisation of settlements and production performance. In: Kocsonya, P. (Ed.) *WTC 2009: Safe Tunnelling for the City and for the Environment: Proceedings of ITA-AITES World Tunnel Congress 2009, WTC 2019*, 22–28 May 2009, Budapest, Hungary.

Thewes, M. & Budach, C. (2010) Soil conditioning with foam during EPB tunneling. *Geomechanik und Tunnelbau*, 3(3) 256–267.

Thewes, M., Budach, C., & Bezuijen, A. (2012) Foam conditioning in EPB tunnelling. In: Viggiani, G. (Ed.) *International Symposium on Geotechnical Aspects of Underground Construction in Soft Ground: Proceedings of the 7th International Symposium on Geotechnical Aspects of Underground Construction in Soft Ground*, 17–19 May 2011, Roma, Italy, Leiden, The Netherlands, CRC Pres, pp. 127–135.

Thuro, K. & Plinninger, A. (2003) Hard rock tunnel boring, cutting, drilling and blasting: Rock parameters for Excavability. In: *Proceedings of the 10th ISRM Congress*, Sandton, South Africa, September 2003.

Thuro, K. & Spaun, G. (1996) Introducing the destruction work as a new rock property of toughness referring to drillability in conventional drill and blast tunnelling. In: *ISRM-EUROCK 1996: Prediction and Performance in Rock Mechanics and Rock Engineering: Proceedings of the International Symposium of the ISRM-EUROCK 96*, 2–5 September 1996, Turin, Italy.

Todaro, C. (2016) Analysis of the foam penetration in the EPB excavation. *Geoingegneria Ambientale e Mineraria*, 147, 49–52.

Todaro, C., Peila, L., Luciani, A., Carigi, A., Martinelli, D. & Boscaro, A. (2019). Two component backfilling in shield tunneling: Laboratory procedure and results of a test campaign. *WTC 2019: ITA-AITES World Tunnel Congress 2019, WTC 2019*, 3–9 May 2019, Naples, Italy. London, Taylor & Francis, pp. 3210–3223.

Todaro, C., Bongiorno, M., Carigi, A. & Martinelli, D. (2020a) Short term strength behavior of two-component backfilling in shield tunneling: Comparison between standard penetrometer test results and UCS. *Geoingegneria Ambientale e Mineraria*, 159, 33–40.

Todaro, C., Godio, A., Martinelli, D. & Peila, D. (2020b). Ultrasonic measurements for assessing the elastic parameters of two-component grout used in full-face mechanized tunneling. *Tunnelling and Underground Space Technology*, 106, 103630.

Todaro, C., Carigi, A., Martinelli, D. & Peila, D. (2021). Study of the shear strength evolution over time of two-component backfilling grout in shield tunneling. *Case Studies in Construction Materials*, 15, e00689.

T&F Proofs – Not for Distribution

Tsai, J.S., Jou, L.D. & Hsieh, H.S. (2000) A full-scale stability experiment on a diaphragm wall trench. *Canadian Geotechnical Journal*, 37. doi: 10.1139/t99-122.

Türtscher, M. & Schneider, E. (2012) ABROCK: Development of a new model for the prediction of penetration and bit wear for TBM tunnelling in solid rock. In: *Brenner-Congress*, pp. 119–127.

Vinai, R., Oggeri, C. & Peila, D. (2008) Soil conditioning of sand for EPB applications : A laboratory research. *Tunnelling and Underground Space Technology*, 23, 308–317.

Wang, H., Wang, S., Zhong, J., Qu, T., Liu, Z., Xu, T. & Liu, P. (2021) Undrained compressibility characteristics and pore pressure calculation model of foam-conditioned sand. *Tunnelling and Underground Space Technology*, 118, 104161.

Whittaker, B.N. & Smith, S.F. (1987). Stability and operational aspects of room and pillar mining in UK sedimentary iron-ore deposits. In: *Proceedings of the International Symposium on Underground Mining Methods and technology*, 8–13 September 1986, Nottingham, UK.

Wittke, W., Druffel, R., Erichsen, C., Gattermann, J., Kiehl, J., Schmitt, D., Tegelkamp, M., Wittke, M., Wittke-Gattermann, P. & Wittke-Schmitt, B. (2007) Stability analysis and design for mechanized tunneling (translated from the German edition: Statik und Konstruktion maschineller Tunnelvortriebe. Geotechnik inForschung und Praxis), *WBI-PRINT 6,* VGE-Verlag Glückauf GmbH, Essen.

Wu, Y., Nazem, A., Meng, F. & Mooney, M. A. (2020) Experimental study on the stability of foam-conditioned sand under pressure in the EPBM chamber. *Tunnelling and Underground Space Technology*, 106, 103590.

Yagiz, S. (2007) Utilizing rock mass properties for predicting TBM performance in hard rock condition. *Tunnelling and Underground Space Technology*, 23, 326–339.

Yagiz, S. (2008) Assessment of brittleness using rock strength and density with punch penetration test. *Tunnelling and Underground Space Technology*, 24, 66–74.

Yoshida, Y. (1985) On the stability of a slurry trench walls in cohesionless soils. *Soils Found,* 25. doi: 10.3208/sandf1972.25.4_159.

Zhang, Y., Chen, C., Zheng, Y., Shao, Y. & Sun, C. (2021) Application of fiber bragg grating sensor technology to leak detection and monitoring in diaphragm wall joints: A field study. *Sensors (Switzerland)*, 21. doi: 10.3390/s21020441.

Zhiqiang, L. & Yiping, M. (2015) Key technologies of drilling process with raise boring method. *Journal of Rock Mechanics and Geotechnical Engineering*, 7, 385–394.

Zimnik, A.R., van Baalen Lennart, R.P., Verhoef, N.W. & Ngan-Tillard, D.J.M. (2000) The adherence of clay to steel surfaces. In: *ISRM-GeoEng 2000: International Conference on Geotechnical and Geological Engineering: Proceeding of GeoEng 2000*, 19–24 November 2000, Melbourne, Australia. Technomic, Lancaster, PA.

Zizka, Z. & Thewes, M. (2016) Recommendations for face support pressure calculations for shield tunnelling in soft ground. Deutscher Ausschuss fur unterirdisches Baune (DAUB)—German Tunnelling Committee (ITA-AITES).

Zumsteg, R. & Puzrin, A.M. (2012). Stickiness and adhesion of conditioned clay pastes. *Tunnelling and Underground Space Technology*, 31, 86–96.

Zumsteg, R., Plötze, M. & Puzrin, A. (2013a) Reduction of the clogging potential of clays: New chemical applications and novel quantification approaches. *Géotechnique*, 36(4), 276–286.

Zumsteg, R., Plötze, M. & Puzrin, A.M. (2013b) Effects of dispersing foams and polymers on the mechanical behaviour of clay pastes. *Géotechnique*, 63(11), 920–933.

T&F Proofs – Not for Distribution