POLITECNICO DI TORINO
Repository ISTITUZIONALE

Spectral gaps for the linear water-wave problem in a channel with thin structures

Original
Spectral gaps for the linear water-wave problem in a channel with thin structures / Cancedda, A., CHIADO' PIAT, V., Nazarov, S.A., Taskinen, J.J.. - In: MATHEMATISCHE NACHRICHTEN. - ISSN 0025-584X. - ELETTRONICO. - 295:4(2022), pp. 657-682. [10.1002/mana.201900500]

Availability:
This version is available at: 11583/2973339 since: 2022-11-23T19:50:34Z

Publisher:
Wiley

Published
DOI:10.1002/mana.201900500

Terms of use:

This article is made available under terms and conditions as specified in the corresponding bibliographic description in the repository

Publisher copyright

(Article begins on next page)

27 November 2026

Check for updates

Received: 16 November 2019 | Revised: 25 June 2020 | Accepted: 16 July 2020

DOI: 10.1002/mana.201900500

MATHEMATISCHE NACHRICHTEN

ORIGINAL PAPER

Spectral gaps for the linear water-wave problem in a channel with thin structures

Andrea Cancedda[1] | **Valeria Chiadó Piat**[2] | **Sergei A. Nazarov**[3] | **Jari Taskinen**[4]

[1]Dipartimento di Scienze Matematiche, Politecnico di Torino, Corso Duca degli Abruzzi, 24, Torino 10129, Italy

[2]Department of Mathematical Sciences "G.L. Lagrange" and Gnampa-Indam, Dipartimento di Eccellenza 2018-2022, Politecnico di Torino, Corso Duca degli Abruzzi, 24, Torino 10129, Italy

[3]Institute of Problems of Mechanical Engineering RAS, V.O., Bolshoi pr., 61, St. Petersburg 199178, Russia

[4]Department of Mathematics and Statistics, University of Helsinki, P.O. Box 68, Helsinki 00014, Finland

Correspondence
Jari Taskinen, Department of Mathematics and Statistics, P.O. Box 68, University of Helsinki, 00014 Helsinki, Finland.
Email: jari.taskinen@helsinki.fi

Funding information
Indam-Gnampa, Grant/Award Numbers: U-UFMBAZ-2018-000835, U2015/000910; Russian Foundation for Basic Research, Grant/Award Number: 18-01-00325; Academy of Finland, Grant/Award Number: 324219

Abstract

We consider the linear water-wave problem in a periodic channel $\Pi^h \subset \mathbb{R}^2$, which consists of infinitely many identical containers and connecting thin structures. The connecting canals are assumed to be of constant, positive length, but their depth is proportional to a small parameter h. Motivated by applications to surface wave propagation phenomena, we study the band-gap structure of the essential spectrum in the linear water-wave system, which forms a spectral problem where the spectral parameter appears in the Steklov boundary condition posed on the free water surface. We show that for small h there exists a large number of spectral gaps and also find asymptotic formulas for the position of the gaps as $h \to 0$: the endpoints are determined within corrections of order $h^{3/2}$. The width of the first spectral band is shown to be $O(h)$.

KEYWORDS
essential spectrum, linear water-wave problem, periodic domain, spectral gap, thin structure

MSC (2020)
35J05, 35J25, 35P15, 47A10

1 | INTRODUCTION

1.1 | Overview of the results

In this paper we deal with wave propagation modelled by the linear water-wave system with spectral Steklov boundary condition on the free water surface, see Equations (1.5)–(1.7). We consider the 2-dimensional case, where the water domain $\Pi^h \subset \mathbb{R}^2$ forms an unbounded periodic channel consisting of infinitely many identical bounded containers connected by canals with constant length but with width (or rather depth) proportional to a small parameter $h > 0$, see Fig. 1. The frequency ranges included in the continuous spectrum of this physical system describe the propagation of water waves

This is an open access article under the terms of the Creative Commons Attribution License, which permits use, distribution and reproduction in any medium, provided the original work is properly cited.
© 2022 The Authors. Mathematische Nachrichten published by Wiley-VCH GmbH

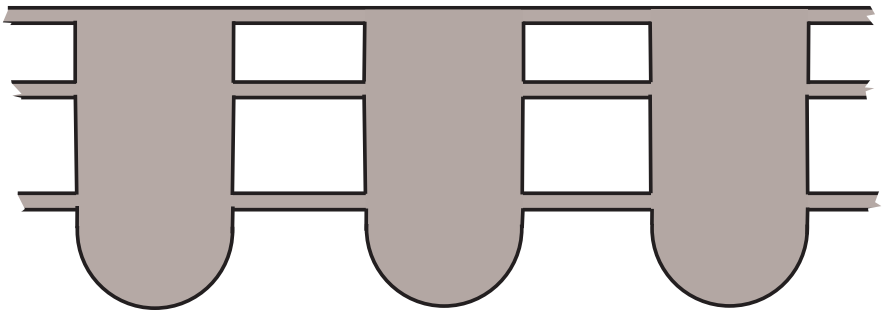

FIGURE 1 Periodic channel with thin connecting canals

on the free surface of the water filled domain, see for example the monograph [11]. The bands and gaps of the continuous spectrum are called passing and stopping zones for waves.

The special feature of the linear water-wave equation is the appearance of the spectral parameter in the Steklov boundary condition on the free water surface. This makes a direct application of the classical Sobolev-space methods difficult, see for example [11], especially for an approach based on the application of the Dirichlet-to-Neumann-(or Steklov–Poincaré-) operator, which is a non-local operator and thus complicated from the point of view of applying the methods of the asymptotic analysis; also, see the review paper [12]. We follow here the modified techniques used for example in [19, 22] which are based, among other things, on an unconventional definition of the problem operator with mixed types of inner products containing both volume and surface integrals; see (1.14). This method has been used for example for proving or disproving the existence of eigenvalues in some frequency interval.

For a fixed h, the essential spectrum $\varsigma_{\rm ess}$ of the original problem is non-empty due to the unboundedness of the domain. More precisely, due to the periodicity of the domain, it follows from the Floquet–Bloch–Gelfand(FBG) -theory (see for example the books [10, 23, 24] and papers [15]; [18], Theorem 2.1; [21], Theorem 3.4.6, for a presentation relevant to the case of this paper) that $\varsigma_{\rm ess}$ has the band-gap structure

$$\varsigma_{\rm ess} = \bigcup_{k=1}^{\infty} \mathsf{B}_k^h\,, \quad \mathsf{B}_k^h = \big\{\Lambda_k^h(\theta) \ : \ \theta \in [0, 2\pi)\big\}, \tag{1.1}$$

where the spectral bands B_k^h are compact subintervals of the positive real axis. By θ we denote here the Floquet parameter and $\big(\Lambda_k^h(\theta)\big)_{k=1}^{\infty}$ is the sequence of the eigenvalues of a "model problem" obtained from (1.5)–(1.7) by using the FBG-transform. In general, the spectral bands may and often do overlap, in which case the essential spectrum is connected. However, in between the bands there may also appear gaps which are free of the essential spectrum and which describe "forbidden" frequencies with no wave propagation (or, stopping zones between passing ones). The position of such gaps is in general of interest in physical applications, since they may be wanted for example for the design of wave filters and dampers.

In this paper we study the asymptotic position of the bands B_k^h as $h \to +0$ and apply the results to detect gaps in the essential spectrum (1.1). In the main result, Theorem 5.1, we show that

$$\left|\Lambda_k^h(\theta) - h\Lambda_k^0(\theta)\right| \le C_k h^{3/2} \tag{1.2}$$

for all $k \in \mathbb{N}$ (with constants $C_k > 0$ not depending on h or θ), where the sequence $\Lambda_k^0(\theta)$ consists of the eigenvalues of a "limit problem" corresponding to the case $h = 0$, or vanishing canals: it is a system of finitely many boundary value problems for certain simple ordinary differential equations with certain peculiar boundary conditions connecting them. The numbers Λ_k^0 are solutions of an explicit transcendental equation (3.6), and as we will show in Section 3, it is possible to get a lot of information on them by using computational arguments and in particular to show that infinitely many spectral gaps indeed exist in the case of the limit problem. Then, the estimate (1.2) implies that the spectrum $\varsigma_{\rm ess}$ also has at least any given number of gaps, if $h > 0$ is sufficiently small; see Theorem 5.2. However, since the constants C_k in (1.2) also depend on k, we can only assure that finitely many gaps exist for a fixed h.

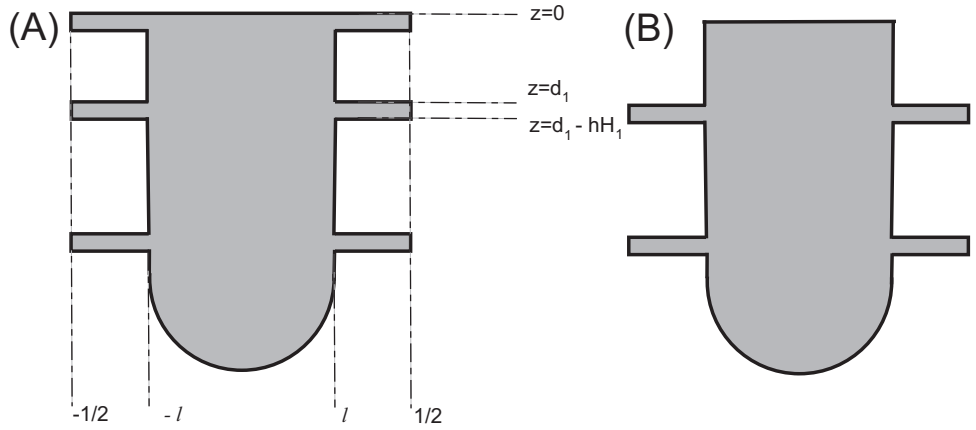

FIGURE 2 a) Periodicity cell of the channel, b) periodicity cell in the case $H_0 = 0$

The proofs of Theorem 5.1 and Theorem 5.2 will be presented in Sections 5 and 6, and they consist of the justification of the formal asymptotic analysis of the model problem in Sections 2 and 4; the latter section contains the construction of the approximate eigenfunctions of the model problem. One more main tool is the so-called convergence lemma, which is Lemma 6.1 in Section 6.

Besides the Steklov spectral condition and periodic structure, one more characteristic feature of the problem under consideration is described by junctions of massive bodies with thin ligaments. For example, the dumbbell, which is a union of two massive domains connected by a thin cylinder, is a classical object in asymptotic analysis. The spectrum of the Laplace–Neumann problem in such a domain has been studied in many papers starting from the pioneering works [1, 2]. Aymptotic expansions for eigenvalues and eigenfunctions have been constructed and applied in many other works including [9, 16, 17]; recently, for example in [4]. Concerning asymptotic methods, we will here partly follow the approach in [20].

1.2 | Formulation of the problem, operator theoretic tools

Let us proceed with the exact formulation of the problem. We consider an infinite two-dimensional periodic channel $\Pi^h \subset \mathbb{R}^2$ consisting of water containers connected by narrow canals of diameter $O(h)$. The coordinates of the points in the channel are denoted by $x = (x_1, x_2) = (y, z)$. We choose the coordinate system in such a way that the axis of the channel is in x_1-direction and the free surface is on the line $\{x : x_2 = 0\}$. In more detail, the periodic channel Π^h is defined as the interior of the set

$$\overline{\Pi^h} = \bigcup_{j\in\mathbb{Z}} \overline{\Omega_j^h},$$

where the domains Ω_j^h are translates of the periodicity cell Ω^h,

$$\Omega_j^h = \left\{x : (x_1 - j, x_2) \in \Omega^h\right\}, \quad j \in \mathbb{Z} = \{0, \pm1, \pm2, ...\}.$$

The periodicity cell (see Fig. 2.a)) $\Omega^h \subset (-1/2, 1/2) \times (-\mathrm{d}, 0)$, where $\mathrm{d} > 0$ is the depth of the channel, consists of two main parts, the container Ω and the connecting canals $Q_0^h, \dots, Q_N^h$, more precisely,

$$\Omega^h = \Omega \cup \left(\bigcup_{j=0}^{N} Q_j^h\right) \cup \left(\bigcup_{j=0}^{N} \bigcup_{\pm} \left(\{\pm\ell\} \times \sigma_j^h\right)\right).$$

Here, the following notation and conventions are used. The container $\Omega \subset \mathbb{R}^2$ is a domain with a Lipschitz boundary and compact closure, and it is contained in the rectangle $(-\ell, \ell) \times (-\mathrm{d}, 0)$, where $0 < \ell < 1/2$. Moreover, we assume that

for some $0 < \mathsf{d}' < \mathsf{d}$ the line segments $\{\pm\ell\}\times(-\mathsf{d}',0)$ are part of the boundary $\partial\Omega$. The boundary of Ω consists of the free water surface $\Gamma_0 = \partial\Omega \cap \{z = 0\}$ and the wall and bottom $\Sigma = \partial\Omega \cap \{z < 0\}$. The connecting canals $Q_j^h := Q_{j+}^h \cup Q_{j-}^h$, where

$$Q_{j-}^h = \Big(-\frac{1}{2}, -\ell\Big) \times \sigma_j^h,\ Q_{j+}^h = \Big(\ell, \frac{1}{2}\Big) \times \sigma_j^h \quad \text{and} \quad \sigma_j^h := \big(d_j - hH_j, d_j\big), \tag{1.3}$$

are determined by the depth positions and relative widths

$$0 = d_0 > d_1 > \ldots > d_N > -\mathsf{d}', \quad H_j > 0 \ \ \forall\, j \in \{0, \ldots, N\}.$$

We also denote $\sigma^h := \bigcup_{j=0}^N \sigma_j^h$ and $P_{j\pm} = \big(\pm\ell, d_j\big)$ for all j and signs. The parameter $h > 0$ is assumed so small that the canals Q_j^h do not touch each other. We also write

$$\mathrm{Y} := \mathrm{Y}_- \cup \mathrm{Y}_+ := \Big(-\tfrac{1}{2}, -\ell\Big) \cup \Big(\ell, \tfrac{1}{2}\Big). \tag{1.4}$$

The free surface of the periodicity cell Ω^h (independent of h) is denoted by $\Gamma = \partial\Omega^h \cap \{x_2 = 0\}$, and the wall and bottom part of the boundary is

$$\Sigma^h = \partial\Omega^h \setminus \Big(\overline{\Gamma} \cup \big(\{-\ell\}\times\sigma^h\big) \cup \big(\{\ell\}\times\sigma^h\big)\Big)$$

i.e. we leave out the lateral ends of the canals from Σ^h. Finally, the free water surface of the entire channel Π^h and its wall/bottom are defined, respectively, as

$$\Gamma_{\mathrm{tot}} = \partial\Pi^h \cap \{x_2 = 0\} = \big\{x \in \mathbb{R}^2 \ :\ x_2 = 0\big\}, \quad \Sigma_{\mathrm{tot}}^h = \partial\Pi^h \cap \{x_2 < 0\}.$$

Remark 1.1. We will use the following general notation. We write $\mathbb{R}_0^+$ for the set of non-negative real numbers. Given a domain $\Xi \subset \mathbb{R}^d$, the symbol $|\Xi|$ stands for its volume in $\mathbb{R}^d$ and $(\cdot,\cdot)_\Xi$ stands for the natural scalar product in $L^2(\Xi)$, and $H^k(\Xi)$, $k \in \mathbb{N}$, for the standard Sobolev space of order k on Ξ. The norm of a function f belonging to a Banach function space X is denoted by $\|f; X\|$. For $r > 0$ and $a \in \mathbb{R}^N$, $B(a,r)$ (respectively, $S(a,r)$) stand for the Euclidean ball (resp. ball surface) with centre a and radius r. By C, c (respectively, C_k, c_k, $C(k)$ etc.) we mean positive constants (resp. constants depending on a parameter k) which do not depend on functions or variables appearing in the inequalities, but which may still vary from place to place. The gradient and Laplace operators ∇ and Δ act in the variable x, unless otherwise indicated. We write $\partial_y = \partial/\partial y$ etc. , and ∂_ν for the outward normal derivative on the boundary of a given planar domain.

In the framework of the linear water-wave theory we consider the spectral Steklov–Neumann problem in the channel Π^h,

$$-\Delta u(x) = 0 \ \ \text{for all } x \in \Pi^h, \tag{1.5}$$

$$\partial_\nu u(x) = 0 \ \ \text{for a.e. } x \in \Sigma_{\mathrm{tot}}^h, \tag{1.6}$$

$$\partial_z u(x) = \lambda u(x) \ \ \text{for a.e. } x \in \Gamma_{\mathrm{tot}}. \tag{1.7}$$

Here $u = u(x) = u(x;h)$ is the velocity potential, $\lambda = \lambda(h) = g^{-1}\omega^2$ is a spectral parameter related to the frequency of harmonic oscillations $\omega = \omega(h) > 0$ and the acceleration of gravity $g > 0$ (the dependence of λ on h will usually not be displayed). By the geometric assumptions made above, the derivative ∂_ν is defined almost everywhere on Σ^h. It coincides with ∂_z on the free surface Γ_{tot}.

The spectral problem (1.5)–(1.7) can be transformed into a family of spectral problems in the periodicity cell using the FBG-transform

$$u(y,z) \mapsto U(y,z,\theta) = \frac{1}{\sqrt{2\pi}} \sum_{j\in\mathbb{Z}} e^{-i\theta j} u(y+j,z),$$

where $(y,z) \in \Pi^h$ on the left while $\theta \in [0,2\pi)$ and $(y,z) \in \Omega^h$ on the right. As is well known, the FBG-transform establishes an isometric isomorphism

$$L^2\big(\Pi^h\big) \simeq L^2\big(0,2\pi; L^2\big(\Omega^h\big)\big),$$

where $L^2(0,2\pi;B)$ is the Lebesgue space of functions with values in the Banach space B, endowed with the norm

$$\big\|f; L^2(0,2\pi;B)\big\| = \left(\int_0^{2\pi} \|f(\theta);B\|^2\, d\theta\right)^{1/2}.$$

We denote by $H^1_\theta\big(\Omega^h\big)$, where $\theta \in [0,2\pi)$, the subspace of the Sobolev space $H^1\big(\Omega^h\big)$ consisting of functions satisfying the quasiperiodic boundary condition (1.11) (see below). The FBG-transform is also an isomorphism from the Sobolev space $H^1\big(\Pi^h\big)$ onto $H^1\big(0,2\pi; H^1_\theta\big(\Omega^h\big)\big)$ (see [5] and e.g. [21, § 3.4], [18, Cor. 3.4.3], [10, Sec. 2.2]).

Applying the FBG-transform to the differential equation (1.5) and to the boundary conditions (1.6)–(1.7), we obtain a family of model problems in the periodicity cell Ω^h parametrized by the dual variable θ, the Floquet parameter,

$$-\Delta U(x) = 0, \quad x \in \Omega^h, \tag{1.8}$$

$$\partial_\nu U(x) = 0, \quad x \in \Sigma^h, \tag{1.9}$$

$$\partial_z U(x) = \Lambda U(x), \quad x \in \Gamma, \tag{1.10}$$

$$U(1/2,z) = e^{i\theta} U(-1/2,z), \quad z \in \sigma^h, \tag{1.11}$$

$$\partial_y U(1/2,z) = e^{i\theta} \partial_y U(-1/2,z), \quad z \in \sigma^h. \tag{1.12}$$

Here, $U = U(x) = U(x;h,\theta)$ and $\Lambda = \Lambda(h,\theta)$ is a new notation for the spectral parameter λ.

Our approach to the spectral properties of the model is similar to [20, 22] and others. We write the variational form of the problem (1.8)–(1.12) for the unknown function $U \in H^1_\theta\big(\Omega^h\big)$ as

$$(\nabla U, \nabla V)_{\Omega^h} = \Lambda (U,V)_\Gamma\,,\ V \in H^1_\theta\big(\Omega^h\big). \tag{1.13}$$

We denote briefly by $\mathcal{H}^h = \mathcal{H}^h(\theta)$ the space $H^1_\theta\big(\Omega^h\big)$ endowed with the new scalar product

$$(u,v)_h = (\nabla u, \nabla v)_{\Omega^h} + (u,v)_\Gamma, \tag{1.14}$$

where the inner product in Γ is understood in the sense of traces, and define a self-adjoint, positive and compact operator $\mathcal{B}^h = \mathcal{B}^h(\theta) : \mathcal{H}^h(\theta) \to \mathcal{H}^h(\theta)$ using the identity

$$\big(\mathcal{B}^h(\theta)u, v\big)_h = (u,v)_\Gamma \ \ \forall\, u,v \in \mathcal{H}(\theta). \tag{1.15}$$

The problem (1.13) is then equivalent with the standard spectral problem in the Hilbert space $\mathcal{H}^h(\theta)$

$$\mathcal{B}^h(\theta)u = Mu,$$

with the new spectral parameter

$$M = M(h,\theta) = (1+\Lambda(h,\theta))^{-1}. \tag{1.16}$$

Clearly, according to [3, Thm. 10.1.5, 10.2.2] the spectrum of $\mathcal{B}^h(\theta)$ consist of null, which is a point in the essential spectrum, and a positive sequence $\big(M_k^h(\theta)\big)_{k=1}^{\infty}$ of eigenvalues (counting multiplicities) convergent to 0; these can be calculated from the usual min-max principle

$$M_k^h(\theta) = \min_{E_k} \max_{v\in E_k\setminus\{0\}} \frac{\big(\mathcal{B}^h(\theta)v, v\big)_h}{(v,v)_h},$$

where the minimum is taken over all subspaces $E_k \subset \mathcal{H}^h(\theta)$ of co-dimension $k-1$. Using (1.14) and (1.15), we can write a max-min principle for the eigenvalues of the problem (1.13):

$$\begin{aligned}\Lambda_k^h &= \Lambda_k^h(\theta) = \frac{1}{M_k^h(\theta)} - 1 = \max_{E_k} \min_{v\in E_k\setminus H_0^1(\Omega^h;\Gamma)} \frac{(\nabla v,\nabla v)_{\Omega^h} + (v,v)_\Gamma}{(v,v)_\Gamma} - 1\\ &= \max_{E_k} \min_{v\in E_k\setminus H_0^1(\Omega^h;\Gamma)} \frac{\|\nabla v; L^2(\Omega^h)\|^2}{\|v; L^2(\Gamma)\|^2}.\end{aligned} \tag{1.17}$$

On the other hand, formula (1.16) and the properties of the sequence $\big(M_k^h(\theta)\big)_{k=1}^{\infty}$ mean that the eigenvalues (1.17) form an unbounded sequence

$$0 \le \Lambda_1^h(\theta) \le \Lambda_2^h(\theta) \le \cdots \le \Lambda_k^h(\theta) \le \cdots \to +\infty, \tag{1.18}$$

where multiplicities have been taken into account. We denote by $U_k^{h,\theta} \in \mathcal{H}^h(\theta)$ the eigenfunction corresponding to $\Lambda_k^h(\theta)$ and assume that these eigenfunctions are normalized so as to form, for fixed h and θ, an orthonormal sequence in the space $L^2(\Gamma)$. The functions $\theta \mapsto \Lambda_k^h(\theta)$ are continuous and 2π-periodic (see for example [7, Ch. 9], [10, Sec. 3.1]). Hence, the spectral bands $\mathsf{B}_k^h = \big\{\Lambda_k^h(\theta) : \theta \in [0,2\pi)\big\}$ of (1.1) indeed are compact intervals.

2 | THE FORMAL ASYMPTOTIC PROCEDURE

2.1 | Equations for the terms of the ansatz

In Sections 2–4 we apply the method of matched asymptotic expansions, see [6, 13, 25] and others, to construct approximating near-eigenfunctions for the model problem (1.8)–(1.12). We fix k and θ for this section and usually suppress them from the notation, denoting for example $\Lambda^h := \Lambda_k^h(\theta)$, and $U^h := U_k^{h,\theta}$ and similarly for the other quantities.

We will next adapt to our problem the asymptotic ansätze used in [20] for a parameter independent Steklov problem. Inside the container Ω we write the outer expansion

$$U^h(x) = U_k^{h,\theta}(x) = a + hU'(x) + \cdots, \tag{2.1}$$

where the constant $a = a_k(\theta)$ and the function $U' = U_k'^{\theta}$ are to be determined, and the dots indicate higher order terms in h which are inessential for our formal analysis. The outer expansion in the canals $Q_{j\pm}^h$, $j = 0,\dots,N$, reads as

$$U^h\big(y,\zeta_j\big) = w_j(y) + h^2 W_j\big(y,\zeta_j\big) + \cdots, \tag{2.2}$$

where the functions $w_j = w_{j,k}^{\theta}$ and $W_j = W_{j,k}^{\theta}$ are to be determined and the variable ζ_j is stretched in z-direction,

$$\zeta_j = h^{-1}\big(z - d_j\big), \quad j = 0,1,\dots,N.$$

For $\Lambda^h = \Lambda^h_k(\theta)$, we use the expansion

$$\Lambda^h = h\Lambda^0 + \cdots \tag{2.3}$$

where $\Lambda^0 = \Lambda^0_k(\theta)$ is to be found.

2.2 | Outer expansions in the canals

Let us derive equations for the terms introduced above. Putting the expansion (2.2) into (1.8) yields

$$\partial_y^2 w_j(y) + h^2\partial_y^2 W_j(y,\zeta_j) + h^2h^{-2}\partial_\zeta^2 W_j(y,\zeta_j) = 0 + \cdots. \tag{2.4}$$

Collecting terms of the lowest order h^0 in (2.4) leads to the equation

$$-\partial_\zeta^2 W_j(y,\zeta_j) = F_j(y,\zeta_j) := \partial_y^2 w_j(y),\ \ \zeta_j \in (-H_j, 0), \tag{2.5}$$

for all $j = 0, \dots, N$.

Let us consider the case $j = 0$. Setting (2.2) and (2.3) to the boundary condition (1.10) gives us

$$\begin{aligned} h^2h^{-1}\partial_\zeta W_0(y,0) + \cdots &= \partial_z\big(w_0(y) + h^2W_0(y,\zeta_j) + \cdots\big)\Big|_{z=0} \\ &= h\Lambda^0_k\big(w_0(y) + h^2W_0(y,0) + \cdots\big) \end{aligned}$$

so we obtain from the terms of order h the boundary condition for equation (2.5)

$$\partial_\zeta W_0(y,0) = G_0(y) := \Lambda^0 w_0(y)\,,\quad y \in \mathrm{Y} \tag{2.6}$$

(see (1.4) for the notation). Since $\partial_z w_0 = 0$ everywhere on the bottom of the canal, Equation (1.9) leads to the boundary condition

$$\partial_\zeta W_0(y,-H_0) = G_H := 0\,,\quad y \in \mathrm{Y}. \tag{2.7}$$

We consider the problem (2.5), (2.6), (2.7) as a one-dimensional Neumann problem for the function W_0 in the variable ζ_j so that y is regarded as a parameter. The compatibility condition in this problem reads as

$$\int_{-H_j}^{0} F_0(y,\zeta)\,d\zeta + G_0(y) - G_H = 0$$

and converts into

$$\int_{-hH_0}^{0} \partial_\zeta^2 W_0(y,\zeta_{0\pm})\,dz = hH_0\partial_\zeta W_0(y,0)\,,\quad y \in \mathrm{Y}_\pm.$$

On the other hand, by (2.5),

$$\int_{-hH_0}^{0} \partial_\zeta^2 W_0(y,\zeta_{0\pm})\,dz = -hH_0\partial_y^2 w_0(y)$$

for $y \in \mathrm{Y}_{\pm}$, hence, using (2.6), (2.7) we get the following differential equation for w_0:

$$-H_0\partial_y^2 w_0(y) = \Lambda^0 w_0(y), \quad y \in \mathrm{Y}. \tag{2.8}$$

If $j = 1, \dots, N$, we derive an equation for w_j in the same way, except that the homogeneous Neumann condition (1.9) is used instead of (1.10) so that G_0 is omitted. As a result we get the equations

$$-H_j\partial_y^2 w_j(y) = 0 \quad \text{for } j = 1, \dots, N\,, \quad y \in \mathrm{Y}. \tag{2.9}$$

As for the boundary conditions associated with (2.8), (2.9), the outer expansion does not contribute to the behaviour of the ansatz near $y = \pm 1/2$ hence, all w_j must satisfy the quasiperiodic boundary conditions

$$w_j(1/2) = e^{i\theta} w_j(-1/2), \qquad \partial_y w_j(1/2) = e^{i\theta}\partial_y w_j(-1/2). \tag{2.10}$$

In addition, due to the leading term of the outer expansion (2.1), we require that for all $j = 0, \dots, N$ there holds

$$w_j(\pm\ell) = a. \tag{2.11}$$

This condition connects all Equations (2.8) and (2.9).

2.3 | Boundary layer phenomenon

Near the points $P_{j\pm} = \big(\pm\ell, d_j\big)$ the narrow canals $Q^h_{j\pm}$, $j = 0, \dots, N$, are joined with the large container Ω. The geometry is thus crucially different from that of the isolated container, and there arises boundary layer effects, which influence the solutions U of (1.8)–(1.12). In the framework of the method of matched asymptotic expansions, these effects are described by the inner expansions

$$U^h\big(\xi^{j\pm}\big) = v^0_{j\pm}\big(\xi^{j\pm}\big) + hv'_{j\pm}\big(\xi^{j\pm}\big) + \cdots \tag{2.12}$$

where $v^0_{j\pm} = v^{0,\theta}_{j\pm,k}$ and $v'_{j\pm} = v'^{\theta}_{j\pm,k}$ and we use the stretched coordinates

$$\xi^{j\pm} = \Big(\xi^{j\pm}_1, \xi^{j\pm}_2\Big) = \big(\eta_{j\pm}, \zeta_j\big) = \big(h^{-1}(\pm y - \ell), h^{-1}\big(z - d_j\big)\big). \tag{2.13}$$

For $j = 0, \dots, N$, the coordinate dilation $x \mapsto \xi^{j\pm}$ and formal substitution $h = 0$ transform the singularly perturbed domain Ω^h into the unbounded one $\Xi_j = \mathbb{K}_j \cup \mathbb{P}_j$, where the quadrants, half-spaces and strips are denoted by

$$\begin{aligned}
\mathbb{K}_0 &= \big\{\xi \in \mathbb{R}^2 \,:\, \xi_1 < 0, \xi_2 < 0\big\},\\
\mathbb{K}_j &= \big\{\xi \in \mathbb{R}^2 \,:\, \xi_1 < 0\big\} \text{ for } j = 1, \dots, N,\\
\mathbb{P}_j &= \big\{\xi \in \mathbb{R}^2 \,:\, \xi_1 \geq 0, \xi_2 \in (-H_j, 0)\big\} \text{ for } j = 0, \dots, N,
\end{aligned}$$

see Fig. 3.

The functions $v^0_{j\pm}$ and $v'_{j\pm}$ of (2.12) satisfy the homogeneous Neumann problem

$$\begin{aligned}
-\Delta_\xi v(\xi) &= 0, \ \xi \in \Xi_j,\\
\partial_{\nu(\xi)} v(\xi) &= 0, \ \xi \in \partial\Xi_j,
\end{aligned} \tag{2.14}$$

which comes directly from (1.8), (1.9), while the Steklov condition (1.10) turns according to (2.13) and (2.3) into

$$\partial_z U^h - \Lambda U^h = h^{-1}\partial_{\zeta_0} U^0 - h\Lambda^0 U^0 + \cdots$$

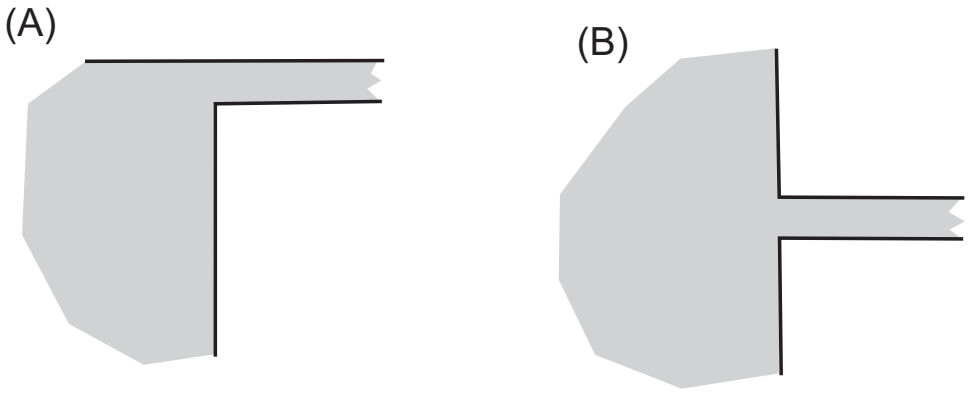

FIGURE 3 The streched domains a) Ξ_0 and b) Ξ_j, $j = 1, \dots, N$

so that the term $h^2\Lambda^0 U^0$ disappears in the limit after multiplication by h and the homogeneous Neumann condition occurs again.

We obtain from the expansion (2.2) in the canal $Q^h_{j\pm}$ that

$$\begin{aligned} U^h(y,\zeta_j) &= w_j(\pm\ell) + (y \mp \ell)\partial_y w_j(\pm\ell) + \cdots \\ &= w_j(\pm\ell) \pm h\eta_{j\pm}\partial_y w_j(\pm\ell) + \cdots . \end{aligned} \tag{2.15}$$

Looking at (2.15) we observe that the terms of the inner expansion (2.12) must behave linearly in the strip outlets $\mathbb{P}_j$. Let us list such solutions of (2.14). The first one is evident: the constant function, denoted by $V^0_{j\pm} = 1$. The second solution $V^1_{j\pm}$ must grow as $\pm H_j^{-1}\eta_{j\pm}$ in $\mathbb{P}_j$. Since the flux in the strip outlet

$$\lim_{R\to+\infty} \int_{-H_j}^{0} \frac{\partial V^1_{j\pm}}{\partial \eta}(R,\zeta)\, d\zeta = \pm 1$$

does not vanish, the flux in the angular outlet $\mathbb{K}_j$ is nonzero, too. This leads to the decompositions

$$V^1_{0\pm}(\xi^{0\pm}) = \pm\frac{2}{\pi}\ln\frac{1}{\varrho_{0\pm}} \pm C_0 + O\left(\frac{1}{\varrho_{0\pm}}\right),\ \varrho_{0\pm} \to +\infty \text{ in } \mathbb{K}_0, \tag{2.16}$$

$$V^1_{j\pm}(\xi^{p\pm}) = \pm\frac{1}{\pi}\ln\frac{1}{\varrho_{j\pm}} \pm C + O\left(\frac{1}{\varrho_{j\pm}}\right),\ \varrho_{j\pm} \to +\infty \text{ in } \mathbb{K}_j,\ j = 1, \dots, N, \tag{2.17}$$

where $\varrho_{j\pm} = |\xi^{j\pm}|$ for all j. Notice that the numbers $\pi/2$ and π in (2.16) and (2.17) are nothing but the angles of opening of $\mathbb{K}_0$ and $\mathbb{K}_p$, respectively.

A basic result in harmonic analysis assures the existence of the solutions $V^1_{j\pm} = -V^1_{j\mp}$, and their uniqueness follows from the requirement

$$V^1_{j\pm}(\xi^{j\pm}) = \pm H_j^{-1}\eta_{j\pm} + O\big(e^{-H_j\eta_{j\pm}/\pi}\big),\ \ \eta_{j\pm} \to +\infty \text{ in } \mathbb{P}_j,$$

since the constant is annulled here.

Comparing the expansions (2.12) and (2.15) in the canal $Q^h_{j\pm}$, the matching procedure gives us

$$v^0_{j\pm}(\xi) = w_j(\pm\ell)V^0_{j\pm}(\xi) = w_j(\pm\ell), \tag{2.18}$$

$$v'_{j\pm}(\xi) = \pm H_j\partial_y w_j(\pm\ell)V^1_{j\pm}(\xi) + c^h_{j,\ell}, \tag{2.19}$$

where the constant $c^h_{j,\ell}$ does not affect our formal analysis, cf. Remark 2.1. Taking into account (2.18), (2.19) and recalling (2.16), (2.17) we see that near the points $\big(\pm\ell, -d_j\big)$ and inside the container Ω there holds

$$U^h(x) = w_j(\pm\ell) \pm h\frac{1+\delta_{j,0}}{\pi} H_j \partial_y w_j(\pm\ell) \ln\frac{1}{\varrho_{j\pm}} + c^h_{j\pm} + \cdots \tag{2.20}$$

with the Kronecker delta $\delta_{j,0}$, for all $j = 0, \dots, N$.

Remark 2.1. We have $\ln\varrho_{j\pm} = \ln r_{j\pm} - \ln h$, where $r_{j\pm}$ is the distance between the points x and $\big(\pm\ell_j, -d_j\big)$. The factor $\ln h$ in (2.20) can be hidden into the term $c^h_{j\pm}$ so that the constant

$$c'_{j\pm} = c^h_{j\pm} \pm \pi^{-1}\big(1+\delta_{j,0}\big) H_j \partial_y w_j(\pm\ell) \ln h$$

becomes independent of the large parameter $|\ln h|$ and can be fixed at the next step of the asymptotic procedure. □

Comparing (2.20) and the outer expansion (2.1) in Ω, we conclude that matching at the level $1 = h^0$ yields the relation (2.11), where $j = 0, \dots, N$ and a is a constant, while matching at the level h requires the following behavior of the correction term, when $|\big(y \pm \ell, z - d_j\big)|$ approaches 0:

$$U'(x) = \pm\frac{1+\delta_{j,0}}{\pi} H_j \partial_y w_j(\pm\ell) \ln\frac{1}{r_{j\pm}} + O(1)\,. \tag{2.21}$$

2.4 | Outer expansion in the container

The detached logarithmic terms in (2.21) can be interpreted as Poisson kernels and in this way the correction term U' in the ansatz (2.1) for U^h is obtained as the solution of the following Neumann problem in Ω, which is to be understood in the sense of distribution theory:

$$-\Delta U'(x) = 0, \quad x \in \Omega, \tag{2.22}$$

$$\partial_z U'(x) = \Lambda^0 a, \quad x \in \Gamma, \tag{2.23}$$

$$\partial_\nu U'(x) = \sum_{\pm}\sum_{j=0}^{N} \pm\delta_{P_{j\pm}} H_j \partial_y w_j(\pm\ell), \quad x \in \Sigma. \tag{2.24}$$

Here, δ_b denotes the Dirac mass at the point b of a one-dimensional manifold, namely the boundary curve Σ.

The compatibility condition $\int_{\partial\Omega} \partial_\nu U'\, ds = 0$ in the Neumann problem (2.22)–(2.24) leads to the relation

$$2\ell\Lambda^0 a + \sum_{j=0}^{N} H_j\big(\partial_y w_j(\ell) - \partial_y w_j(-\ell)\big) = 0. \tag{2.25}$$

To describe the solution of (2.22)–(2.24), we note that the boundary of Ω coincides with a line segment in a neighbourhood of every $P_{j\pm}$ with $j \geq 1$, but the two points $P_{0\pm}$ are corners of Ω. This leads to the observation that, given a constant $a \in \mathbb{C}$ such that (2.25) holds, the problem (2.22)–(2.24) has a (harmonic) solution U' in Ω,

$$U'(x) = \sum_{\pm}\sum_{j=0}^{N} \frac{K_{j\pm}}{\pi} \log\big(|x - P_{j\pm}|\big) + \widetilde{U}, \tag{2.26}$$

where

$$K_{j\pm} = \pm \frac{H_j}{1+\delta_{j,0}} \partial_y w_j(\pm \ell) \text{ for } j = 0, \dots, N \tag{2.27}$$

and the harmonic function $\tilde{U}$ in Ω satisfies

$$\sup_{x\in\Omega} \left|\widetilde{U}(x)\right| \le C \inf_{j\pm} \left|x - P_{j\pm}\right| \ , \ \sup_{x\in\Omega} \left|\nabla \widetilde{U}(x)\right| \le C. \tag{2.28}$$

The form of the singularities (2.26) at $P_{j\pm}$, $j \ge 1$, can be deduced from basic distribution theory, namely, in the space of distributions on the one-dimensional space of z-axis there holds

$$\frac{\partial}{\partial_y} \ln(|x + (\varepsilon, 0)|) = \frac{\varepsilon}{|x + (\varepsilon, 0)|^2} \to \pi \delta_0 \ \text{ as } \varepsilon \to 0$$

where δ_0 is the Dirac measure at 0. However, the corner points $P_{0\pm}$ are more complicated, and the asymptotic form of the solution in their vicinity as well as the estimates (2.28) are determined by the theory of elliptic boundary problems in corner and conical domains (see [8, 14] and, e.g., [21, Ch. 2, Sect. 3.6]).

3 | LIMIT PROBLEM AND ITS EIGENVALUES

Equations (2.8) and (2.9) with boundary conditions (2.10) and (2.11), together with Equation (2.25), constitute the so-called limit problem. As this problem concerns functions which are constant in Ω, its variational formulation is defined in the space

$$\begin{aligned} \mathcal{H}_\theta(\mathrm{Y}) = \Big\{ \vec{w} = (w_0, \dots, w_N) \in H^1(\mathrm{Y})^{N+1} \ : \ & w_j(1/2) = e^{i\theta} w_j(-1/2) \text{ and} \\ & \exists\, w_\bullet \in \mathbb{C} \text{ such that } w_j(\ell) = w_j(-\ell) = w_\bullet \ \forall\, j = 0, \dots, N \Big\}. \end{aligned} \tag{3.1}$$

The variational problem, for the unknown $\vec{w} \in \mathcal{H}_\theta(\mathrm{Y})$, is obtained by integrating (2.8), (2.9), and taking into account (2.10), (2.11) and (2.25):

$$\sum_{j=0}^{N} \int_{\mathrm{Y}} \partial_y w_j(y) \partial_j v_j(y)\, dy = \Lambda^0 \int_{\mathrm{Y}} w_0(y) v_0(y)\, dy + 2\ell(N+1)\Lambda^0 w_\bullet v_\bullet \ \ \forall\, \vec{v} \in \mathcal{H}_\theta(\mathrm{Y}). \tag{3.2}$$

The problem (2.8)–(2.11) can be solved explicitly for a fixed a in the sense that the eigenvalues Λ^0 are determined as solutions of a transcendental equation. We need to derive this equation and also prove results on the possible values of the solutions in order to establish the existence of spectral gaps. Due to the linearity of Equations (2.8)–(2.10) we see that a of (2.11) can be considered as a normalization constant; it becomes fixed via the normalization just after (3.9).

The solution w_0 of (2.8) has the expression

$$w_0(y) = \begin{cases} A e^{iH_0^{-1}\Lambda^0 y} + B e^{-iH_0^{-1}\Lambda^0 y} & \text{in } \mathrm{Y}_-, \\ A e^{i(\theta - H_0^{-1}\Lambda^0)} e^{iH_0^{-1}\Lambda^0 y} + B e^{i(\theta - H_0^{-1}\Lambda^0)} e^{-iH_0^{-1}\Lambda^0 y} & \text{in } \mathrm{Y}_+, \end{cases} \tag{3.3}$$

where A, B are obtained imposing condition (2.10):

$$A = \frac{e^{i(\theta + H_0^{-1}\Lambda^0(1-\ell))} - e^{iH_0^{-1}\Lambda^0 \ell}}{i2e^{i\theta} \sin(H_0^{-1}\Lambda^0(1-2\ell))}, \quad B = \frac{e^{-iH_0^{-1}\Lambda^0 \ell} - e^{i(\theta - H_0^{-1}\Lambda^0(1-\ell))}}{i2e^{i\theta} \sin(H_0^{-1}\Lambda^0(1-2\ell))}.$$

The solutions w_j, $j \geq 1$, of (2.9), (2.11) with $a = 1$ are given by

$$w_j(y) = \begin{cases} \dfrac{1 - e^{-i\theta}}{1 - 2\ell}(y + \ell) + 1 & \text{in } \mathrm{Y}_-, \\ \dfrac{1 - e^{-i\theta}}{1 - 2\ell}(y - \ell)e^{i\theta} + 1 & \text{in } \mathrm{Y}_+. \end{cases} \tag{3.4}$$

Note that w_j does not depend on j and, in particular,

$$\partial_y w_j(\ell) - \partial_y w_j(-\ell) = \frac{2\cos\theta - 2}{1 - 2\ell}. \tag{3.5}$$

Replacing the solutions (3.3)–(3.5) into (2.25), we obtain the following transcendental equation which implicitly expresses the dependence of $\Lambda^0 = \Lambda_k^0(\theta)$ on θ:

$$\frac{\ell\left(\Lambda^0\right)^2}{H_0} + \Lambda^0 \frac{\cos\theta - \cos\left(H_0^{-1}\Lambda^0(1 - 2\ell)\right)}{\sin\left(H_0^{-1}\Lambda^0(1 - 2\ell)\right)} + \frac{\cos\theta - 1}{1 - 2\ell}\sum_{j=1}^{N} H_j = 0. \tag{3.6}$$

Notice that according to the above derivation of the equation (3.6), we only take into account its positive solutions Λ_0. The following observation can be proven by an elementary argument.

Lemma 3.1. *Given $\theta \in [0, 2\pi]$, the positive solutions of Equation (3.6) form an increasing unbounded sequence.*

Proof. We first remark that the set of solutions of (3.6) does not have finite accumulation points. Indeed, it suffices to consider points $\Lambda^0 = P \in (0, +\infty)$ such that $H_0^{-1}\Lambda^0(1 - 2\ell) \neq j\pi$ for any $j \in \mathbb{N}_0$ (so that the denominator in (3.6) is non-zero). Then, for a fixed θ, the expression on the left-hand side of (3.6) is a real analytic function F_P of Λ^0 in a neighborhood U_P of P, and F_P does not vanish identically in U_P, which can be seen directly from its expression in (3.6). By well known properties of analytic functions or power series, the point P cannot be an accumulation point of zeros of F_P, which proves the claim.

In order to show that there exist infinitely many solutions, we first fix $\theta \in (0, \pi/2]$, hence, $\cos\theta \in [0, 1)$, and let $\Lambda^0 \geq 1$. Then, (3.6) is equivalent to

$$b_1\Lambda^0 + \frac{b_3(\theta)}{\Lambda^0} = \frac{\cos(b_2\Lambda^0) - \cos\theta}{\sin(b_2\Lambda^0)}, \tag{3.7}$$

where b_1 and b_2 are nonzero constants and $b_3(\theta)$ is a number uniformly bounded with respect to θ. Let us consider any $m \in \mathbb{N}$ so large that on the interval

$$J_m := \left[\frac{1}{b_2}2\pi m, \frac{1}{b_2}(\theta + 2\pi m)\right] \ni \Lambda^0 \tag{3.8}$$

the value of the left-hand side of (3.7) is at least 1. Then, the value of the function $\Lambda^0 \mapsto \cos\left(b_2\Lambda^0\right) - \cos\theta$ decreases monotonely on J_m from some number $\delta(\theta) > 0$ to 0, and on the same interval, the value of the function $\Lambda^0 \mapsto \sin\left(b_2\Lambda^0\right)$ increases monotonely from 0 to some number $\delta'(\theta) > 0$. This shows the right-hand side of (3.7) is a continuous function of Λ^0 in the interior of J_m, the values of which decrease monotonely from $+\infty$ to 0. The left-hand side of (3.7) defines a continuous function on J_m, the values of which stay on some compact interval contained in $[1, +\infty)$, by assumption. By Rolle's theorem, the equation must have a solution in the interval (3.8).

Similar arguments apply to all other cases $\theta \in (\pi/2, 2\pi)$. If $\theta = 0$ so that $\cos\theta = 1$, Equation (3.6) reduces to

$$a\Lambda^0 = \frac{\cos(b_2\Lambda^0) - 1}{\sin(b_2\Lambda^0)}.$$

Using the above reasoning one easily finds a solution in a neighborhood of every point $b_2^{-1}(2\pi m + \pi)$, where $\cos(b_2\Lambda^0) = -1$. □

A solution Λ^0 of (3.6) is an eigenvalue of the limit problem with finite multiplicity. For every k we denote by

$$\vec{w}_k(\theta) = \vec{w}_k = \left(w_{k,j}\right)_{j=1}^{N} \in \mathcal{H}_\theta(\mathrm{Y}) \tag{3.9}$$

the corresponding eigenvector, which is the solution of (2.8)–(2.11) constructed in (3.3)–(3.4). Since this eigenvector is uniquely determined, we deduce that every eigenvalue Λ^0 is simple. Thus, according to Lemma 3.1, we can order them into an increasing sequence

$$0 < \Lambda_0^0(\theta) < \Lambda_1^0(\theta) < \ldots < \Lambda_k^0(\theta) < \ldots \to +\infty. \tag{3.10}$$

By using standard results in the operator theory in Hilbert spaces, we make the eigenfunctions $\vec{w}_k(\theta)$ into an orthonormal sequence in the space $L^2(\mathrm{Y})^{N+1}$.

Remark 3.2. We will need the observation that for any eigenfunction $\vec{w}_k(\theta)$ we have $\|w_{k,0}; L^2(\mathrm{Y})\| \geq c > 0$ for a constant independent of θ. This follows from the form of the solutions (3.3) and (3.4). In more detail, given $j = 1, \ldots, N$, we see from the explicit expression (3.4) that the modulus $|w_\bullet|$ of the common boundary value is not larger than than a constant times $\|w_{k,j}; L^2(\mathrm{Y})\|$. Similarly, the form of the solution (3.3) shows that $\|w_{k,0}; L^2(\mathrm{Y})\| \geq c|w_\bullet|$. The assertion follows from the normalization $\|\vec{w}_k(\theta); L^2(\mathrm{Y})^{N+1}\| = 1$.

We now turn to the case where only the upper canal exists ($N = 0$) and show that there are infinitely many disjoint compact intervals which do not intersect the set of the values $\Lambda_k^0(\theta)$. Indeed, in this case Equation (3.6) can be written as

$$t = A\frac{\cos t - \cos\theta}{\sin t}, \tag{3.11}$$

where $t = \Lambda^0(1 - 2\ell)/H_0$ and $A = (1 - 2\ell)/\ell$.

Lemma 3.3. *Let $N = 0$, and let H_0, ℓ be given as in Section 1.2. Then, there exists $\delta_0 \in (0, \pi)$ such that Equation (3.11) does not have a solution t belonging to any interval $[2\pi m - \delta_0, 2\pi m)$, $m = 1, 2, 3, \ldots$, for any $\theta \in [0, 2\pi]$.*

Proof. Let us denote $\lambda = \cos\theta \in [-1, 1]$ and $t = 2\pi m - \delta$ for some $m = 1, 2, \ldots$ and $0 < \delta < \pi$. We choose $\delta_0 > 0$ so small that

$$\delta_0 < \frac{1}{2}\frac{\pi}{1 + A/2}, \tag{3.12}$$

and $\delta/2 \leq \sin\delta \leq \delta$ and $\cos\delta \geq 1 - \delta^2/2$ for all $\delta \in (0, \delta_0]$. Since $\sin t = -\sin\delta$ and $\cos t = \cos\delta$, we obtain that (3.11) is equivalent to

$$\delta\sin\delta = A\cos\delta - A\lambda + 2\pi m\sin\delta. \tag{3.13}$$

Here we have by (3.12)

$$\delta\sin\delta \leq \delta^2 < \frac{\delta}{2}\frac{\pi}{1 + A/2} \tag{3.14}$$

and

$$\begin{aligned} A\cos\delta - A\lambda + 2\pi m\sin\delta &\geq A(1 - \lambda) - \frac{A\delta^2}{2} + \pi m\delta \\ &\geq \delta\Big(\pi - \frac{A\delta}{2}\Big) > \delta\Big(\pi - \frac{A}{2}\frac{\pi}{1 + A/2}\Big) = \delta\frac{\pi}{1 + A/2}, \end{aligned} \tag{3.15}$$

we see that (3.13) and thus (3.11), (3.6) cannot happen for $t \in [2\pi m - \delta_0, 2\pi m)$. □

Let us then consider the general case $N > 0$. Using the same notation as in (3.11), Equation (3.6) reads now as

$$t = A\frac{\cos t - \cos\theta}{\sin t} + (1-\cos\theta)\frac{\widetilde{H}}{t}, \tag{3.16}$$

where

$$\widetilde{H} = \frac{(1-2\ell)\sum_{j=1}^{N} H_j}{\ell H_0} > 0.$$

Lemma 3.4. *Let $N > 0$, and let H_0, ℓ be given as in Section 1.2. Then, there exist $\delta_0 \in (0,\pi)$ and $m_0 \in \mathbb{N}$ such that Equation (3.11) does not have a solution t belonging to any interval $[2\pi m - \delta_0, 2\pi m)$, where $m \in \mathbb{N}$ with $m \geq m_0$, for any $\theta \in [0, 2\pi]$.*

This follows by a simple modification of the proof of the previous lemma. Namely, the term $(1-\cos\theta)\widetilde{H}/t$ in (3.16) causes to the right hand side of Equation (3.13) a new term, the modulus of which is $O(1/t)$ and which thus is smaller than $\delta\pi/(4(1+A/2))$ for large enough t. Hence, an argument similar to (3.14)–(3.15) still applies.

Although we have not exactly defined the essential spectrum $\varsigma^0_{\mathrm{ess}}$ of the limit problem, let us denote

$$\varsigma^0_{\mathrm{ess}} = \bigcup_{k=1}^{\infty} \bigcup_{\theta\in[0,2\pi)} \{\Lambda^0_k(\theta)\}. \tag{3.17}$$

By Lemma 3.1, the set $\varsigma^0_{\mathrm{ess}} \subset \mathbb{R}^+_0$ is unbounded. Thus, $\varsigma^0_{\mathrm{ess}}$ contains infinitely many "gaps" as explained in the following result, which is a direct consequence of Lemmas 3.3 and 3.4.

Corollary 3.5. *There are infinitely many disjoint compact intervals $[a_k, b_k]$ such that*

$$0 < a_1 < b_1 < \ldots < a_k < b_k < \ldots \to +\infty$$

and $\varsigma^0_{\mathrm{ess}} \cap [a_k, b_k] = \emptyset$ as well as $\varsigma^0_{\mathrm{ess}} \cap (b_k, a_{k+1}) \neq \emptyset$ for all $k \in \mathbb{N}$.

4 | APPROXIMATING NEAR-EIGENFUNCTIONS

In this section we present a formula for the near-eigenfunctions $\mathcal{U}^h = \mathcal{U}^{h,\theta}_k$, which will be used to approximate the eigenfunctions $U^{h,\theta}_k$, see (1.18) and the convention for the notation in the beginning of Section 2. Accordingly, for every $j = 0, \ldots, N$ we choose C^∞-cut-off functions $\chi^h_{j\pm} : Q^h_j \to [0,1]$ which are constant in the z-direction, such that, for $(y,z) \in Q^h_j$,

$$\chi^h_{j+}(y,z) = \begin{cases} 1\,, & \text{if } \ell \leq y \leq \ell + h, \\ 0\,, & \text{if } \ell + 2h \leq y \leq 1/2 \text{ or } y \leq 0, \end{cases} \tag{4.1}$$

and then set $\chi^h_{j-}(y,z) = \chi^h_{j+}(-y,z)$ for $(y,z) \in Q^h_j$. Moreover, we choose a C^∞-cut-off function $X^h : \Omega \to [0,1]$ such that for all $(y,z) \in \Omega$,

$$X^h(y,z) = \begin{cases} 0\,, & \text{if } \left|(y,z) - P_{j\pm}\right| \leq h \text{ for some } j = 0, \ldots, N \text{ and } \pm, \\ 1\,, & \text{if } \left|(y,z) - P_{j\pm}\right| \geq 2h \text{ for all } j = 0, \ldots, N \text{ and } \pm\,; \end{cases}$$

we can require that

$$\partial_\nu X^h = 0 \text{ on } \partial\Omega.$$

We also may assume that the functions satisfy the estimates

$$\left|\nabla \chi^h_{j\pm}\right| \le Ch^{-1}\,, \quad \left|\nabla^2 \chi^h_{j\pm}\right| \le Ch^{-2} \tag{4.2}$$

in their domains of definitions, and the same estimates for X^h as well.

Now, let $k \in \mathbb{N}$ and $\theta \in [0, 2\pi)$ and thus also the limit problem eigenvalue $\Lambda^0_k(\theta) = \Lambda^0$ and its eigenvector $\overrightarrow{w_k}(\theta) = \left(w_{k,j}\right)_{j=0}^N =: \left(w_j\right)_{j=0}^N$ be fixed, see Lemma 3.1 and (3.9). Let us define the approximating near-eigenfunctions $\mathcal{U}^h = \mathcal{U}^{h,\theta}_k$ by

$$\mathcal{U}^h = \begin{cases} a + hX^h\Big(U' - \sum\limits_{\pm}\sum\limits_{j=0}^{N} \frac{K_{j\pm}}{\pi}\log h\Big) + h\widetilde{W} & \text{in } \Omega, \\ \sum\limits_{\pm} \pi^{-1}\big(\pm\widetilde{H}_j\big)\Big(\big(1-\chi^h_{j\pm}\big)w_j + \chi^h_{j\pm} w_j(\pm\ell)\Big) + h\widetilde{W} & \text{in } Q^h_j,\ j = 0, \dots, N, \end{cases} \tag{4.3}$$

where a is the common boundary value $w_\bullet$ for the normalized eigenfunction $\overrightarrow{w_k}$ of the limit problem, (3.9), and $\widetilde{H}_j = H_j/\big(1+\delta_{j,0}\big)$, while the function $\widetilde{W} := \widetilde{W}^\theta_k$ describes the boundary layer and it reads as

$$\widetilde{W}(x) = \sum_{\pm}\sum_{j=0}^{N}\left(\frac{K_{j\pm}}{\pi}V^1_{j\pm}(\xi^{j\pm}) - \frac{K_{j\pm}}{\pi}\log|\xi^{j\pm}|X^h(x) - \frac{1}{h}\frac{K_{j\pm}}{\pi}(y \mp \ell)\big(1-\chi^h_{j\pm}(y)\big)\right) \tag{4.4}$$

where $\xi^{j\pm} = \big(h^{-1}(\pm y - \ell), h^{-1}\big(z - d_j\big)\big)$ (see (2.13)) and $V^1_{j\pm}$ are the harmonic functions defined around (2.16)–(2.17). As a consequence of (2.16), (2.17), (4.4), the function $\widetilde{W}$ satisfies

$$\left|\widetilde{W}(x)\right| \le Ch \text{ for } x \in \Omega \text{ with } \left|x - P_{j\pm}\right| \ge R \tag{4.5}$$

$$\left|\widetilde{W}(x)\right| \le Ce^{-1/h} \text{ for } x \in Q_{j\pm} \text{ with } \left|x - P_{j\pm}\right| \ge R, \tag{4.6}$$

for some constant R, $0 < R < \frac{1}{2} - \ell$, independent of h.

We will need the following lower bound valid for small enough $h > 0$,

$$\left\|\mathcal{U}^{h,\theta}_k; \mathcal{H}^h\right\| \ge c_{k,\Omega}, \tag{4.7}$$

where the constant $c_{k,\Omega} > 0$ may depend on k and Ω but not on h or θ. To get estimate (4.7) we use the trace inequality $\left\|\mathcal{U}^{h,\theta}_k; L^2(\Gamma)\right\| \le C\left\|\mathcal{U}^{h,\theta}_k; \mathcal{H}^h\right\|$, observe that the $L^2(\mathrm{Y})$-norm of the Q^h_0-component of $\mathcal{U}^{h,\theta}_k$ is an $O(h)$-perturbation of $2\widetilde{H}_0\pi^{-1}\left\|w_{k,0}, L^2(\mathrm{Y})\right\|$ and that this norm is bounded from below by a positive constant, according to Remark 3.2.

5 | MAIN RESULT ON THE ASYMPTOTIC POSITION OF SPECTRAL BANDS

We now state our main result concerning the asymptotic position of the spectral bands. It also justifies the formal asymptotic analysis of the previous sections and motivates the use of the approximate eigenfunctions (4.3). The result yields the existence of spectral gaps in the essential spectrum (1.1). We recall that the eigenvalues $\Lambda^h_k(\theta)$ of the model problem were defined in (1.18), and those of the limit problem $\Lambda^0_k(\theta)$ in Lemma 3.1 and (3.10). The final step of the proof will be completed only in the last section.

Theorem 5.1. *For every $k \ge 1$ there exists a constant C_k such that, for each $\theta \in [0, 2\pi)$,*

$$\left|\Lambda^h_k(\theta) - h\Lambda^0_k(\theta)\right| < C_k h^{3/2}. \tag{5.1}$$

Theorem 5.1 and Corollary 3.5, see also (1.1) and (3.17), imply:

Theorem 5.2. *Given a positive integer N there exists $h_N > 0$ such that the spectrum $\varsigma_{\rm ess}$ of the linear water-wave problem (1.5)–(1.7) in Π^h has at least N gaps, if $h \in (0, h_N)$.*

We start the proof of Theorem 5.1 by stating a classical lemma on near eigenvalues and eigenvectors (see [26] and, e.g., [3, Ch. 6]).

Lemma 5.3. *Let $\mathcal{T}$ be a self-adjoint, positive, and compact operator in a Hilbert space $\mathcal{H}$. If a number $\widehat{\mu} > 0$ and an element $\widehat{\mathcal{V}} \in \mathcal{H}$ satisfy $\|\widehat{\mathcal{V}}; \mathcal{H}\| = 1$ and $\|\mathcal{T}\widehat{\mathcal{V}} - \widehat{\mu}\widehat{\mathcal{V}}; \mathcal{H}\| =: \tau \in (0, \widehat{\mu})$, then the segment $[\widehat{\mu} - \tau, \widehat{\mu} + \tau]$ contains at least one eigenvalue of $\mathcal{T}$. Moreover, for every $\rho \in (\tau, \widehat{\mu})$ we have*

$$\left\| \widehat{\mathcal{V}} - \sum_k a_k \mathcal{W}_k \right\| \le 2\frac{\tau}{\rho} \tag{5.2}$$

where the sum is taken over all eigenvalues of the operator $\mathcal{T}$ contained in the interval $[\widehat{\mu} - \rho, \widehat{\mu} + \rho]$ with multiplicities taken into account, and $\mathcal{W}_k$ are the corresponding eigenvectors orthonormalized with respect to each other in $\mathcal{H}$, while the coefficients a_k are normalized by $\sum_k |a_k|^2 = 1$.

It will also be useful to formulate an intermediate step in the proof of the main result. Note that if $\Lambda_k^0(\theta)$ is a simple eigenvalue in the following lemma, then $\ell = k$ holds for these indices.

Lemma 5.4. *Given k and $\theta \in [0, 2\pi)$, let the function $\mathcal{U}_\ell^h(\theta) =: \mathcal{U}^h$ be defined as in (4.3) by using any of the eigenfunctions $\overrightarrow{w_\ell}(\theta)$, (3.9), of the eigenvalue $\Lambda_k^0(\theta)$ in (3.10). Then, for some $h' > 0$ there holds*

$$\left\| \mathcal{B}^h \mathcal{U}^h - \mu^h \mathcal{U}^h; \mathcal{H}^h \right\| \le C h^{3/2} \quad \forall\, h \in (0, h'), \tag{5.3}$$

where $\mu^h = \mu_k^h(\theta) = 1/\big(1 + h\Lambda_k^0(\theta)\big)$.

Proof of Theorem 5.1. Here, given k we will find an eigenvalue $\Lambda_j^h(\theta)$ with an unspecified index j, such that (5.1) holds with this eigenvalue in the place of $\Lambda_k^h(\theta)$. We will show only in Section 6 that $j = k$, because this conclusion will require some additional arguments.

So, let now k and θ and thus also the number $\Lambda_k^0(\theta)$ be fixed. We aim to apply Lemma 5.3 to the operator $(\mathcal{T} =)\ \mathcal{B}^h(\theta) : \mathcal{H}^h \to \mathcal{H}^h (= \mathcal{H})$ of (1.15). Let us define an approximate eigenvalue and eigenvector of $\mathcal{B}^h(\theta)$ by

$$(\widehat{\mu} =)\ \mu_k^h(\theta) = 1/\big(1 + h\Lambda_k^0(\theta)\big), \tag{5.4}$$

$$(\widehat{\mathcal{V}} =)\ \mathcal{V}_k^h(\theta) = \left\| \mathcal{U}_k^h(\theta); \mathcal{H}^h(\theta) \right\|^{-1} \mathcal{U}_k^h(\theta) =: c_{\mathcal{U}}^{-1} \mathcal{U}_k^h, \tag{5.5}$$

where $\mathcal{U}_k^h(\theta)$ is defined as in (4.3) by using any of the eigenvectors $\overrightarrow{w_\ell}(\theta)$, (3.9), of the eigenvalue $\Lambda_k^0(\theta)$. Definition (5.4) is motivated by the relation (1.16). From now on, we mostly suppress the indices k and θ from the notation and denote $\mu_k^h(\theta) =: \mu^h$, $\mathcal{V}_k^h(\theta) =: \mathcal{V}^h$, $\Lambda_k^0(\theta) =: \Lambda^0$ and so on. Our aim is to show that τ of Lemma 5.3 can be chosen as small as $C_k h^{3/2}$:

$$\tau = \left\| \mathcal{B}^h \mathcal{V}^h - \mu^h \mathcal{V}^h; \mathcal{H}^h \right\| \le C h^{3/2}; \tag{5.6}$$

in other words, we prove Lemma 5.4. Then, Lemma 5.3 gives an eigenvalue M^h of $\mathcal{B}^h$ with the estimate

$$\left| M^h - \mu^h \right| \le C_k h^{3/2}.$$

Using (5.4) and (1.16) this turns into an eigenvalue $\Lambda_j^h(\theta)$ of (1.8)–(1.12), for some j. As mentioned, the identity $j = k$ will be proven later. We have

$$C_k h^{3/2} \geq \left|M^h - \mu^h\right| = \left|\frac{1}{1+\Lambda_j^h(\theta)} - \frac{1}{1+h\Lambda_k^0(\theta)}\right| \tag{5.7}$$

hence,

$$\left|1+\Lambda_j^h(\theta) - \big(1+h\Lambda_k^0(\theta)\big)\right| \leq C_k h^{3/2}\big(1+\Lambda_j^h(\theta)\big)\big(1+h\Lambda_k^0(\theta)\big). \tag{5.8}$$

For $h \leq h_k$ with a small enough $h_k > 0$ we have $C_k h^{3/2}\big(1+h\Lambda_k^0(\theta)\big) \leq 1/2$ and thus, by (5.8) and the triangle inequality,

$$\left|1+\Lambda_j^h(\theta)\right| \leq 2\big(1+h\Lambda_k^0(\theta)\big)$$

so that applying (5.8) again,

$$\left|\Lambda_j^h(\theta) - h\Lambda_k^0(\theta)\right| \leq 2C_k h^{3/2}\big(1+h\Lambda_k^0(\theta)\big)^2 \leq C_k' h^{3/2}\big(1+h\Lambda_k^0(\theta)\big), \tag{5.9}$$

i.e. the claim in the beginning of the proof holds true.

Thus, as explained, we are left here with the task of proving (5.6). To this end we write, using $\mathcal{V}^h = c_{\mathcal{U}}^{-1}\mathcal{U}^h$, (1.14), (1.15), (4.7), (5.4) and the Green formula,

$$\begin{aligned}
\tau &= \sup_Z \left|\left(\mathcal{B}^h\mathcal{V}^h - \mu^h\mathcal{V}^h, Z\right)_h\right| \\
&= c_{\mathcal{U}}^{-1}\sup_Z \left|\left(\mathcal{U}^h, Z\right)_\Gamma - \mu^h\left(\mathcal{U}^h, Z\right)_\Gamma - \mu^h\left(\nabla\mathcal{U}^h, \nabla Z\right)_{\Omega^h}\right| \\
&= \mu^h c_{\mathcal{U}}^{-1}\sup_Z \left|\left(1+h\Lambda^0\right)\left(\mathcal{U}^h, Z\right)_\Gamma - \left(\mathcal{U}^h, Z\right)_\Gamma - \left(\nabla\mathcal{U}^h, \nabla Z\right)_{\Omega^h}\right| \\
&= \mu^h c_{\mathcal{U}}^{-1}\sup_Z \left|h\Lambda^0\left(\mathcal{U}^h, Z\right)_\Gamma + \left(\Delta\mathcal{U}^h, Z\right)_{\Omega^h} - \left(\partial_\nu\mathcal{U}^h, Z\right)_{\partial\Omega^h}\right|.
\end{aligned} \tag{5.10}$$

The supremum is calculated here over all functions $Z \in \mathcal{H}^h$ with norm one.

(*i*) Let us consider $\left(\Delta\mathcal{U}^h, Z\right)_{\Omega^h}$. We use the fact that U' and $V_{j\pm}^1$ are harmonic functions (see (2.22), (2.14), the text after (2.15)) and (4.4) to obtain in the subdomain Ω

$$\Delta\mathcal{U}^h = h\left[\Delta, X^h\right]\left(U' - \sum_{\pm}\sum_{j=0}^{N}\left(\frac{K_{j\pm}}{\pi}\log h - \frac{K_{j\pm}}{\pi}\log\left|\xi^{j\pm}\right|\right)\right)$$

where $[\Delta, X^h]$ denotes the commutator of the Laplacian and the pointwise multiplier operator $f \mapsto X^h f$ for $f \in \mathcal{H}^h$. Hence, $[\Delta, X^h]$ is a first order partial differential operator, the support of which (precisely, the supports of the non-constant coefficient functions) are contained in the set

$$\operatorname{supp}\nabla X^h \subset \bigcup_{j,\pm} R_{j,\pm}^h = \bigcup_{j,\pm}\left\{x \in \Omega \;:\; h \leq \left|x - P_{j\pm}\right| \leq 2h\right\}. \tag{5.11}$$

By (5.11) and properties (2.26)–(2.28), we get for $x \in \operatorname{supp}\nabla X^h \subset \Omega$

$$\begin{aligned}
\left|U'(x) - \sum_{\pm}\sum_{j=0}^{N}\frac{K_{j\pm}}{\pi}\left(\log h + \log\left|\xi^{j\pm}\right|\right)\right| &= \left|U'(x) - \sum_{\pm}\sum_{j=0}^{N}\frac{K_{j\pm}}{\pi}\log\left|x - P_{j\pm}\right|\right| \\
&\leq \sup_{x\in\operatorname{supp}\nabla X^h}\left|\widetilde{U}(x)\right| + Ch\sup_{x\in\operatorname{supp}\nabla X^h}\left|\nabla\widetilde{U}(x)\right| \leq C'h.
\end{aligned}$$

Since the modulus of the coefficients of the operator $[\Delta, X^h]$ have the upper bound $C\left(\left|\nabla X^h\right| + \left|\Delta X^h\right|\right) \le Ch^{-2}$, we obtain

$$\|\Delta \mathcal{U}; L^\infty(\Omega)\| \le C. \tag{5.12}$$

Moreover, because $\mathcal{H}^h$ embeds (by the trace theorem) into $L^4(\gamma)$ for any line segment γ included in Ω, (5.12) yields for all j and signs

$$\begin{aligned}
&\int_{\pm\ell}^{\pm\ell\mp 2h} \int_{d_j-2h}^{d_j+2h} \left|\Delta \mathcal{U}^h(y,z)\right| |Z(\pm\ell \mp 2h, z)|\, dz\, dy \\
&\quad \le \|\Delta \mathcal{U}^h; L^\infty(\Omega)\| \left(\int_{\pm\ell}^{\pm\ell\mp 2h} \int_{d_j-2h}^{d_j+2h} dz\, dy \right)^{3/4} \left(\int_{\pm\ell}^{\pm\ell\mp 2h} \int_{d_j-2h}^{d_j+2h} |Z(\pm\ell \mp 2h, z)|^4\, dz\, dy \right)^{1/4} \\
&\quad \le Ch^{3/2} \|Z; \mathcal{H}^h\| \le Ch^{3/2}.
\end{aligned}$$

Using this, (5.11) and the Cauchy–Schwartz–Bunyakowski inequality we obtain

$$\begin{aligned}
\left|\left(\Delta \mathcal{U}^h, Z\right)_\Omega\right| &\le \left| \left(\Delta \mathcal{U}^h, Z\right)_\Omega - \sum_{j,\pm} \left(\Delta \mathcal{U}^h, Z(\pm\ell \mp 2h, z)\right)_{R^h_{j,\pm}} \right| + Ch^{3/2} \\
&\le \sum_{j,\pm} \left| \int_{\pm\ell}^{\pm\ell\mp 2h} \int_{d_j-2h}^{d_j+2h} \left(\Delta \mathcal{U}^h(y,z)\right) \left(Z(y,z) - Z(\pm\ell \mp 2h, z)\right) dz\, dy \right| + Ch^{3/2} \\
&\le C' \sum_{j,\pm} \left\|\Delta \mathcal{U}^h; L^\infty(\Omega)\right\| \int_{\pm\ell}^{\pm\ell\mp 2h} \int_{d_j-2h}^{d_j+2h} \int_{y}^{\pm\ell\mp 2h} |\partial_1 Z(s,z)|\, ds\, dz\, dy + Ch^{3/2} \\
&\le 2C' h \sum_{j,\pm} \int_{d_j-2h}^{d_j+2h} \int_{\pm\ell}^{\pm\ell\mp 2h} |\nabla Z(s,z)|\, ds\, dy + Ch^{3/2} \\
&\le C'' h \left(\int_{d_j-2h}^{d_j+2h} \int_{\pm\ell}^{\pm\ell\mp 2h} ds\, dy \right)^{1/2} \left(\int_\Omega |\nabla Z|^2\, dx \right)^{1/2} + Ch^{3/2} \le C''' h^{3/2},
\end{aligned} \tag{5.13}$$

where also $\|Z; \mathcal{H}^h\| \le 1$ was taken into account.

In the subdomains Q_j^h, where $j = 0, \dots, N$, we write using the equalities (2.9) and the Kronecker delta

$$\begin{aligned}
\left(\Delta \mathcal{U}^h, Z\right)_{Q_j^h} &= \frac{\delta_{0,j} \widetilde{H}_j}{\pi} \left(\partial_y^2 w_0, (1 - \chi_{j\pm}) Z\right)_{Q_0^h} \\
&\quad - \frac{\widetilde{H}_j}{\pi} \sum_{\pm} \left(\left[\partial_y^2, \chi_{j\pm}\right] (w_j - w_j(\pm\ell)), Z \right)_{Q_j^h} + h\left(\Delta \widetilde{W}, Z\right)_{Q_j^h}.
\end{aligned} \tag{5.14}$$

Then, (4.4) and the harmonicity of $V^1_{j\pm}$ imply

$$h(\Delta\widetilde{W},Z)_{Q_j^h} = -\sum_{\pm}\frac{K_{j\pm}}{\pi}\Big(\partial_y^2\big((y\mp\ell)(1-\chi_{j\pm}(y))\big),Z\Big)_{Q_j^h}$$
$$= -\sum_{\pm}\frac{K_{j\pm}}{\pi}\big([\partial_y^2,\chi_{j\pm}](y\mp\ell),Z\big)_{Q_j^h}. \tag{5.15}$$

The smoothness of w_j and its Taylor expansion near the point $y=\pm\ell$ yield

$$\big|w_j(y)-w_j(\pm\ell)-(y\mp\ell)\partial_y w_j(\pm\ell)\big| \le Ch^2 \tag{5.16}$$

for y belonging to the supports of $\nabla\chi_{j\pm}$ and $\Delta\chi_{j\pm}$, because these are of diameter $O(h)$. From (5.14), (5.15) and

$$K_{j\pm} = \pm\widetilde{H}_j\,\partial_y w_j(\pm\ell)$$

(see (2.27), (4.3)) we obtain

$$\Big|(\Delta\mathcal{U}^h,Z)_{Q_j^h} - \big(\partial_y^2 w_0,(1-\chi_{j\pm})Z\big)_{Q_j^h}\Big|$$
$$\le \Big|\big([\partial_y^2,\chi_{j\pm}](w_j-w_j(\pm\ell)),Z\big)_{Q_j^h} + h(\Delta\widetilde{W},Z)_{Q_j^h}\Big|$$
$$= \sum_{\pm}\widetilde{H}_j\Big|\Big([\partial_y^2,\chi_{j\pm}]\big(w_j-w_j(\pm\ell)-(y\mp\ell)\partial_y w_j(\pm\ell)\big),Z\Big)_{Q_j^h}\Big| \le Ch^{3/2}, \tag{5.17}$$

since the left factor in the inner product in (5.17) is a bounded function due to (5.16) and $|\nabla\chi_{j\pm}| + |\nabla^2\chi_{j\pm}| \le Ch^{-2}$, and the right factor Z can be treated by an argument similar to (5.13).

Combining (5.13) and (5.17) we thus get

$$(\Delta\mathcal{U}^h,Z)_{\Omega^h} = \big(\widetilde{H}_0\partial_y^2 w_0,(1-\chi_{0\pm})Z\big)_{Q_0^h} + O\big(h^{3/2}\big). \tag{5.18}$$

(*ii*) Let us next consider the term $h\Lambda^0(\mathcal{U}^h,Z)_\Gamma$ in (5.10). Here, we remind that the definition of the norm of $\mathcal{H}^h$ implies

$$\big\|Z;L^2(\Gamma\cap\overline{\Omega})\big\| \le C, \tag{5.19}$$

and then we apply (2.26), (2.28) to get

$$h\Lambda^0\Big|\Big(hX^h\Big(U'-\sum_{\pm}\sum_{j=0}^{N}\frac{K_{j\pm}}{\pi}\log h\Big),Z\Big)_\Gamma\Big|$$
$$\le Ch^2|\log h|\Lambda^0\big\|\widetilde{U};L^\infty(\Omega)\big\|\,\big\|Z;L^2(\Gamma\cap\overline{\Omega})\big\| \le C'h^2|\log h|. \tag{5.20}$$

We also have $\|\widetilde{W};L^2(\Gamma\cap\overline{\Omega})\| \le C|\log h|$, so that the Cauchy–Schwartz-inequality and (5.19), (5.20) yield

$$h\Lambda^0(\mathcal{U}^h,Z)_{\Gamma\cap\overline{\Omega}} = h\Lambda^0(a,Z)_{\Gamma\cap\overline{\Omega}} + O\big(h^2|\log h|\big).$$

The contribution of the term with $\widetilde{W}$ is of order $O\big(h^2|\log h|\big)$ also in the subdomain Q_0^h. Moreover,

$$h\Lambda^0\big|(\chi^h_{0\pm}w_0(\pm\ell),Z)_{\Gamma\cap\overline{Q_0^h}}\big| \le Ch^2$$

due to (5.19) and the size of the support of the cut-off-function. We thus obtain

$$h\Lambda^0\big(\mathcal{U}^h,Z\big)_\Gamma = h\Lambda^0(a,Z)_{\Gamma\cap\overline{\Omega}} + h\Lambda^0\big((1-\chi^h_{0\pm})w_0,Z\big)_{\Gamma\cap\overline{Q^h_0}} + O\big(h^2|\log h|\big) \tag{5.21}$$

since the subdomains Q^h_j, $j\geq 1$, do not contribute to this term.

(*iii*) We consider the term $(\partial_\nu\mathcal{U}^h,Z)_{\partial\Omega^h}$. We have, by (2.23), (2.24),

$$\begin{aligned}\big(\partial_\nu\big(hX^hU'\big),Z\big)_{\partial\Omega^h\cap\overline{\Omega}} &= \big(hX^h\partial_\nu U',Z\big)_{\Gamma\cap\overline{\Omega}}\\ &= h\Lambda^0\big(a,Z\big)_{\Gamma\cap\overline{\Omega}} - \Lambda^0\big(h\big(1-X^h\big)a,Z\big)_{\Gamma\cap\overline{\Omega}}\\ &= h\Lambda^0\big(a,Z\big)_{\Gamma\cap\overline{\Omega}} + O\big(h^{3/2}\big),\end{aligned}$$

where the contribution of (2.24) vanishes, since the Dirac masses are concentrated outside the support of X^h, and we used

$$\big|\big(h\big(1-X^h\big)a,Z\big)_{\Gamma\cap\overline{\Omega}}\big| \leq Ch\big|\mathrm{supp}\big(1-X^h\big)\big|^{1/2}\big\|Z;L^2(\Gamma)\big\| \leq C'h^{3/2}.$$

To estimate the contribution of the term with $\widetilde{W}$ we remark that by definition, $W\big(\xi_{j\pm},\eta_{j\pm}\big)$ satisfies the homogeneous Neumann conditions at least everywhere in $\partial\Omega^h\cap B\big(P_{j\pm},R\big)$ for some positive constant R independent of h. Evidently, the same holds also for the functions $\log|(\xi_{j\pm},\eta_{j\pm})|$ in the sets $\partial\Omega\cap B\big(P_{j\pm},R\big)$. Clearly, the functions $y\big(1-\chi^h_{0\pm}\big)$ satisfy the homogeneous Neumann conditions in the sets $\partial Q^h_{j\pm}\cap B\big(P_{j\pm},R\big)$.

Summarizing these observations we get

$$h\big(\partial_\nu\widetilde{W},Z\big)_{\partial\Omega^h} = h\big(\partial_\nu\widetilde{W},Z\big)_{\partial\Omega^h\setminus\cup B(P_{j\pm},R)}.$$

This is at most $O\big(h^2\big)$ by (4.5), (4.6).

These estimates yield

$$\big(\partial_\nu\mathcal{U}^h,Z\big)_{\partial\Omega^h} = h\Lambda^0\big(a,Z\big)_{\Gamma\cap\overline{\Omega}} + O\big(h^{3/2}\big). \tag{5.22}$$

(*iv*) Let us turn to the final estimate. According to (5.18), (5.21) and (5.22), the expression on the right of (5.10) is bounded by

$$C\Big|\big(\partial_y^2w_0,\big(1-\chi^h_{0\pm}\big)Z\big)_{Q^h_0} + h\Lambda^0\big(w_0,\big(1-\chi^h_{0\pm}\big)Z\big)_{\Gamma\cap\overline{Q^h_0}}\Big| + O\big(h^{3/2}\big). \tag{5.23}$$

We have

$$\begin{aligned}\big(\partial_y^2w_0,Z\big)_{Q^h_0} &= \int_\ell^{1/2}\int_{-h}^{0}\partial_y^2w_0(y)Z(y,z)\,dz\,dy\\ &= \int_{-h}^{0}\int_\ell^{1/2}\partial_y^2w_0(y)Z(y,0)\,dy\,dz + \int_{-h}^{0}\int_\ell^{1/2}\partial_y^2w_0(y)\big(Z(y,z)-Z(y,0)\big)\,dy\,dz.\end{aligned} \tag{5.24}$$

Here, the integrand of the first term is constant in the z-variable so that the integral equals, by (2.8),

$$h\Big(\partial_y^2w_0,\big(1-\chi^h_{0\pm}\big)Z\Big)_{\Gamma\cap\overline{Q^h_0}} = -h\Lambda^0\big(w_0,\big(1-\chi^h_{0\pm}\big)Z\big)_{\Gamma\cap\overline{Q^h_0}}$$

so that the second term in (5.23) is cancelled and we are left with the second term on the right of (5.24). This is small, as seen by the estimate

$$\int_{-h}^{0}\int_{\ell}^{1/2}\left|\partial_y^2 w_0(y)\right||Z(y,z)-Z(y,0)|\,dy\,dz$$

$$\le \left\|\partial_y^2 w_0; L^\infty\left(Q_0^h\right)\right\|\int_{-h}^{0}\int_{\ell}^{1/2}\int_{0}^{z}|\partial_z Z(y,\zeta)|\,d\zeta\,dy\,dz$$

$$\le \left\|\partial_y^2 w_0; L^\infty\left(Q_0^h\right)\right\|\int_{-h}^{0} h^{1/2}\left\|\nabla Z; L^2\left(Q_0^h\right)\right\|dz \le Ch^{3/2},$$

where the Cauchy–Schwartz–Bunyakowski inequality was used to obtain the factor $h^{1/2}$. Here we used that the function w_0'' is uniformly bounded, as a consequence of (2.8), (2.9).

This completes the proof of the bound (5.6). □

6 | CONVERGENCE THEOREM AND THE END OF THE PROOF OF THEOREM 5.1

To finish the proof of Theorem 5.1, i.e., to show that the indices j and k are the same in the proof of the previous section, we need the following result.

Theorem 6.1. *Given $k \ge 1$ and $\theta \in [0, 2\pi)$, there is a decreasing sequence $\{h_m\}_{m=1}^{\infty}$ of positive numbers such that*

$$h_m^{-1}\Lambda_k^{h_m}(\theta)$$

converges to the eigenvalue $\Lambda_k^0(\theta)$ of the limit problem (see Lemma 3.1). Moreover, the eigenfunctions $U_k^{h_m,\theta}$ converge in the norm of $L^2(\mathrm{Y})$ to an eigenfunction V of the limit problem corresponding to the eigenvalue $\Lambda_k^0(\theta)$. The sequence $\{h_m\}_{m=1}^{\infty}$ can be chosen to be the same for any finite number of indices k, and it can also picked up as a subsequence of any given positive, decreasing sequence tending to 0.

Proof. We start by the remark that for every k one can find positive constants C_k and $\widetilde{h}_k$ such that,

$$\Lambda_k^h(\theta) \le C_k h \ \text{ for all } \theta \text{ and } h \in \left(0, \widetilde{h}_k\right]. \tag{6.1}$$

Namely, fixing k and θ, we found in the proof of Theorem 5.1 for all $j \in \mathbb{N}$ an index $\ell \in \mathbb{N}$ such that $\left|h\Lambda_j^0(\theta) - \Lambda_\ell^h(\theta)\right| \le C_j h^{3/2}$. This estimate cannot hold for the same ℓ and two different numbers $\Lambda_j^0(\theta)$ and $\Lambda_{j'}^0(\theta)$ (just by the triangle inequality), hence for a large enough j we must have $\ell \ge k$. This yields

$$\Lambda_k^h(\theta) \le \Lambda_\ell^h(\theta) \le C_j h\Lambda_j^0(\theta).$$

By Lemma 3.1, the function $\theta \mapsto \Lambda_j^0(\theta)$ is continuous and thus bounded on the compact interval $[0, 2\pi]$ so that the bound on the right-hand side can be made independent of θ. This proves (6.1).

We fix $k \in \mathbb{N}$ and $\theta \in [0, 2\pi)$ and, for every $h > 0$, consider the eigenpair $\left\{\Lambda_k^h(\theta), U_k^{h,\theta}\right\} =: \left\{\Lambda^h, U^h\right\}$ of (1.8)–(1.12); for the sake of clarity we again mostly suppress the indices θ and k from the notation.

Using (6.1) and compactness we find a sequence $\{h_m\}_{k=1}^{\infty}$ converging to 0 such that for some number $\widetilde{\Lambda} := \widetilde{\Lambda}_k(\theta) \in [0, +\infty)$,

$$h_m^{-1}\Lambda^{h_m} \to \widetilde{\Lambda} \ \text{ as } k \to +\infty; \tag{6.2}$$

here, the same sequence $\{h_m\}_{k=1}^{\infty}$ can be taken in the case several k are considered simultaneously, or the sequence could be defined as a subsequence of any given sequence converging to 0 (see the last statements of the theorem). The same is true also in the later steps of the proof so that we do not comment these aspects any more.

For every $j = 0, \dots, N$, let $\psi_j \in C^\infty(\overline{\mathrm{Y}})$ be a function of one variable such that for some constant $b = b_n(\theta) \in \mathbb{C}$, independent of j,

$$\psi_j\Big(-\frac{1}{2}\Big) = e^{-i\theta}\psi_j\Big(\frac{1}{2}\Big)\ ,\ \ \psi_j(-\ell) = \psi_j(\ell) = b.$$

We define for every h a test function $\Psi^h \in \mathcal{H}_\theta(\mathrm{Y})$ in $\overline{\Omega^h}$ by

$$\Psi^h(x) = \begin{cases} \psi_j(y), & \text{if } x = (y,z) \in \overline{Q_j^h}, \\ b, & \text{for } x \in \overline{\Omega}, \end{cases}$$

which naturally can also be considered as belonging to the space $\mathcal{H}^h$. Let us substitute this into (1.13):

$$h^{-1}\sum_{j=0}^{N}\int\limits_{Q_j^h}\big(\partial_y U^h(x)\big)\overline{\partial_y\psi_j(y)}\,dx - h^{-1}\Lambda^h\int\limits_{\mathrm{Y}} U^h(y,0)\overline{\psi_0(y)}\,dy = h^{-1}\Lambda^h\int\limits_{\Gamma\setminus\mathrm{Y}} U^h(y,0)\,\overline{b}\,dy. \tag{6.3}$$

On the other hand, choosing U^h for V^h in (1.13) and taking into account the normalization made below (1.18) yield

$$\Big\|\nabla U^h; L^2\big(\Omega^h\big)\Big\|^2 = \Lambda^h\Big\|U^h; L^2\big(\Gamma\big)\Big\|^2 = \Lambda^h \le ch \tag{6.4}$$

and thus of course

$$\Big\|U^h; L^2\big(\Omega^h\big)\Big\|^2 \le c \tag{6.5}$$

with a constant $c = c_k > 0$ independent of h or θ. Let us write

$$U^h(x) = U^h_\bullet + U^h_\perp(x)\,,\ \text{ where } U^h_\bullet = \frac{1}{|\Omega|}\int\limits_{\Omega} U^h\,dx \text{ and } \int\limits_{\Omega} U^h_\perp\,dx = 0. \tag{6.6}$$

By its definition, the Poincaré inequality applies to $U^h_\perp$ in Ω, and using (6.4) we obtain

$$\begin{aligned}\Big\|U^h_\perp; L^2(\Omega)\Big\|^2 &\le c\Big\|\nabla U^h_\perp; L^2(\Omega)\Big\|^2 = c\Big\|\nabla U^h; L^2(\Omega)\Big\|^2 \\ &\le c\Big\|\nabla U^h; L^2\big(\Omega^h\big)\Big\|^2 \le c'h,\end{aligned} \tag{6.7}$$

so that combining the trace inequality with this implies

$$\Big\|U^h_\perp; L^2(\Gamma\setminus\mathrm{Y})\Big\| \le c\Big\|U^h_\perp; H^1(\Omega)\Big\| \le c'h. \tag{6.8}$$

Now, the sequence $\big(U^{h_m}\big)_{m=1}^{\infty}$ is bounded in $H^1(\Omega)$, since the gradient sequence is bounded in $L^2(\Omega)$ by (6.4) and both component sequences determined by (6.6) are bounded in $L^2(\Omega)$ by (6.5) and (6.7). Moreover, the embedding $H^1(\Omega) \hookrightarrow L^2(\Gamma\setminus\mathrm{Y})$ is compact so $\big(U^{h_m}\big)_{m=1}^{\infty}$ has a subsequence convergent in $L^2(\Gamma\setminus\mathrm{Y})$ with indices still denoted by $\{h_m\}_{m=1}^{\infty}$. By (6.8), the non-constant component $\big(U^{h_m}_\perp\big)_{m=1}^{\infty}$ of this subsequence tends to zero in the norm of $L^2(\Gamma\setminus\mathrm{Y})$, hence, for some

constant B we have

$$U^{h_m}(\cdot, y) \to B \quad \text{as } m \to +\infty \tag{6.9}$$

in the norm of $L^2(\Gamma \setminus \mathrm{Y})$ and consequently the right-hand side of (6.3), denoted by I_R^h, satisfies

$$I_R^{h_m} \to 2\widetilde{\Lambda}\ell\, B\, \overline{b} \quad \text{as } m \to +\infty$$

where $\widetilde{\Lambda}$ is as in (6.2).

To treat the left-hand side I_L^h of (6.3) we let $j \in \{0, \dots, N\}$ and introduce the stretched coordinates $\zeta_j = h^{-1}(z - d_j)$ so that $\zeta_j \in (-H_j, 0)$ for $(y, z) \in Q_j^h$. We define the stretched domain $\mathbf{Q}_j$ and the function $\mathbf{U}_j^h$ on it by

$$\mathbf{Q}_j = \{(y, \zeta_j) \ : \ (y, z) \in Q_j^h\}, \ \ \mathbf{U}_j^h(y, \zeta_j) := U^h(y, z) \text{ for } z \in Q_j^h \tag{6.10}$$

and also the stretched domains (see (1.3))

$$\mathbf{G}_j = \{(y, \zeta_j) \ : \ (y, z) \in G_j^h\}$$

where

$$G_j^h := (-\ell, \ell) \times \sigma_j^h = (-\ell, \ell) \times (d_j - hH_j, d_j).$$

Let us consider $j = 0$. Then, by (6.4),

$$\begin{aligned} &\left\|\mathbf{U}_0^h(\cdot, 0); L(\mathrm{Y})\right\|^2 + \left\|\nabla_y \mathbf{U}_0^h; L^2(\mathbf{Q}_0)\right\|^2 + h^{-2}\left\|\partial_{\zeta_0}\mathbf{U}_0^h; L^2(\mathbf{Q}_0^h)\right\|^2 \\ &\quad = \left\|U^h(\cdot, 0); L(\mathrm{Y})\right\|^2 + h^{-1}\left\|\nabla_y U^h; L^2(Q_0^h)\right\|^2 + h^{-1}\left\|\partial_z U^h; L^2(Q_0^h)\right\|^2 \\ &\quad \le \left(1 + h^{-1}\Lambda^h\right)\left\|U^h(\cdot, 0); L^2(\mathrm{Y})\right\|^2 \le C. \end{aligned} \tag{6.11}$$

Thus, the sequence $\{\mathbf{U}_0^{h_m}\}_{m=1}^{\infty}$ is bounded in $H^1(\mathbf{Q}_0)$ (use the fundamental theorem of calculus and the smallness of $\partial_{\zeta_0}\mathbf{U}_0$, (6.11), to proceed from $L^2(\mathrm{Y})$ to $L^2(\mathbf{Q}_0)$). Using arguments similar to those above and passing to a subsequence and redefining the notation we find a sequence $\{h_m\}_{m=1}^{\infty}$ converging to 0 such that in addition to (6.9) we have

$$\mathbf{U}_0^{h_m} \to V_0 \ \text{ weakly in } H^1(\mathbf{Q}_0) \tag{6.12}$$

$$\mathbf{U}_0^{h_m}(\cdot, 0) \to V_0 \ \ \text{strongly in } L^2(\mathrm{Y}) \text{ as } m \to +\infty; \tag{6.13}$$

notice that the function $V_0 \in H^1(\mathrm{Y})$ does not depend on ζ_0, due to the coefficient h^{-2} of the ∂_{ζ_0}-term in the estimate (6.11) ($\partial_{\zeta_0}\mathbf{U}_0^h$ vanishes in the limit).

Next let us consider the terms with $j = 1, \dots, N$ of I_L^h. First, we observe that by (6.5), (6.7)

$$\begin{aligned} \left\|U^h; L^2(G_j^h)\right\|^2 &\le 2\left\|U_\bullet^h; L^2(G_j^h)\right\|^2 + 2\left\|U_\perp^h; L^2(G_j^h)\right\|^2 \\ &\le c\left(\mathrm{mes}\,(G_j^h) + h\right) \le Ch \Rightarrow \left\|\mathbf{U}_j^h; L^2(\mathbf{G}_j)\right\|^2 \le C' \end{aligned}$$

for all j. By the one dimensional Poincaré inequality, integrated with respect to ζ_j,

$$\left\|\mathbf{U}_j^h; L^2(\mathbf{Q}_j)\right\|^2 \le c\left(\left\|\partial_y \mathbf{U}_j^h; L^2(\mathbf{Q}_j \cup \mathbf{G}_j)\right\|^2 + \left\|\mathbf{U}_j^h; L^2(\mathbf{G}_j)\right\|^2\right) \le C,$$

with a constant $C = C_k > 0$ independent of θ, since the term with the derivative ∂_y can be estimated by the normalization (6.4). As in (6.6) we set

$$\mathbf{U}_j^h(y,\zeta_j) = \mathbf{U}_{j,\bullet}^h(y) + \mathbf{U}_{j,\perp}^h(y,\zeta_j)\,, \quad \text{where}$$

$$\mathbf{U}_{j,\bullet}^h = \frac{1}{|\mathbf{Q}_j \cup \mathbf{G}_j|}\int\limits_{\mathbf{Q}_j\cup\mathbf{G}_j} U^h\,dx \quad \text{and} \quad \int\limits_{\mathbf{Q}_j\cup\mathbf{G}_j} \mathbf{U}_{j,\perp}^h\,dx = 0.$$

Again, by the Poincaré inequality in $\mathbf{Q}_j \cup \mathbf{G}_j$,

$$\begin{aligned}\left\|\mathbf{U}_{j,\perp}^h; L^2(\mathbf{Q}_j\cup\mathbf{G}_j)\right\|^2 &\le c\left\|\partial_{\zeta_j}\mathbf{U}_{j,\perp}^h; L^2(\mathbf{Q}_j\cup\mathbf{G}_j)\right\|^2\\ &= c\left\|\partial_{\zeta_j}\mathbf{U}_j^h; L^2(\mathbf{Q}_j\cup\mathbf{G}_j)\right\|^2 \le ch^2,\end{aligned} \tag{6.14}$$

where the last inequality follows by scaling (6.4). Thus, using the argument (6.11) to estimate the gradient terms, the sequence $\{\mathbf{U}_j^{h_m}\}_{m=1}^\infty$ is bounded in $H^1(\mathbf{Q}_j)$ and by (6.14), the non-constant component of the sequence again vanishes in the limit. By the compactness of the embedding $H^1(\mathbf{Q}_j\cup\mathbf{G}_j) \hookrightarrow L^2(\mathbf{Q}_j\cup\mathbf{G}_j)$ we can again pass several times to subsequences, and redefining the notation we find a sequence $\{h_m\}_{m=1}^\infty$ converging to 0 such that in addition to (6.9), (6.12), (6.13) we have for all j

$$\mathbf{U}_j^{h_m} \to V_j \ \text{ weakly in } H^1(\mathbf{Q}_j), \tag{6.15}$$

$$\mathbf{U}_j^{h_m}(\cdot,0) \to V_j \ \text{ strongly in } L^2(\mathbf{Q}_j\cup\mathbf{G}_j) \ \text{ as } m\to+\infty \tag{6.16}$$

for some functions $V_j \in H^1(\mathbf{Q}_j\cup\mathbf{G}_j)$, $j = 0,\dots,N$, which again do not depend on ζ_j, because of (6.14); as Sobolev functions depending on one variable only they are continuous.

Since the last subsequence still satisfies (6.9), the boundary value of each V_j, $j = 0,\dots,N$, on the line segment $\{\pm\ell\}\times(-H_j,0)$ must be equal to the constant B, and hence these functions can be glued into a single function $V \in H^1(\Omega^h)$ by setting

$$V(x) = \begin{cases} V_j(y,0), & \text{if } x=(y,z)\in Q_j,\\ B, & \text{if } x\in\Omega.\end{cases} \tag{6.17}$$

We also have, with $\widetilde{\Lambda}$ as in (6.2),

$$I_L^{h_m} \to \sum_j H_j \int\limits_{\mathrm{Y}} (\partial_y V_j(y))\overline{\partial_y\psi(y)}\,dy - \widetilde{\Lambda}\int\limits_{\mathrm{Y}} V_j(y)\overline{\psi(y)}\,dy \text{ as } m\to+\infty.$$

The normalization $\|U^h;L^2(\Gamma)\| = 1$ and the norm convergence in (6.13), (6.16) yield

$$\|V;L^2(\mathrm{Y})\|^2 + 2|B|\ell = 1, \tag{6.18}$$

so that in particular $V \neq 0$. Formulas (6.12), (6.12), and (6.18) imply that the limits V and $\widetilde{\Lambda}$ satisfy the integral identity (3.2). Thus, the function V, (6.17), (6.18), is an eigenfunction of the limit problem (3.2) corresponding to the eigenvalue $\widetilde{\Lambda}$, (6.2). This completes the proof of Lemma 6.1.

Finally, the claimed convergence of the eigenfunctions to V follow from (6.9), the definition of $\mathbf{U}_j^h$ in (6.10), (6.13) and (6.16). □

End of the proof of Theorem 5.1. Let us fix $k \in \mathbb{N}$ and $\theta \in [0,2\pi)$ and thus also the eigenvalue $\Lambda_k^0(\theta)$; recall that its multiplicity is one, see (3.9), (3.10). We claim that for some $\hat{h} > 0$, the interval

$$\Delta_{k,\theta} = [\Lambda_k^0(\theta) - C_k, \Lambda_k^0(\theta) + C_k], \tag{6.19}$$

where $C_k = C_k(\theta) = \frac{1}{4}\min\left(\Lambda^0_k(\theta) - \Lambda^0_{k-1}(\theta), \Lambda^0_{k+1}(\theta)\Lambda^0_k(\theta)\right) > 0$, contains for all $h \in (0, \hat{h}]$ exactly one eigenvalue $\Lambda^h_j(\theta)$, with multiplicities counted.

For the proof we denote by $N(h)$ the number of the eigenvalues $\Lambda^h_j(\theta)$ of the operator $\mathcal{B}^h$ contained in the interval $\Delta_{k,\theta}$. Indeed, by what was already proved in Section 5, we have $N(h) \geq 1$ for all small enough h.

Consider first the case that the claim holds for some $\widehat{h} > 0$ and $N(h) > 1$, for infinitely many $h \in \left(0, \widehat{h}\right)$ forming a set with 0 as an accumulation point. Then, for each such h we would have $N(h)$ eigenfunctions $U^{h,\theta}_{k(p)}$, $p = 1, \dots, N(h)$, which are orthogonal to each other in $L^2(\Gamma)$, see the text after (1.18). According to Theorem 6.1 and the choice of the interval $\Delta_{k,h,\theta}$ we find a sequence $\{h_m\}_{m=1}^{\infty}$ such that

$$h_m^{-1}\Lambda^{h_m}_{k(p)}(\theta) \to \Lambda^0_k(\theta) \text{ as } m \to +\infty$$

for all $p = 1, \dots, N(h)$, and also the eigenfunctions $U^{h_m,\theta}_{k(p)}$ converge to some eigenfunctions $u^{\theta}_{k(p)}$ of the eigenvalue $\Lambda^0_k(\theta)$ in the norm of $L^2(\mathrm{Y})$, as $m \to +\infty$. Moreover, by (6.8)

$$\left\| U^{h_m,\theta}_p ; L^2(\Gamma \setminus \mathrm{Y}) \right\| \leq c h_m$$

so that the orthogonality of the N functions $U^{h_m,\theta}_p$ in $L^2(\Gamma)$ leads to the conclusion that

$$\left(u^{\theta}_{k(p)}, u^{\theta}_{k(p')}\right)_{L^2(\mathrm{Y})} = \delta_{p,p'}, \tag{6.20}$$

where we have the Kronecker delta of $p, p' = 1, \dots, N(h) \geq 2$. But (6.20) implies, by a well-known lemma on perturbations of orthonormal bases, that there exist at least two linearly independent eigenfunctions of the limit problem corresponding to $\Lambda^0_k(\theta)$, which is a contradiction. □

ACKNOWLEDGEMENTS

The third named author was partially supported by the grant 18-01-00325 of the Russian Foundation of Basic Research, by the Academy of Finland project 324219, and by Indam-Gnampa through the project U-UFMBAZ-2018-000835 during the visit in Politecnico di Torino, 2018. The fourth named author was partially supported by Indam-Gnampa through the project U2015/000910 during the visit in Politecnico di Torino.

REFERENCES

[1] A. A. Arsenév, *The existence of resonance poles and scattering resonances in the case of boundary conditions of the second and third kind*, USSR Comput. Math. Math. and Phys. **16** (1976), no. 3, 171–177.
[2] J. T. Beale, *Scattering frequencies of resonators*, Comm. Pure Appl. Math. **26** (1973), no. 4, 549–563.
[3] M. S. Birman and M. Z. Solomyak, *Spectral theory of self-adjoint operators in Hilbert space*, Reidel Publishing Company, Dordrecht, 1986.
[4] A. Gaudiello, D. Gómez, and M. E. Pérez, *Asymptotic analysis of the high frequencies for the Laplace operator in a thin T-like shaped structure*, J. Math. Pures Appl. **134** (2020), 299–327.
[5] I. M. Gelfand, *Expansion in characteristic functions of an equation with periodic coefficients*, Dokl. Akad. Nauk SSSR **73** (1950), 1117–1120. (Russian).
[6] A. M. Ilin, *Matching of asymptotic expansions of solutions of boundary-value problems*, Nauka, Moscow, 1989; English transl. in: Transl. Math. Monogr., vol. 102, Amer. Math. Soc., Providence, RI 1992.
[7] T. Kato, *Perturbation theory for linear operators*, Grundlehren Math. Wissen., Band 132, Springer-Verlag, New York, 1966.
[8] V. A. Kondratiev, *Boundary-value problems for elliptic equations in domains with conical or angular points*, Trudy Moskov. Mat. Obshch. **16** (1967), 209–292; English transl. in: Trans. Moscow Math. Soc. 16 (1967), 227–313.
[9] V. A. Kozlov, V. G. Maz'ya, and A. B. Movchan, *Asymptotic analysis of a mixed boundary value problem in a multi-structure*, Asymptot. Anal. **8** (1994), no. 2, 105–143.
[10] P. Kuchment, *Floquet theory for partial differential equations*, Birkhäuser, Basel, 1993.
[11] N. Kuznetsov, V. Maz'ya, and B. Vainberg, *Linear water waves: a mathematical approach*, Cambridge University Press, Cambridge, 2002.
[12] C. M. Linton and P. McIver, *Embedded trapped modes in water waves and acoustics*, Wave Motion **45** (2007), 16–29.
[13] V. G. Maz'ya, S. A. Nazarov, and B. A. Plamenevskii, *Asymptotic theory of elliptic boundary value problems in singularly perturbed domains*, Birkhäuser Verlag, Basel, 2000.

[14] V. G. Maz'ya and B. A. Plamenevskii, *Estimates in L_p and Hölder classes and the Miranda–Agmon maximum principle for solutions to elliptic boundary value problems in domains with singular points on the boundary*, Math. Nachr. **77** (1977), 25–82.
[15] S. A. Nazarov, *Elliptic boundary value problems with periodic coefficients in a cylinder*, Izv. Akad. Nauk SSSR. Ser. Mat. **45** (1981), no. 1, 101–112; English transl. in: Math. USSR. Izve. *18* (1982), no. 1, 89–98.
[16] S. A. Nazarov, *Junctions of singularly degenerating domains with different limit dimensions 1*, J. Math. Sci. (N.Y.) **80** (1996), no. 5, 1989–2034.
[17] S. A. Nazarov, *Junctions of singularly degenerating domains with different limit dimensions. 2*, Trudy Sem. Petrovsk., Moscow Univ. **20** (1997), 155–195; English transl. in: J. Math. Sci. **97** (1999), no. 3, 155–195.
[18] S. A. Nazarov, *Properties of spectra of boundary value problems in cylindrical and quasicylindrical domains*, Sobolev Spaces in Mathematics, vol. II (V. Maz'ya, ed.), Int. Math. Ser. (N.Y.) 9 (2008), 261–309.
[19] S. A. Nazarov, *Sufficient conditions for the existence of trapped modes in problems of the linear theory of surface waves*, Zap. Nauchn. Sem. S.-Petersburg. Otdel. Mat. Inst. Steklov (POMI) **369** (2009), 202–223.
[20] S. A. Nazarov, *Asymptotic behavior of the eigenvalues of the Steklov problem on a junction of domains of different limiting dimensions*, Comput. Math. Math. and Phys. **52** (2012), no. 1, 1574–1589.
[21] S. A. Nazarov and B. A. Plamenevskii, *Elliptic problems in domains with piecewise smooth boundaries*, Walter de Gruyter, Berlin–New York, 1994.
[22] S. A. Nazarov and J. Taskinen, *On essential and continuous spectra of the linearized water-wave problem in a finite pond*, Math. Scand. **106** (2010), 141–160.
[23] M. Reed and B. Simon, *Methods of modern mathematical physics, Vol. I, IV*, Academic Press, New York–London, 1980, 1978.
[24] M. M. Skriganov, *Geometric and arithmetic methods in the spectral theory of multidimensional periodic operators*, Trudy Math. Inst. Steklov. **171** (1985), 3–122; English transl. in: Proc. Steklov Inst. Math. *171* (1987), 1–121.
[25] M. Van Dyke, *Perturbation methods in fluid mechanics*, Appl. Math. Mech., vol. 8, Academic Press, New York–London, 1964.
[26] M. I. Visik and L. A. Ljusternik, *Regular degeneration and boundary layer of linear differential equations with small parameter*, Amer. Math. Soc. Transl. **20** (1962), 239–364.

How to cite this article: Cancedda A, Chiadó Piat V, Nazarov S A, Taskinen J. *Spectral gaps for the linear water-wave problem in a channel with thin structures*. Mathematische Nachrichten. 2022;**295:**657–682.
https://doi.org/10.1002/mana.201900500