Experimental Characterization of In-Pipe Acoustic Communication Channels Through Measurement of Pressure Transfer Functions

(Article begins on next page)

Experimental Characterization of In-Pipe Acoustic Communication Channels Through Measurement of Pressure Transfer Functions

M. Fishta, E. Raviola, F. Fiori
Dpt. of Electronics and Telecommunication
Politecnico di Torino
Torino, Italy
{markeljan.fishta, erica.raviola, franco.fiori}@polito.it

F. Calza, A. Tornaboni
Direzione Innovazione
IREN S.p.A.
Reggio Emilia, Italy
arturo.tornaboni@gruppoiren.it

***Abstract*—Communication systems based on in-pipe acoustic propagation have great potential to cover areas in which traditional infrastructure is unavailable. Characterization of the channel plays an important role in the design of any communication system. However, in case of spatially large channels, this aspect needs further investigations. In the present work, a method for the characterization of an acoustic channel is presented. This is based on the measurement of the complex transfer functions relating voltages and pressures at the channel ports. Such a technique was validated on a $75\,\mathrm{m}$ long segment of a urban water distribution pipeline. The measurements assessed the frequency selectivity of the acoustic channel and the wave propagation speed. From experimental results, the response of the acoustic channel had an overall low-pass behavior, but it showed several deep notches at low frequency.**

***Index Terms*—Channel characterization, communication in water distribution systems, noise PSD**

I. Introduction

Underwater communication systems have received increasing attention in the last decades. Such large interest has arisen as a response to the need for communication systems applied to marine research, oceanography, marine commercial operations, the offshore oil industry and defense [1]. Of particular interest is the case of in-pipe communication, in which guided propagation of acoustic waves inside a fluid-filled pipe is used to send and receive information [2]. In-pipe communication systems can be employed in industrial environments tackling issues such as the absence of traditional wired or wireless network infrastructure. In this context, such systems find applications like structure health monitoring and tracking of the operating conditions of an industrial plant. Several recent works have presented the use of existing infrastructures such as water, oil and gas distribution pipelines as acoustic communication channels [3]–[7]. The common denominator of all these works is the role played by the characterization of the communication channel in the design of the system. Channel characteristics are important for the selection of the physical components such as transducers, as well as for the design of the communication layer. Both theoretical modeling and experimental characterization of the channel have been employed in previous works. In [6] a theoretical modeling based on modal analysis is presented for straight pipes. The model is experimentally validated onto a lab scaled version of a pipeline and measurements of the voltage transfer function (VTF) of the communication system are presented. The approach followed in [5] is different, being mainly focused in demonstrating the practical realization of an acoustic communication system. The channel characterization is performed experimentally in a real-world pipeline and VTF measurement results are provided. Although previous works provide great insight in the modeling and design of these communication systems, experimental validation of the proposed strategies is performed onto reduced scale pipelines in the vast majority of cases, clashing with the nature of real-world pipelines, which have complex structures and large spatial extension. Even in those cases where experimental characterization is performed in large scale pipelines, such as [5], the procedure is plagued by other issues such as the absence of synchronous acquisition, which would allow for complex transfer function tracing, and the inability to assess the frequency response of the channel alone, without considering the transducers. This work presents a characterization method for large extension pipelines, aimed at tackling the issues presented above. The method is an extension of the classical transfer function characterization of electrical two-port networks. An electrical-acoustical analogy is drawn in order to achieve this. Building on the two-port representation, the proposed characterization system achieves the measurement of complex transfer functions onto a real-world pipeline with large spatial extension, by means of synchronous signal acquisition. The complex transfer function of the channel could be useful for building a model from experimental data by means of classical techniques such as vector fitting [8] or least squares method. Furthermore, a way is provided for isolating the pressure transfer function of the pipe in order to be able to assess the frequency behavior of the channel alone, by removing the effect of the transducers. The rest of the paper is organized as follows: a brief review

This work was supported by IREN S.p.A., Italy, under the "Data Transmission in Water Pipes" project. (Corresponding author: Markeljan Fishta).

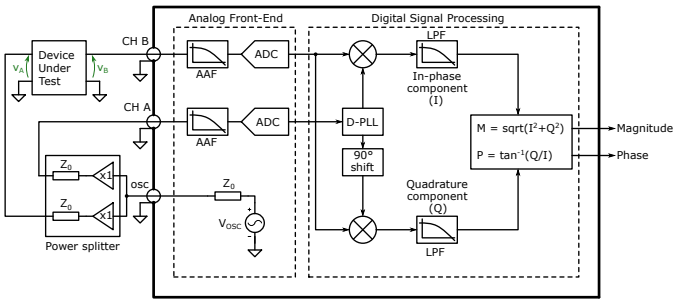

Fig. 1: Simplified block diagram of transfer function characterization of a two-port network by means of a network analyzer.

of the classical electrical network characterization is given in II, after which the proposed system is described. Experimental results from the application of the method to a practical case study are provided in III. Concluding remarks are drawn in IV.

II. Two Port Characterization Methodology

A. Voltage Complex Transfer Function Measurement

Many electronic circuits can be seen as two port systems, which perform some kind of processing onto the input signal present at one port and provide the output signal at the other port. It is common for these kind of systems to be described in terms of their frequency response or the impulse response in the time domain. Often, experimental characterization of a two-port is needed, so its frequency response has to be measured. Although both input and output quantities of interest could be either voltage or current, the most common characterization of a two port network involves the measurement of voltage transfer functions between the ports. This is achieved by applying a frequency varying stimulus and computing the complex transfer function with respect to the real frequency. In Fig. 1, a block diagram of the characterization of a two port by means of a network analyzer is shown. A two-port network to be characterized is presented as Device Under Test (DUT) and the port voltages are v_{A} and v_{B} for the input and output ports, respectively. A sinusoidal excitation is applied to the DUT and the port voltages are measured at **CHA** and **CHB**, while the excitation frequency is swept. The two voltages are filtered and digitized by two acquisition chains, which are represented schematically by the anti-aliasing filtering and ADC blocks. The acquired information is then to be converted into the required quantities, usually the magnitude and phase representation of the frequency response, or sometimes the real and imaginary part representation.

B. Proposed Transfer Function Measurement System

1) Electrical-Acoustical Equivalence: Analogies are often drawn between electrical-mechanical-acoustical systems [9] as an attempt to gain insight into complex problems by moving them into a more familiar context. This allows for the application of analysis and design methods developed for a certain domain to the other, by simply swapping the

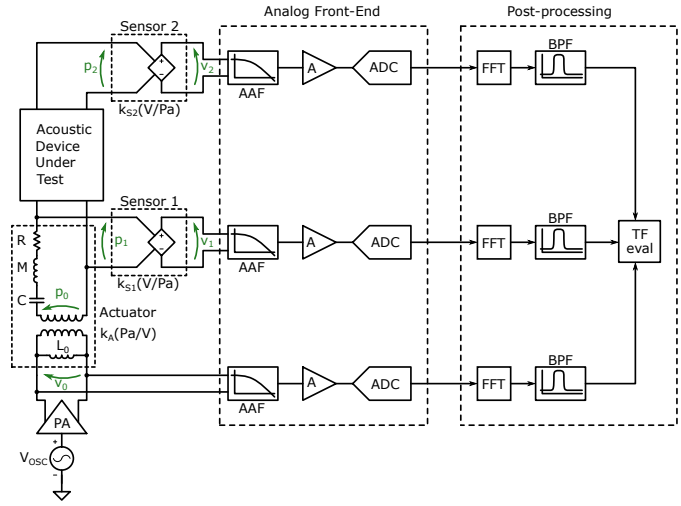

Fig. 2: Simplified block diagram representation of two-port acoustical network characterization by means of the proposed system.

involved quantities. As an example, acoustical problems are sometimes studied by building an electrical equivalent and applying circuit theory, which can result in a simplified solution process. For each domain, two quantities are identified as energy carriers and in the acoustical case these quantities are acoustic pressure $p(t)$ and flux of fluid, or volume velocity $u(t)$. Although mapping of these quantities into electrical ones can be done in two different ways, the impedance model is usually preferred, associating acoustical pressure to electrical voltage and flux of fluid to electrical current. By making use of this analogy, acoustical systems can be studied in the Laplace domain by considering the transformed quantities $P(s)$ and $U(s)$, similarly to the study of electrical systems. A water distribution plant, in which two access points for the application and sensing of pressure signals are identified, can then be represented by means of a 2x2 matrix relating the port quantities among them.

2) System View: A schematic representation of the proposed characterization setup is shown in Fig. 2, which can be seen as an extension of the one previously presented in Fig. 1. The system to be characterized is represented by the Acoustic Device Under Test (ADUT), whose port quantities are the pressures $p_1(t)$ and $p_2(t)$ at the input and output, respectively. A pressure excitation is needed in order to characterize the structure. This is achieved by means of a voltage to pressure transducer, which is represented with a transformer model and will be called actuator in the following, with transduction constant k_{A} measured in $\mathrm{V/Pa}$. The model of the actuator also includes the input inductance L_0 at the electrical port and the series resonant network at the acoustical port representing the spring compliance (C), moving mass (M) and losses (R). The generated pressure signal is

$$p_0(t) = k_{\mathrm{A}} \cdot v_0(t) \tag{1}$$

which can be different from the pressure signal at the input of the ADUT, depending on the loading effect that is experienced by the actuator. Instead, the input and output pressure variations are sensed by means of two pressure to voltage transducers, which will be called sensors, also represented by means of VCVS, with sensitivities k_{S1} and k_{S2} measured in $\mathrm{Pa/V}$. An internal impedance has not been shown in their model since the electronic circuitry used for the reading can usually have a large enough input impedance so that the loading effect is negligible. A sinusoidal voltage signal, suitably amplified is applied to the actuator, which in turn generates a pressure signal into the plant under test. The frequency of the excitation signal is swept across the range to be covered. The pressure signal at the input port gives rise to the output voltage of the first sensor,

$$v_1(t) = k_{\mathrm{S1}} \cdot p_1(t). \tag{2}$$

It also propagates through the plant and gives rise to the pressure signal at the output port, which is converted by the second sensor into the voltage

$$v_2(t) = k_{\mathrm{S2}} \cdot p_2(t). \tag{3}$$

The acquired signals can then be processed, allowing the computation of the complex frequency response for each frequency point swept by the oscillator. A simple calculation procedure based on the Discrete Fourier Transform (DFT) is proposed in order to evaluate the complex transfer function at each point.

3) Considerations on the Transfer Functions Evaluation: The proposed characterization system performs the acquisition of the voltage at the input of the actuator, besides the output of the two sensors, enabling the computation of three different transfer functions. Of particular interest are the voltage transfer function from the input of the actuator to the output of the second sensor, which can prove useful in order to make some efficiency considerations during the development of the communications system. It is given by

$$H_{\mathrm{C}}(s) = \frac{V_2(s)}{V_0(s)} \tag{4}$$

and is the transfer function considered by [5]. At the same time, another important frequency response is the pressure transfer function of the plant which can be used to assess the frequency selectivity of the pressure communication channel alone, by excluding the effect of the transducers. However, it is not always possible to precisely know the transduction factor of the actuator or evaluate the loading effect the ADUT has. The proposed characterization system allows to null the effect of the internal impedance of the actuator in the frequency response estimation. The pressure transfer function of the pipe can be computed as

$$H_{\mathrm{P}}(s) = \frac{V_2(s)}{V_1(s)} \cdot \frac{k_{\mathrm{S1}}}{k_{\mathrm{S2}}}. \tag{5}$$

which does not require the knowledge of the model parameters for actuator.

4) Characterization Procedure: The computation procedure of the complex transfer functions is described here. The basic idea is that of building a table of frequency domain points, which describe the transfer of the signal from one port of the network to the other. Based on this, the first step is that of selecting a frequency range of interest and a frequency increase step. These parameters can be chosen based on different criteria and one possible approach could be that of manually injecting few frequencies into the channel at the transmitter side and observing the received signal at the receiver side. It is understood that fluid-filled cylindrical pipes act mainly as low-pass channels [2] so, depending on the minimum level of the received signal, a maximum frequency of interest can be identified. Once the discrete frequency axis is defined, the measurement process can be carried out. First a sinusoidal signal is synthesized and applied to the actuator. After that, signal acquisition is performed on the voltages v_0, v_1 and v_2 for a certain time duration. Time duration of the acquisition is chosen such that it is compatible with the desired frequency resolution, which is

$$f_{\mathrm{res}} = \frac{1}{t_{\mathrm{ACQ}}} \tag{6}$$

where t_{ACQ} is the time length of each record. f_{res} should be chosen such that

$$q = \frac{\Delta f}{f_{\mathrm{res}}} \in (1, 2, ...) \tag{7}$$

Δf being the frequency step of the discrete-frequency axis chosen before. The sampling frequency $f_{\mathrm{S}} = \frac{1}{T_{\mathrm{S}}}$ should be chosen according to the maximum frequency of interest, and based on the Nyquist-Shannon theorem. The number of time-domain samples can be expressed as

$$N = t_{\mathrm{ACQ}} \cdot f_{\mathrm{S}} + 1. \tag{8}$$

After acquisition, signals are stored for further elaboration, the frequency of the generated signal is updated and the procedure is repeated. In the end, signal elaboration can take place and some characteristics of the channel can be computed. In particular it is possible to evaluate the propagation delay of the acoustic signal through the channel and, if the channel length is known, information on the propagation speed of the wave can be extracted. Furthermore, for each frequency point, the complex transfer function can be evaluated, which yields the magnitude and phase relationship between output and input signals, as follows. Let Node 1 be the transmitting one and Node 2 be the receiving node. The acquired voltages, at the test frequency $f_{\mathrm{m}} = f[m]$, are $v_{\mathrm{i,m}}(t)$, where $m \in (0, 1, 2, ..., M-1)$ for M test frequencies to cover and $i \in (0, 1, 2)$ is the voltage index. Although the two-port case is presented here, the method can be extended to a multi-port network in which transfer functions from one port to another are considered. The discrete time voltages can be indicated with

$$v_{\mathrm{i,m,n}} = v_{\mathrm{i,m}}[n] = v_{\mathrm{i,m}}\left(nT_{\mathrm{S}}\right) \tag{9}$$

Fig. 3: Top view of the test site with schematic representation of the water pipe and location of the nodes. The length of the two main propagation paths is highlighted. The designation PE110 is used for the identification of the pipe properties.

where T_S is the sampling time and $n \in (0, 1, 2, ..., N-1)$ is the discrete-time index. Then, for each test frequency, the Discrete Fourier Transform (DFT) [10] of both signals can be evaluated. The result are the frequency-domain sample arrays

$$V_{\mathrm{i,m,k}} = V_{\mathrm{i,m}}[k] = \sum_{n=0}^{N-1} v_{\mathrm{i,m,n}} \cdot e^{-\frac{\mathrm{j}2\pi}{N}kn} \tag{10}$$

where $k \in (0, 1, 2, ..., N)$ is the discrete-frequency index. At this point, the transfer functions at the frequency of interest can be evaluated by taking the ratio of the DFTs at the index corresponding to the test frequency

$$H_\mathrm{C}(f_\mathrm{m}) = \frac{V_{2,\mathrm{m},\bar{\mathrm{k}}}}{V_{0,\mathrm{m},\bar{\mathrm{k}}}} \in \mathbb{C} \tag{11}$$

$$H_\mathrm{P}(f_\mathrm{m}) = \frac{V_{2,\mathrm{m},\bar{\mathrm{k}}}}{V_{1,\mathrm{m},\bar{\mathrm{k}}}} \cdot \frac{k_{\mathrm{S1}}}{k_{\mathrm{S2}}} \in \mathbb{C} \tag{12}$$

where

$$\bar{k} = \frac{f_\mathrm{m}}{f_\mathrm{res}}. \tag{13}$$

III. Experimental results

A system for the characterization of a two port acoustic network was presented in the previous sections. A practical implementation and the application of the proposed technique to a real-world case study is presented here. A top view of the test site is shown in Fig. 3, where the water distribution pipeline is schematically represented by the thick white lines while the position of the two nodes is marked by the two dots. The plant under examination has a ring-like shape which is representative of the complexity of urban pipeline networks. The pipe is made of polyethylene with an external diameter of $110\,\mathrm{mm}$ and is buried in soil at a depth of around $1\,\mathrm{m}$. The two nodes are mounted onto the pipe by means of two vertical pipe sections having a length of approximately $1\,\mathrm{m}$. By looking at the pipe configuration, two main propagation paths for the acoustical signal can be identified from Node 1 to Node 2 of which the shortest has a length of $L_1 = 73\,\mathrm{m}$ while the secondary one $L_2 = 165\,\mathrm{m}$.

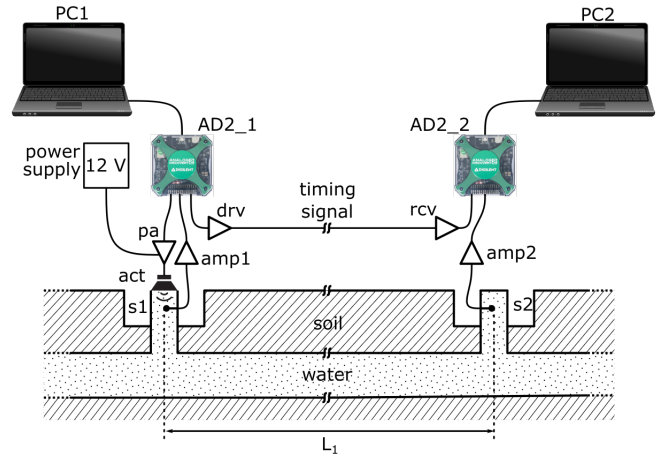

Fig. 4: Illustration of the test setup for the practical implementation of the proposed characterization system.

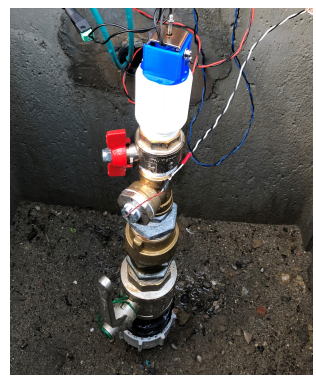

Fig. 5: Picture of the actuator mounted onto the pipe.

A. Channel Response Characterization

The practical implementation of the proposed characterization system is schematically represented in Fig. 4. Given the large spatial extension of the network under test, the measurement system has a distributed nature. This means that one part of the system is located near one node and another part is located near the other node, at a distance L_1. Node 1 is equipped with the actuator which provides the excitation signal, as can be seen in Fig. 5.

For the selection of the actuator the following consideration is done: if the excitation frequency is kept sufficiently low, the only mode that propagates is the one corresponding to a plane wave, while the others are evanescent. For a circular cross-section duct, as is the present case, the low-frequency hypothesis is satisfied if

$$\omega_\mathrm{C} < 1.841\frac{c}{a} \tag{14}$$

where c is the acoustic wave propagation speed and a is the internal radius of the pipe [11]. Using propagation speed results from [12] of $c \simeq 430\,\mathrm{m/s}$ and the internal radius of the pipe $a = 45\,\mathrm{mm}$, the critical frequency results

$$f_\mathrm{C} < 2.8\,\mathrm{kHz}. \tag{15}$$

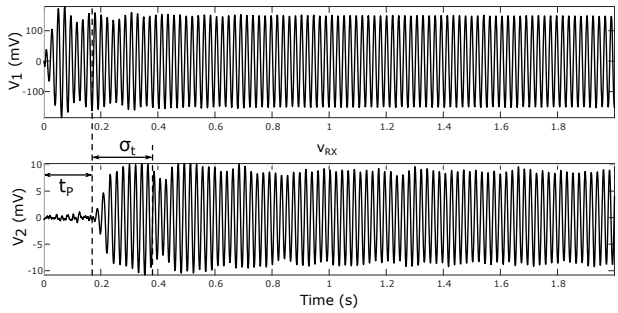

Fig. 6: Raw data from a single frequency acquisition. The waveforms are relative to the $47\,\mathrm{Hz}$ signal and represent the output of the two pressure sensors.

This frequency limitation leads to the choice of a variable reluctance transducer [13], which acts onto a circular rubber membrane aligned with the cross-section of the pipe and generates transversal pressure waves. Two hydrophones were used as pressure sensors and calibration was performed in order to compute the sensitivity ratio $\frac{k_{\mathrm{S1}}}{k_{\mathrm{S2}}}$. A multi-function PC-based instrument [14] is used both for the signal generation to the input of the audio amplifier, as well as for the acquisition of the voltages across the actuator and at the output of the conditioning amplifier. The mixed signal channels of the instrument are specified at 14 bit resolution and $100\,\mathrm{MSa/s}$ maximal sampling rate for both the analog-to-digital and the digital-to-analog conversions. At the output end of the acoustic network, a similar configuration is used, where the part relative to the actuator is missing. Simultaneous acquisition from the two nodes is achieved by means of a timing signal which is generated by the elaboration unit of Node 1 and it is conveyed through a wire to Node 2. A digital Low-Voltage Differential Signaling (LVDS) transceiver [15] is employed for the driving of the long wire and another one is employed at the receiving end for the conversion of the signal from LVDS back to logic level in order to be used as a trigger input for the acquisition. Following manual probing of the channel, a maximum measurement frequency of $200\,\mathrm{Hz}$ was chosen, above which the received signal was close to the noise floor. The minimum frequency of $40\,\mathrm{Hz}$ was chosen because of the bandwidth limitation of the transducers and the number of data points for each acquisition is limited to $N = 8000$ by the acquisition instrument. A sampling frequency of $f_{\mathrm{S}} = 2\,\mathrm{kHz}$ was then chosen as a trade-off between frequency resolution and anti-aliasing, resulting in an acquisition interval $t_{\mathrm{ACQ}} = 2\,\mathrm{s}$ and frequency resolution $f_{\mathrm{RES}} = 0.5\,\mathrm{Hz}$.

Time domain raw data for a single acquisition, relative to the $47\,\mathrm{Hz}$ frequency, are shown in Fig. 6. The presented signals are the ones received by the sensors, to which the amplification factor of the amplifiers has been removed. The propagation delay, marked as t_{P} in Fig. 6, has been estimated as

$$t_{\mathrm{P}} \simeq 170\,\mathrm{ms}. \tag{16}$$

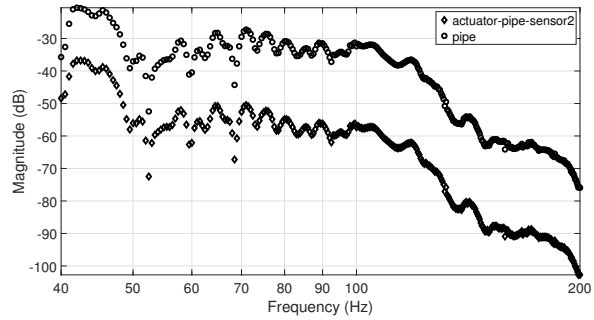

Fig. 7: Magnitude of the transfer functions $H_{\mathrm{C}}(f)$ and $H_{\mathrm{P}}(f)$. The frequency step is $0.5\,\mathrm{Hz}$.

Since the shortest path length is known in this case, the wave propagation speed can be computed as

$$c = \frac{L_1}{t_{\mathrm{P}}} \simeq 430\,\mathrm{m/s}. \tag{17}$$

This result is in good agreement with observations from [12] for buried polyethylene water pipes. A second arrival can also be seen in the received signal at node 2, which is likely due to the propagation of the signal through the longer path. The transfer functions $H_{\mathrm{C}}(s)$ and $H_{\mathrm{P}}(s)$ were computed with the aim of assessing the influence of the system components on the frequency selectivity. A comparison of the magnitude of these two functions is presented in Fig. 7. It can be understood from the plot that the frequency selectivity of the measured transfer function is largely due to the pipeline, while the cascade of the actuator and pressure sensor mainly accounts for an approximately constant attenuation. The complex transfer function of the pipe in the polar notation is shown in Fig. 8. Some observations can be made on the measured frequency response. The first and most evident one is the low-pass behavior of the pipe as an acoustic two-port. Hence it appears that, from a communication channel standpoint, the lower frequency band is more suitable for signal transmission. At the same time, it can be seen that for frequencies roughly below $100\,\mathrm{Hz}$ the pressure transfer function has an oscillatory behavior with local maxima and minima alternated. Few deep notches can also be observed at frequencies $52.5\,\mathrm{Hz}$, $59.5\,\mathrm{Hz}$ and $68.5\,\mathrm{Hz}$ with attenuation higher than $40\,\mathrm{dB}$.

B. Noise Characterization

A noise measurement campaign was carried out as well, with the aim of investigating the noise level present into the pipe. Noise was measured by means of the hydrophone at the Node 1 location during a 24 hours interval. Power Spectral Densities (PSDs) were computed for each noise record, which are shown in Fig. 9. It can be noticed that the odd harmonics of the mains' are captured by the acquisition system. Concerning noise, a near-constant envelope trend is apparent at the lower frequencies, up to around $400\,\mathrm{Hz}$, while the intensity decreases at the higher frequencies. It can also be noticed the time-dependent behavior, with the noisiest time interval between 15

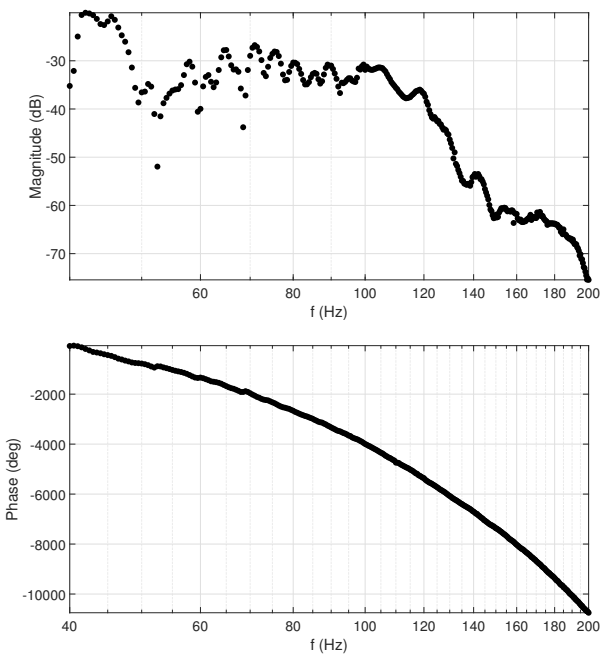

Fig. 8: Complex transfer function of the pipe (top) magnitude and (phase). It has been evaluated indirectly by assuming that the pressure sensors are identical.

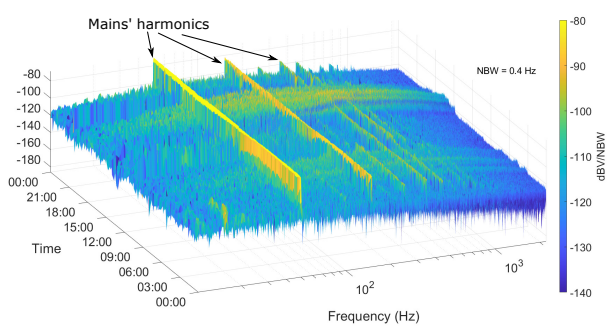

Fig. 9: Spectrogram of noise measurement during 24 hours.

and 18 o'clock. Noise measurement over a longer time period of 8 days was also carried out, aiming to extract some periodic features. Acquisitions were performed with a frequency of one every $3.5\,\mathrm{min}$. Each acquisition was collapsed into a number representing the energy of the noise, and the resulting data was analyzed through the periodogram. The output of the analysis is represented in Fig. 10. As can be seen, noise data shows a daily cycle and a slower cycle of one repetition every 2 days.

C. Results Discussion

The information obtained with this characterization procedure can be useful for the design of a communication system, based on acoustic wave propagation in water-filled pipelines. The measured frequency response can be used both for the selection of suitable transducers whose frequency response should overlap as much as possible to the one of the channel, as well as for the selection of the carrier frequency in which

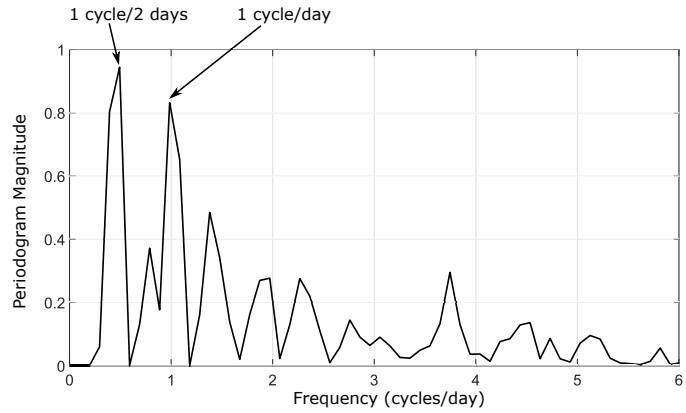

Fig. 10: Periodogram of the noise energy over 8 days. The sampling frequency was one acquisition every $3.5\,\mathrm{min}$.

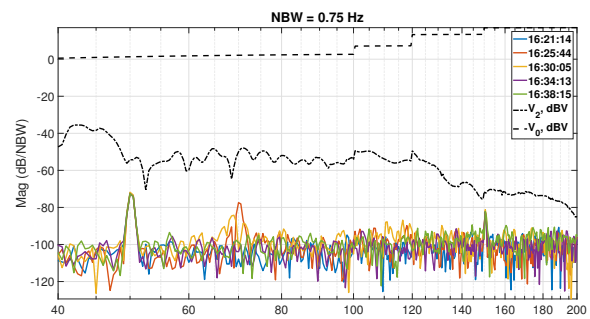

Fig. 11: Magnitude of voltages $V_0(f)$ and $V_2(f)$ overlapped to noise PSD. The labels of the noise records report the acquisition time.

frequencies corresponding to deep notches should be avoided. The notches observed in the frequency response of Fig. 8 divide the characterized interval into four possible transmission bands, with the least attenuated one $B_1 = [41\,\mathrm{Hz}, 47\,\mathrm{Hz}]$. On the other hand, the band $B_2 = [70\,\mathrm{Hz}, 100\,\mathrm{Hz}]$ is wider but also less flat, with fluctuations of around $10\,\mathrm{dB}$. When selecting the carrier frequency, besides the channel response, it is also important to consider the noise distribution as a function of frequency, as well as the energy efficiency of the system. It was seen from the spectrogram of Fig. 9 that in-pipe noise had an increased value during the final part of the day. The PSD of some of the higher magnitude noise records is shown in Fig. 11, superimposed to the magnitude of voltages $V_0(f)$ and $V_2(f)$. It can be seen that during characterization the voltage at the input of the actuator was stepped up, as the frequency increased, in order to improve the SNR at the receiver. Hence, it can be said that it is preferable to employ such an actuator in the frequency range up to $100\,\mathrm{Hz}$, where the driving voltage amplitude is smaller and the received signal amplitude is larger than at higher frequencies. The nearly flat behavior of the noise spectra can also be seen, which results in a SNR in excess of $40\,\mathrm{dB}$ at the lower frequencies, except for the notches previously observed. Assuming the use of a simple

digital modulation technique, such as binary ASK, it appears from the previous considerations that he most suitable band for the carrier frequency selection are B_1 and B_2. This choice has also to be performed according to the bandwidth of the signal to be transmitted. For simple binary digital modulations, the null-to-null signal bandwidth is [16]

$$BW = \frac{2}{T_\mathrm{b}} \tag{18}$$

where T_b is the bit duration. Signal bandwidth has to be smaller than the coherence bandwidth of the channel, which can be computed as [17]

$$B_\mathrm{c} \simeq \frac{1}{5\sigma_\mathrm{t}} \tag{19}$$

where σ_t is the delay spread of the multipath propagation and is highlighted in Fig. 6. This computation yields

$$B_\mathrm{c} \simeq \frac{1}{1\,\mathrm{s}} = 1\,\mathrm{Hz}, \tag{20}$$

which also corresponds to the maximum signal bandwidth that can be transmitted through the channel without the use of equalization. The minimum bit time can be computed as

$$T_\mathrm{b,min} = \frac{2}{B_\mathrm{c}} = 2\,\mathrm{s}, \tag{21}$$

which limits the data-rate at $0.5\,\mathrm{bps}$.

IV. Conclusions

A system for the characterization of real-world, with large spatial extension, fluid-filled pipelines was presented in this work. The aim was that of further reducing the limitations of characterization methods present in previous works. The proposed system can be seen as an extension of the classical characterization method for electrical networks in which an excitation is applied to the network and its response is measured. The main contribution of the proposed system is the ability of tracing complex transfer functions onto large, real-world structures, by means of synchronous signal acquisition at the network ports. This enables model building and communication system simulation, prior to its realization. Further, a way of isolating the pressure transfer function of the pipe by excluding the transducers was provided. An application of the proposed system to a practical case-study was shown and results of experimental measurements were provided, which can be useful for the design of a communication system using the characterized channel. Future developments will be focused on the evolution of the proposed method into a wireless one, removing cables between the ports, thus increasing flexibility. Also, more advanced modulation schemes could be explored, aiming to increase the bitrate limitation resulting from the small coherence bandwidth of the channel.

References

[1] M. Chitre, S. Shahabudeen, and M. Stojanovic, "Underwater Acoustic Communications and Networking: Recent Advances and Future Challenges," *Marine Technology Society Journal*, vol. 42, no. 1, pp. 103–116, Mar. 2008.

[2] G. Kokossalakis, "Acoustic data communication system for in-pipe wireless sensor networks," Thesis, Massachusetts Institute of Technology, 2006. [Online]. Available: https://dspace.mit.edu/handle/1721.1/34379

[3] S. Chakraborty, G. J. Saulnier, K. W. Wilt, E. Curt, H. A. Scarton, and R. B. Litman, "Low-power, low-rate ultrasonic communications system transmitting axially along a cylindrical pipe using transverse waves," *IEEE Transactions on Ultrasonics, Ferroelectrics, and Frequency Control*, vol. 62, no. 10, pp. 1788–1796, Oct. 2015.

[4] D. Wei, C. Qi, C. Huang, J. Chen, A. Song, G. Song, and M. Pan, "Riding Stress Wave: Underwater Communications Through Pipeline Networks," *IEEE Journal of Oceanic Engineering*, vol. 46, no. 4, pp. 1450–1462, Oct. 2021.

[5] K. M. Joseph, T. Watteyne, and B. Kerkez, "Awa: Using water distribution systems to transmit data: Awa: Using to Transmit Data," *Transactions on Emerging Telecommunications Technologies*, vol. 29, no. 1, p. e3219, Jan. 2018.

[6] L. Jing, Z. Li, Y. Li, and R. D. Murch, "Channel Characterization of Acoustic Waveguides Consisting of Straight Gas and Water Pipelines," *IEEE Access*, vol. 6, pp. 6807–6819, 2018.

[7] S. He, N. Wang, M. Ho, J. Zhu, and G. Song, "Design of a New Stress Wave Communication Method for Underwater Communication," *IEEE Transactions on Industrial Electronics*, vol. 68, no. 8, pp. 7370–7379, Aug. 2021.

[8] B. Gustavsen and A. Semlyen, "Rational approximation of frequency domain responses by vector fitting," *IEEE Transactions on Power Delivery*, vol. 14, no. 3, pp. 1052–1061, Jul. 1999.

[9] L. L. Beranek, *Acoustics: Sound Fields, Transducers and Vibration*, 2nd ed. Canbridge, MA: Elsevier, 2019.

[10] A. V. Oppenheim and R. W. Schafer, *Discrete-Time Signal Processing*, 3rd ed. Upper Saddle River Munich: Pearson Education, 2010.

[11] A. D. Pierce, *Acoustics: An Introduction to Its Physical Principles and Applications*. Cham: Springer International Publishing, 2019.

[12] T. Graf, T. Gisler, P. Sollberger, and O. Schaelli, "Acoustic Wave Propagation in Water Filled Buried Polyethylene Pipes," in *Proceedings of the 2014 COMSOL Conference in Cambridge*, Cambridge, 2014.

[13] J. L. Butler and C. H. Sherman, *Transducers and Arrays for Underwater Sound*, ser. Modern Acoustics and Signal Processing. Cham: Springer International Publishing, 2016.

[14] "Analog Discovery 2: 100MS/s USB Oscilloscope, Logic Analyzer and Variable Power Supply." [Online]. Available: https://digilent.com/shop/analog-discovery-2-100ms-s-usb-oscilloscope-logic-analyzer-and-variable-power-supply/

[15] "SN65LVDS180-Q1 data sheet, product information and support — TI.com." [Online]. Available: https://www.ti.com/product/SN65LVDS180-Q1?qgpn=sn65lvds180-q1#description

[16] E. McCune, *Practical Digital Wireless Signals*, 1st ed., ser. The Cambridge RF and Microwave Engineering Series. Cambridge: Cambridge Univ. Press, 2010.

[17] T. S. Rappaport, *Wireless Communications: Principles and Practice*, 2nd ed., ser. Prentice Hall Communications Engineering and Emerging Technologies Series. Upper Saddle River, NJ: Prentice Hall, 2009.