Novel digital impedance bridges for the realization of the farad from graphene quantum standards

3rd URSI AT-AP-RASC, Gran Canaria, 29 May – 3 June 2022

Novel digital impedance bridges for the realization of the farad from graphene quantum standards

Martina Marzano* (1), Yaowaret Pimsut(2,3), Mattias Kruskopf(2), Marco Kraus(2), Massimo Ortolano(4,1), Stephan Bauer(2), Ralf Behr (2) and Luca Callegaro(1)
(1) Istituto Nazionale di Ricerca Metrologica (INRIM), Torino, Italy, 10135, https://www.inrim.it/
(2) Physikalisch-Technische Bundesanstalt, Braunschweig, Germany, 38116
(3) National Institute of Metrology (Thailand), Pathum Thani, Thailand, 12120
(4) Politecnico di Torino, Torino, Italy, 10129

Abstract

In the International System of Units, a realization of the impedance units is the quantum Hall effect, a macroscopic quantum phenomenon that produces quantized resistance values. Established experiments employ individual GaAs devices [1], but research is ongoing on novel materials such as graphene, which allows the realization of the units with relaxed experimental conditions. Furthermore, novel digital impedance bridges allow the implementation of simple traceability chains. In the framework of the European EMPIR project 18SIB07 GIQS (Graphene Impedance Quantum Standards), an affordable and easy-to-operate impedance standard combining novel digital impedance bridges and graphene quantum standards has been developed. An onsite comparison of an electronic and a Josephson impedance bridges developed at INRIM (Istituto Nazionale di Ricerca Metrologica, Italy) and PTB (Physikalisch-Technische Bundesanstalt, Germany), respectively, were organized for their mutual validation and to assess their performance in the realization of the farad.
Measurements of temperature-controlled impedance standards and of a graphene quantized Hall resistance standard in the AC regime were performed with both INRIM's and PTB's bridges. The result of the comparison and the last progresses of the GIQS project are here presented.

1. Introduction

In the International System of Units (SI), the unit of electrical capacitance, the farad, can be realized directly from the quantized Hall resistance (QHR) $R_H = R_K/i$, where $R_K = h/e^2 = 25812.8074593045\ \Omega$ is the exactly defined von Klitzing constant [2]. This depends only on the Planck constant h and the elementary charge e, and i is a small integer (typically, $i = 2$). Suitable impedance bridges allow the realization of the farad from a QHR standard. The realization of the farad from a QHR standard requires specialized impedance bridges. Recently developed impedance bridges based on adjustable digital signal sources are much more flexible allow us the comparison of impedances with arbitrary phase angles and can thus be exploited for the direct realization of the farad. The aim of the European EMPIR project 18SIB07 GIQS [3] is to enable an economically efficient traceability of impedance quantities to the defining constants of the SI that can be adopted by national metrology institutes, calibration centers and industry. Graphene devices are of strong interest for the realization of electrical units since they display the quantum Hall effect at lower magnetic fields (e.g., at 5 T) and higher temperatures (e.g., at 4.2 K) than the well-established GaAs devices [4]. The operating conditions can thus be achieved with simpler and less expensive cryogenic systems. Thus, graphene based QHR can serve as affordable and easy-to-operate impedance standard which can be perfectly combined with all types of impedance bridges.

An electronic and a Josephson impedance bridges were developed by INRIM [5] and PTB [6], respectively. An onsite comparison of the bridges was organized for their mutual validation and to assess their performance in the realization of the farad. INRIM's travelling electronic impedance bridge was moved to PTB and measurements in the AC regime were performed with both bridges using the same graphene ACQHR standard developed at PTB.

2. Digital impedance bridges

A digital impedance bridge is a measuring system operating in the AC regime that allows to compare an impedance ratio with the ratio of two signals generated by an adjustable digital signal source. Figure 1 shows a principle schematic of the simplest digital impedance bridge, the two-terminal-pair digital impedance bridge. When the bridge is balanced, so that the reading of the detector D is zero, the equation $W = Z_1/Z_2 = - E_1/E_2$ holds. In a two-terminal-pair digital impedance bridge the impedances Z_1 and Z_2 are two-terminal-pair impedances defined as $Z_k^{2TP} = V_{Hk}/I_{Lk}$, where V_{Hk} is the voltage at the high terminal-pair of the k-th impedance and I_{Lk} is the current at the low terminal-pair of the k-th impedance, with the boundary condition $V_{Lk} \equiv 0$, where V_{Lk} is the voltage at the low terminal-pair of the k-th impedance. Due to

additional contact resistances at points H1, L1, H2, and L2, the accuracy of such an impedance bridge is limited.

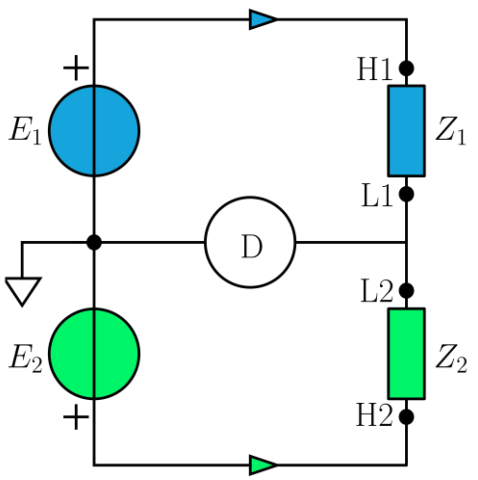

Figure 1. Principle schematic (only inner conductors) of a two-terminal-pair digital impedance bridge. When the reading of the detector D is zero, the impedance ratio equals the voltage ratio, such that $W = Z_1/Z_2 = - E_1/E_2$.

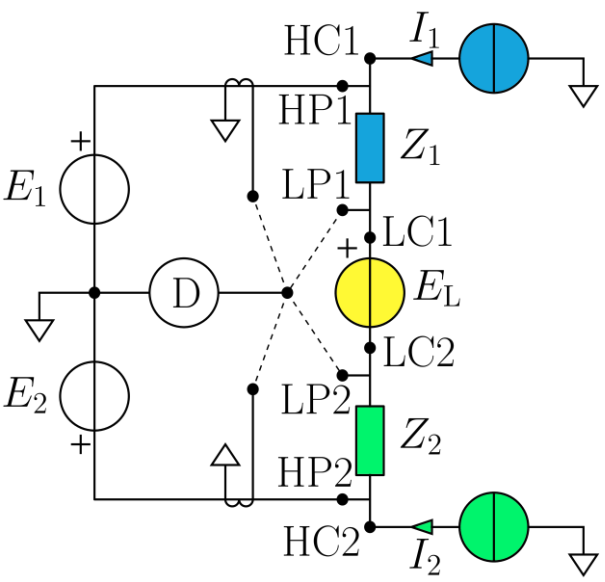

Figure 2. Principle schematic (only inner conductors) of a four-terminal-pair digital impedance bridge.

This limitation can be avoided with the four-terminal-pair digital impedance bridge, whose principle schematic is shown in Figure 2. In a four-terminal-pair digital impedance bridge the impedances Z_1 and Z_2 are four-terminal-pair impedances defined as $Z_k^{4TP} = V_{HPk}/I_{LCk}$, where V_{HPk} is the voltage at the high potential terminal-pair of the k-th impedance and I_{LCk} is the current at the low current terminal-pair of the k-th impedance, with the boundary conditions $I_{HPk} \equiv 0$, $V_{LPk} \equiv 0$ and $I_{LPk} \equiv 0$, where I_{HPk} and I_{LPk} are the currents at the high and low potential terminal-pair of the k-th impedance, and V_{LPk} is the voltage at its low potential terminal-pair. The four-terminal-pair definition of the impedances is obtained by means of auxiliary circuits (I_1, I_2 and E_L in Figure 2). When the bridge is balanced, the equation $W = Z_1/Z_2 = - E_1/E_2$ is still valid. Both the INRIM's and PTB's impedance bridges are four-terminal-pair digital impedance bridges.

2.1 INRIM's electronic impedance bridge

The INRIM's electronic impedance bridge is a four-terminal-pair impedance bridge that compares an impedance ratio with a voltage ratio generated by an electronic polyphase generator. The bridge is optimized for the direct comparison of a standard capacitor with an ACQHR standard where the impedance magnitude ratio $|W| = 1$. An auxiliary injection is added to the schematic of Figure 2 to minimize the uncertainty for the 1:1 comparison. The bridge is based on a 7-channel polyphase digital sine wave generator developed by the University of Zielona Góra, Poland: two channels produce the voltage ratio reference against which the impedance ratio is compared; three other channels are used to drive the auxiliary circuits realizing the four terminal-pair impedance definition; and one channel is used as auxiliary injection. The bridge balance is detected by a phase-sensitive detector and the bridge balance procedure is automated. The bridge balancing time is of about 20 min. The target uncertainty of the bridge is at the level of 10^{-7} or less.

2.2 PTB's Josephson impedance bridge

The PTB's Josephson impedance bridge [6] is a four-terminal-pair impedance bridge that compares the impedance ratio with a voltage ratio generated by two Josephson arbitrary waveform synthesizers (JAWS) [7]. Two Josephson series arrays are placed on a single chip and can be operated simultaneously. The JAWS measurement set-up is based on a pulse pattern generator (PPG), which delivers ternary pulses (-1 / 0 / +1) to the Josephson arrays. The chips are operated in liquid. In the PTB's Josephson impedance bridge, the ratio between the waveforms synthesized by the JAWS at arbitrary frequencies is equal to the ratio between the impedances under comparison when the bridge is balanced.

3. Mutual validation of the digital impedance bridges

The INRIM's travelling electronic impedance bridge [5] was moved to PTB to be compared with the PTB's Josephson impedance bridge. Figure 3 shows the implementation of the INRIM's and PTB's bridges in the same laboratory at PTB. A 12.9 kΩ resistance standard and a 10 nF capacitance standard were employed as temperature controlled calibrated impedance standards in the technical assessment of the bridges. A graphene ACQHR device fabricated by PTB [8] was characterized in

both the DC and AC regimes and measured with both bridges against the temperature-controlled impedance standards. The technical assessment of the bridges was performed by means of the triangle measurements shown in Figure 4 at 1233 Hz. The 10 nF capacitance standard was first calibrated directly against the graphene ACQHR and then against the 12.9 kΩ resistance standard in turn calibrated against the graphene ACQHR standard. This procedure was performed with both INRIM's and PTB's bridges. For each bridge, the results of the two calibrations were compared to evaluate the self-consistency of the bridge measurements. A mutual validation of the bridges was then performed by evaluating the discrepancies between the calibrations of the standards obtained with the two bridges. The successful comparison of the bridges resulted in discrepancies of a few parts in 10^8 with a combined type A uncertainty of the same order.

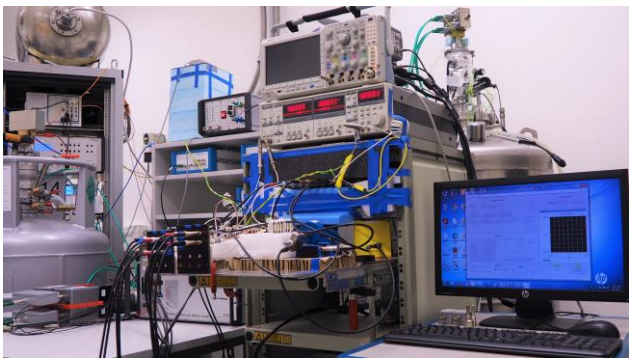

Figure 3. Implementation of the INRIM's (right) and PTB's (left) digital impedance bridges in the same laboratory at PTB. The dewars on the right and on the left are the cryogenic systems hosting the graphene ACQHR and the JAWS device, respectively.

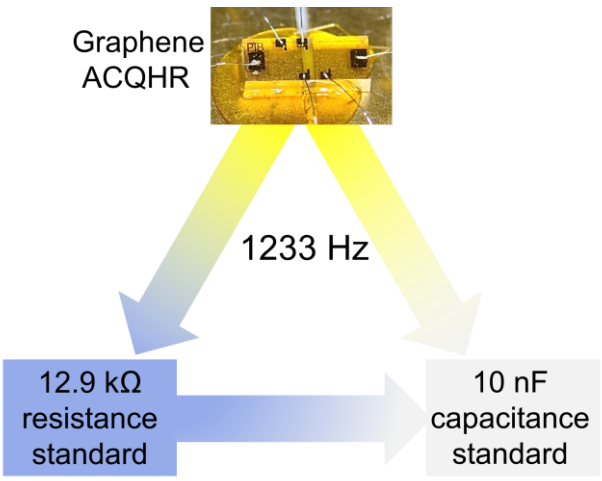

Figure 4. Triangle measurements performed in the technical assessment of the INRIM's and PTB's bridges at 1233 Hz. At the top of the picture there is a photo of the graphene ACQHR device fabricated by PTB.

5. Conclusions

The onsite comparison between the INRIM's and PTB's digital impedance bridges was very fruitful since it allowed us to exchange our knowledge and experiences. Thus, we were able to solve some issues that affected the bridges, for example for INRIM's bridge, mainly, the temperature dependence of the digital source, the non-ideal switches involved in the balance automatization and the current equalization in the circuit. Furthermore, deviations from bad connectors to the ACQHR could be fixed in PTB's Josephson impedance bridge. Finally, the comparison of the bridges resulted in a very good agreement of a few parts in 10^8 with a combined type A uncertainty of the same order.

6. Acknowledgements

The authors thank J. Schurr for calibrating the 10 nF capacitance standards.
This work is supported by the Joint Research Project GIQS (18SIB07). This project received funding from the European Metrology Programme for Innovation and Research (EMPIR) co-financed by the Participating States and from the European Unions' Horizon 2020 research and innovation programme.
Martina Marzano received fundings from the EMPIR Research Mobility Grant 18SIB07-RMG1 related to the Joint Research Project GIQS.

References

[1] J. Schurr, V. Bürkel1 and B. P. Kibble, "Realizing the farad from two ac quantum Hall resistances", *Metrologia*, **46**, 6, October 2009 , doi: 10.1088/0026-1394/46/6/003

[2] Consultative Committee for Electricity and Magnetism, "SI Brochure, 9th ed., Appendix 2: Mise en pratique for the definition of the ampere and other electric units in the SI," 20 May 2019.

[3] EMPIR Joint Research Project 18SIB07 GIQS "Graphene Impedance Quantum Standard" (www.ptb.de/empir2019/giqs/)

[4] R. Ribeiro-Palau, F. Lafont, J. Brun-Picard, D. Kazazis, A. Michon, F. Cheynis, O. Couturaud, C. Consejo, B. Jouault, W. Poirier, and F. Schopfer, "Quantum Hall resistance standard in graphene devices under relaxed experimental conditions," *Nature Nanotech.*, **10**, September 2015, pp. 965–971, doi: 10.1038/nnano.2015.192

[5] M. Marzano, M. Ortolano, V. D'Elia, A. Müller, and L. Callegaro, "A fully digital bridge towards the realization of the farad from the quantum Hall effect," *Metrologia*, **58**, 1, December 2020, p. 015002, doi: 10.1088/1681-7575/abba86

[6] S. Bauer, R. Behr, R. E. Elmquist, M. Goetz, J. Herick, O. F. Kieler, M. Kruskopf, J. Lee, L. Palafox, Y. Pimsut, and J. Schurr, “A four-terminal-pair Josephson impedance bridge combined with a graphene quantized Hall resistance,” *Meas. Sci. Technol.*, **32**, 6, March 2021, p. 065007, doi: 10.1088/1361-6501/abcff3

[7] S. P. Benz and C. A. Hamilton, "A pulse - driven programmable Josephson voltage standard", *Appl. Phys. Lett.*, **68**, 1996, 3171-3173, doi: 10.1063/1.115814

[8] D-H. Chae, M. Kruskopf, J. Kučera, J. Park, Y. Yin, P. Svoboda, P. Chrobok, F. Couëdo, N. T. M. Tran, D. B. Kim, K. Pierz, M. Goetz and F. Schopfer, “Investigation of the stability of graphene devices for quantum resistance metrology at direct and alternating current,” *Meas. Sci. Technol.*, 2022, Accepted, doi: 10.1088/1361-6501/ac4a1a