POLITECNICO DI TORINO
Repository ISTITUZIONALE

Observable measure of quantum coherence in finite dimensional systems

Original
Observable measure of quantum coherence in finite dimensional systems / Girolami, D.. - In: PHYSICAL REVIEW LETTERS. - ISSN 0031-9007. - 113:17(2014), p. 170401. [10.1103/PhysRevLett.113.170401]

Availability:
This version is available at: 11583/2849535 since: 2020-10-22T15:51:26Z

Publisher:
American Physical Society

Published
DOI:10.1103/PhysRevLett.113.170401

Terms of use:

This article is made available under terms and conditions as specified in the corresponding bibliographic description in the repository

Publisher copyright

(Article begins on next page)

25 November 2026

Observable Measure of Quantum Coherence in Finite Dimensional Systems

Davide Girolami*
Clarendon Laboratory, Department of Physics, University of Oxford, Parks Road, Oxford OX1 3PU, United Kingdom
and Department of Electrical and Computer Engineering, National University of Singapore,
4 Engineering Drive 3, Singapore 117583, Singapore
(Received 23 April 2014; published 20 October 2014)

Quantum coherence is the key resource for quantum technology, with applications in quantum optics, information processing, metrology, and cryptography. Yet, there is no universally efficient method for quantifying coherence either in theoretical or in experimental practice. I introduce a framework for measuring quantum coherence in finite dimensional systems. I define a theoretical measure which satisfies the reliability criteria established in the context of quantum resource theories. Then, I present an experimental scheme implementable with current technology which evaluates the quantum coherence of an unknown state of a d-dimensional system by performing two programmable measurements on an ancillary qubit, in place of the $O(d^2)$ direct measurements required by full state reconstruction. The result yields a benchmark for monitoring quantum effects in complex systems, e.g., certifying nonclassicality in quantum protocols and probing the quantum behavior of biological complexes.

DOI: 10.1103/PhysRevLett.113.170401 PACS numbers: 03.65.Aa, 03.65.Ta, 03.65.Yz, 03.67.Mn

Introduction.—While harnessing quantum coherence is a matter of routine in delivering quantum technology [1–5], and the quantum optics rationale rests on creation and manipulation of coherence [6], there is no universally efficient route to measure the amount of quantum coherence carried by the state of a system in dimension $d > 2$. It is customary to employ quantifiers tailored to the scenario of interest, i.e., of not general employability, expressed in terms of *ad hoc* entropic functions, correlators, or functions of the off-diagonal density matrix coefficients (if available) [7–9].

Quantum information theory provides the framework for addressing the problem. Physical laws are interpreted as restrictions on the accessible quantum states and operations, while the properties of physical systems are the resources that one must consume to perform a task under such laws [10]. An algorithmic characterization of quantum coherence as a resource and a set of bona fide criteria for coherence monotones have been identified [7,11,12]. Also, coherence has been shown to be related to the asymmetry of a quantum state [13,14]. On the experimental side, the scalability of the detection scheme is a major criterion in developing witnesses and measures of coherence, as we are interested in exploring the quantum features of highly complex macrosystems, e.g., multipartite quantum registers and networks. Therefore, it is desirable to have a coherence measure which is both theoretically sound and experimentally appealing.

Here, I introduce a measure of quantum coherence for states of finite dimensional systems. The quantity satisfies the properties of reliable coherence quantifiers, and it is easy to compute, not involving any optimization. Also, it has a lower bound which is experimentally observable. The detection of quantum coherence does not require reconstruction of the full density matrix of the state, but it relies upon the estimation of quadratic functionals of the density matrix coefficients. I propose a scheme which is readily implementable with current quantum technology, e.g., in an all-optical setup [6]. Regardless of the dimensionality d of the system, the protocol requires us to realize two programmable measurements [15–20], which are basic operations in quantum information, on an ancillary qubit which undergoes a unitary interaction with the system under scrutiny. An alternative scheme requiring $O(d)$ measurements overcomes the implementation of multipartite controlled gates.

Measure of coherence: theory.—In a quantum measurement, we observe wavelike probability distributions of outcomes. In particular, the uncertainty of a measurement is twofold [21,22]. First, an inherently classical indeterminacy is brought about by the ignorance about the state of the system, being quantified by its mixedness. Second, a quantum uncertainty is due to the fact that the state is changed by the measurement. The quantum coherence of the state embodies the latter contribution to the unpredictability of the outcome. A state ρ is left invariant by measuring an observable K (assumed bounded and nondegenerate) if and only if it does not show coherence in the K eigenbasis, being an eigenstate or a mixture of eigenstates of the observable, i.e., $[\rho, K] = 0$ [23].

A quantitative characterization to the above argument is the following. I define the K coherence of a d-dimensional state ρ as the quantum coherence it carries when measuring K. For a pure state $|\phi\rangle$, the uncertainty on the outcome, which is exclusively due to quantum coherence, can be safely measured by the variance $\mathcal{V}(|\phi\rangle, K)$. Given the spectral decomposition $K = k_i|k_i\rangle\langle k_i|$, we have $\mathcal{V}(|\phi\rangle, K) = \sum_i k_i^2(K_{i\phi} - K_{i\phi}^2) - \sum_{i\neq j} k_i k_j K_{i\phi} K_{j\phi}$, which is

 © 2014 American Physical Society

a non-negative function of the coherence terms $K_{i\phi} = |\langle\phi|k_i\rangle|^2$. For a mixed state $\rho = \sum_i p_i|\phi_i\rangle\langle\phi_i|$, $\sum_i p_i = 1$, the situation is more complex. The variance is now affected by the state mixedness. We can formally split it in a quantum and a classical part: $\mathcal{V}(\rho, K) = \mathcal{V}^Q(\rho, K) + \mathcal{V}^C(\rho, K)$ [21]. Coherence is then related to the truly quantum share $\mathcal{V}^Q(\rho, K)$, obtained filtering out the uncertainty $\mathcal{V}^C(\rho, K)$ due to mixing. Thus, we search for a measure which is non-negative (it is a measure of uncertainty), zero if and only if states and observable commute (faithful), convex (nonincreasing under mixing), and bounding from below the variance, being equal to it for pure states. A class of functions which enjoy all these properties is given by the Wigner-Yanase-Dyson skew information [24]

$$\mathcal{V}^Q(\rho,K)=\mathcal{I}^p(\rho,K)=-1/2\mathrm{Tr}\{[\rho^p,K][\rho^{1-p},K]\},\ 0<p<1. \tag{1}$$

For technical convenience, I fix $p = 1/2$ (from now on, the index is dropped) and prove that

Result 1.—The skew information $\mathcal{I}(\rho, K) = -1/2\mathrm{Tr}\{[\sqrt{\rho}, K]^2\}$ is a measure of the K coherence of the state ρ.

Indeed, the skew information satisfies the bona fide criteria for coherence monotones [7,11,12] (see proof at the end). It was originally introduced to quantify the quantum uncertainty in measurements under conservation laws [24], and later investigated in quantum statistics [21,25–28] and characterization of quantum correlations [23,29]. For mixed states, the skew information can be interpreted as the lower bound of the weighted statistical uncertainty about K for any possible state preparation, i.e., $\mathcal{I}(\rho, K) \leq \sum_i p_i \mathcal{V}(|\phi_i\rangle, K), \forall\{\phi_i\}$. A numerical example is presented in Fig. 1. Consistently, given a n-partite system $A_{1,2,\ldots n}$, the local K_{A_i} coherence is given by $\mathcal{I}(\rho_{A_1,A_2,\ldots,A_n}, \mathbb{I}_{A_i,A_2,\ldots,A_{i-1}} \otimes K_{A_i} \otimes \mathbb{I}_{A_{i+1},A_{i+2},\ldots,A_n})$ [30].

It is noticeable that the skew information yields a common framework for two quantum resources, i.e., coherence and asymmetry. The latter is the ability of a state to act as a reference frame under a superselection rule, being widely investigated in recent years [13,14,31–44]. One observes that asymmetry is the quantum coherence lost by applying a phase shift with respect to the eigenbasis of a "supercharge" Q [14,37]. Then, the quantity $\mathcal{I}(\rho, Q)$ turns out to be a full-fledged measure of asymmetry [45].

Experimental proposals.—In the laboratory, functionals of the state density matrix are estimated by implementing programmable measurements on an ancillary qubit [15–20]. The method has been applied to measure entanglement and general quantum correlations without state reconstruction [46,47]. Here, I employ it to evaluate the quantum coherence of a state whose density matrix is unknown.

The square root terms prevent us from recasting the skew information as a function of observables. Nevertheless,

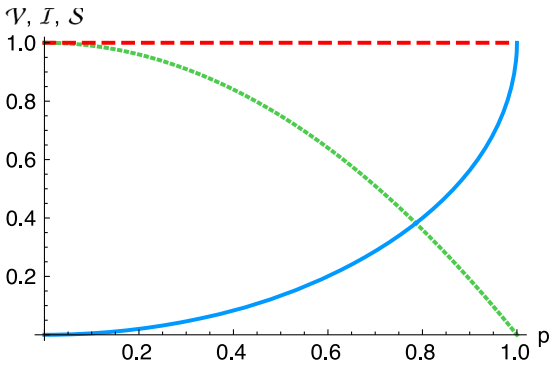

FIG. 1 (color online). Coherence as quantum uncertainty. A measurement implies two kinds of uncertainty. A classical one, which is quantified by the state mixedness and is independent of the measured observable; a quantum contribution to the uncertainty, which is observable dependent and reflects the quantum coherence of the state. The plot shows the uncertainty on the measurement of the observable $\sigma_z = \left(\begin{smallmatrix}1 & 0\\ 0 & -1\end{smallmatrix}\right)$ in the qubit $\rho = (1-p)\mathbb{I}_2/2 + p|\psi\rangle\langle\psi|, |\psi\rangle = (1/\sqrt{2})(|0\rangle + |1\rangle), \quad p \in [0,1]$. The red dashed line is the variance of the σ_z operator: $\mathcal{V}(\rho, \sigma_z) = \langle\sigma_z{}^2\rangle_\rho - \langle\sigma_z\rangle_\rho^2$. The blue continuous curve represents the quantum coherence $\mathcal{I}(\rho, \sigma_z)$. The green dotted curve depicts the linear entropy $\mathcal{S}(\rho) = 2 - 2\mathrm{Tr}[\rho^2]$, which measures the classical uncertainty. As expected by a coherence measure, the skew information monotonically increases with p.

it is possible to set a nontrivial lower bound. One has $1/2\mathrm{Tr}\{[\rho, K]^2\} \geq \mathrm{Tr}\{[\sqrt{\rho}, K]^2\}, \forall\rho, K$, and therefore,

$$\mathcal{I}(\rho,K) \geq \mathcal{I}^L(\rho,K) \geq 0,$$
$$\mathcal{I}^L(\rho,K) = -1/4\mathrm{Tr}\{[\rho,K]^2\}. \tag{2}$$

Given the spectral decomposition $\rho = \sum_i \lambda_i|\psi_i\rangle\langle\psi_i|$, the two quantities read $\mathcal{I}(\rho,K) = 1/2\sum_{ij}(\sqrt{\lambda_i} - \sqrt{\lambda_j})^2 \times K_{ij}^2, \mathcal{I}^L(\rho,K) = 1/4\sum_{ij}(\lambda_i - \lambda_j)^2 K_{ij}^2, K_{ij} = |\langle\psi_i|K|\psi_j\rangle|$. The inequality is satisfied if $(\sqrt{\lambda_i} - \sqrt{\lambda_j})^2 \geq 1/2(\lambda_i - \lambda_j)^2$, $\forall i, j$. Simplifying, one obtains $\sqrt{\lambda_i} + \sqrt{\lambda_j} \leq \sqrt{2}$, which is always true. Also, $\mathcal{I}^L(\rho,K) = 0 \Leftrightarrow \mathcal{I}(\rho,K) = 0$. Note that for pure states $\mathcal{V}(\rho,K) = \mathcal{I}(\rho,K) = 2\mathcal{I}^L(\rho,K)$, while for two-dimensional systems (qubits) the inequality $2\mathcal{I}^L(\rho,K) \geq \mathcal{I}(\rho,K)$ holds.

The lower bound is experimentally measurable. By defining the unitary transformation $U_K(t) = e^{iKt}$ and calculating the Taylor expansion about $t = 0$, one has $\mathrm{Tr}[\rho U_K(t)\rho U_K^\dagger(t)] = \mathrm{Tr}[\rho^2] - (\mathrm{Tr}[\rho^2 K^2] - \mathrm{Tr}[\rho K\rho K])t^2 + O(t^3)$, and then $\mathcal{I}^L(\rho,K) = \frac{1}{2t^2}\{\mathrm{Tr}[\rho^2] - \mathrm{Tr}[\rho U_K(t)\rho U_K^\dagger(t)]\} + O(t)$. The two terms admit an expression in terms of observables. The purity equals the mean value of the SWAP operator $V_{AB} = \sum_{ij}|i_A j_B\rangle\langle j_A i_B|$ applied to two state copies $\rho_{1,2} \equiv \rho$: $\mathrm{Tr}[\rho^2] = \mathrm{Tr}[V_{12}(\rho_1 \otimes \rho_2)]$ [16–20]. On the same hand, the overlap is given by $\mathrm{Tr}[\rho U_K \rho U_K^\dagger] = \mathrm{Tr}[V_{12}(\rho_1 \otimes U_{K,2}\rho_2 U_{K,2}^\dagger)]$.The mean value

of the SWAP is estimated by implementing the interferometers in Fig. 2, where an ancillary qubit prepared in the arbitrary states $\alpha_{\rm in}^{P,O}$ acts as the control state. Adding a controlled-SWAP gate, the polarization of ancilla at the output gives the mean value of the SWAP: $\langle\sigma_z\rangle_{\alpha_{\rm out}^P} = {\rm Tr}[\alpha_{\rm in}^P\sigma_z]{\rm Tr}[V_{12}(\rho_1\otimes\rho_2)]$, $\langle\sigma_z\rangle_{\alpha_{\rm out}^O} = {\rm Tr}[\alpha_{\rm in}^O\sigma_z]{\rm Tr}[V_{12}(\rho_1\otimes U_{2,K}\rho_2 U_{2,K}{}^\dagger)]$. Hence,

Result 2.—The experimental evaluation of (a lower bound of the) quantum coherence of an unknown state in a d-dimensional system requires two programmable measurements on an ancillary qubit.

Quantum coherence is measurable by means of two measurements only, while tomographic state reconstruction would require $O(d^2)$ direct measurements on the system. For quantum gates acting on qubits, i.e., the building blocks of quantum algorithms, any observable is defined by $K = \vec{n}\cdot\vec{\sigma}$, $|\vec{n}| = 1$, being $\vec{\sigma} = \{\sigma_i\}$ the Pauli matrices. Thus, one obtains the simplified expression $\mathcal{I}^L(\rho, K) = \frac{1}{2}\{{\rm Tr}[\rho^2] - {\rm Tr}[\rho U_K(\theta)|_{\theta=\pi/2}\rho U_K^\dagger(\theta)|_{\theta=\pi/2}]\}$.

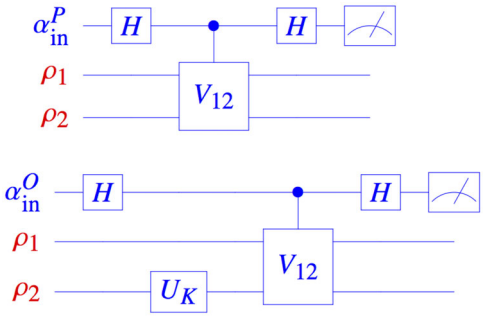

FIG. 2 (color online). Detection of quantum coherence. The experiment consists in performing two programmable measurements on an ancillary qubit in an interferometric configuration. The density matrix of the state is not directly accessible (depicted in red), while the other elements (blue) are built at our convenience. Top: The network evaluates the state purity ${\rm Tr}[\rho^2]$. An ancillary control qubit in the initial state $\alpha_{\rm in}^P$ undergoes the application of a Hadamard gate $H = (1/\sqrt{2})\left(\begin{smallmatrix}1 & 1\\ 1 & -1\end{smallmatrix}\right)$, followed by an interacting controlled-V_{12} gate applied to the ancilla and the state copies: $C_{V_{12}} = \left(\begin{smallmatrix}\mathbb{I}_{d^2} & 0_{d^2}\\ 0_{d^2} & V_{12}\end{smallmatrix}\right)$, $V_{12} = (1/d)(\mathbb{I}_{d^2} + (1/(d-1))\times\sum_i \tau_i\otimes\tau_i)$, where $\{\tau_i\}$ are the normalized d-dimensional Gell-Mann matrices $\{\tilde{\sigma}_i\}$: $\tau_i = \sqrt{(d(d-1)/2)}\tilde{\sigma}_i$. The SWAP can be recast in terms of projectors $P_{12}^{\pm} = \frac{1}{2}(\mathbb{I}_{d^2} \pm V_{12}) = ((d\pm 1)/2d)\mathbb{I}_{d^2} \pm [1/(2(d-1))]\sum_i \tau_i\otimes\tau_i$ on the (anti-)symmetric subspaces, which are employable observables in optical setups. Note, also, that any d gate is decomposable in a sequence of one-qubit and two-qubit controlled-NOT transformations [48]. A second Hadamard gate is finally applied to the ancilla. The mean value of the ancilla polarization, which corresponds to the visibility of the interferometer, is given by $\langle\sigma_z\rangle_{\alpha_{\rm out}^P} = {\rm Tr}[\alpha_{\rm in}^P\sigma_z]{\rm Tr}[V_{12}\rho_1\otimes\rho_2] = {\rm Tr}[\alpha_{\rm in}^P\sigma_z]{\rm Tr}[\rho^2]$. Bottom: The very same scheme is applied, but a copy of the state is rotated by the unitary gate U_K before the interaction is switched on. The ancilla polarization is then $\langle\sigma_z\rangle_{\alpha_{\rm out}^O} = {\rm Tr}[\alpha_{\rm in}^O\sigma_z]\times{\rm Tr}[V_{12}(\rho_1\otimes U_{2,K}\rho_2 U_{2,K}^\dagger)] = {\rm Tr}[\alpha_{\rm in}^O\sigma_z]{\rm Tr}[\rho_1 U_{2,K}\rho_2 U_{2,K}^\dagger]$.

The controlled gate may be cumbersome to implement. It is, then, useful to work out an alternative scheme. It is known that the purity can be evaluated by applying twice the "$\sqrt{\rm SWAP}$" operator $\sqrt{V_{AB}} = (1/\sqrt{2})(\mathbb{I}_{d^2} - iV_{AB})$ in parallel to the ancilla and each copy of the state [49]. I generalize such a protocol to measure the overlap of two arbitrary states and to build an alternative detection scheme of quantum coherence (Fig. 3, proof at the end of the main text). The outcomes of projective measurements over a basis $\{|i\rangle\langle i|\}$, $i = 1, \ldots, d$, made on the output state of the ancilla in each of the three interferometric configurations in Fig. 3, with additional measurements on the state and the rotated state, ${\rm Tr}[X|i\rangle\langle i|]$, $X = \beta_{\rm out}^{P,O_1,O_2}, \rho, U_K\rho U_K^\dagger$, $i = 1, 2, \ldots, d$, determine both the purity and overlap terms. In conclusion:

Result 2/bis.—The experimental detection of (a lower bound of the) quantum coherence of an unknown state in a d-dimensional system requires $O(d)$ projective measurements on an ancillary qudit and the system itself.

The strategy still enjoys a polynomial advantage against state tomography.

Discussion.—I introduced a model-independent quantitative characterization of quantum coherence for states

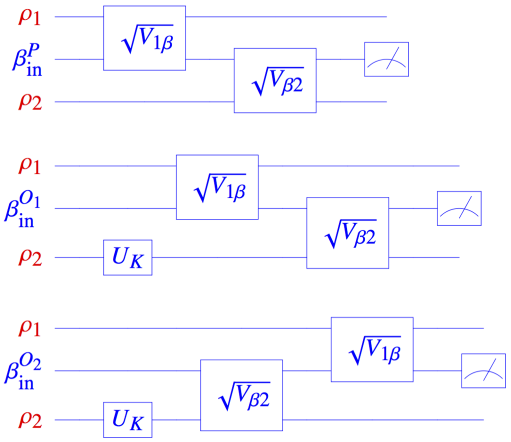

FIG. 3 (color online). Alternative scheme for the detection of quantum coherence (full details in the proof). Here d projective measurements are performed on an ancillary qudit. The state is not directly accessible (depicted in red), while the network elements (blue) are built at our convenience. Top: The network evaluates the state purity ${\rm Tr}[\rho^2]$. A $\sqrt{V_{1\beta}}$ gate is applied to an ancilla $\beta_{\rm in}^P$ and a copy of the state ρ_1, followed by a second $\sqrt{V_{\beta 2}}$ gate applied to the ancilla and the second state copy. Projective measurements on an arbitrary basis $|i\rangle\langle i|, i = 1, \ldots, d$ in the output state of the ancilla $\beta_{\rm out}^P$, and on the input state (not depicted), estimate the mean value of the purity ${\rm Tr}[\rho^2]$. Center and Bottom: The same scheme is employed, but a copy of the state is rotated by the unitary gate U_K before the interaction with the ancilla. The scheme is repeated by switching the two target states. Projective measurements at the output state of the ancilla $\beta_{\rm out}^{O_1,O_2}$, on the initial state, and on the rotated state (not depicted), determine the mean value of the overlap ${\rm Tr}[\rho U_K\rho U_K^\dagger]$.

of finite dimensional systems. At the theoretical level, the skew information quantifies coherence as the genuinely quantum uncertainty of a measurement. The significance of the proposed experimental schemes rests on their scalability and generality, outperforming protocols based on state reconstruction. The result also suggests a new approach, based on information geometry [50], for studying open quantum systems. I proved, here, that the skew information is the geometric entity which describes coherence. This quantity belongs to the family of Riemannian metrics on the statistical manifold of quantum states which are monotonically decreasing under quantum channels [51]. Then, the evolution of such a metric (and related higher order tensors) may help monitor quantum backflow of information in non-Markovian dynamics and the supraclassical efficiency of energy transport mechanisms in biological complexes [5,52,53], shaping our knowledge of quantum memory effects in open systems.

Proof of Result 1.—(i) The skew information is a faithful measure of coherence. It is convex, non-negative [24], and vanishes if and only if the state is incoherent. The latter is defined as a state whose density matrix is diagonal in a given basis. By definition, $\mathcal{I}(\rho,K)=0\Leftrightarrow[\rho,K]=0$, i.e., state and observable diagonalize in the same eigenbasis, Q.E.D. (ii) It is monotonically nonincreasing under incoherent operations, which are expressed by a set of Kraus operators $\{K_n\}$ such that $\sum_n K_n^\dagger K_n=\mathbb{I}, K_n^\dagger \mathcal{I}_K K_n\subset\mathcal{I}_K, \forall n$, where $\mathcal{I}_K$ is the set of incoherent states with respect to $\{|k_i\rangle\}$. Indeed, the skew information $\mathcal{I}(\rho,K)$ does not increase on average by a von Neumann measurement of K: $\sum_n p_n\mathcal{I}(K_n\rho K_n^\dagger,K)\le\mathcal{I}(\rho,K)$ [54]. The result and the convexity of the skew information proves the monotonicity for completely positive trace preserving (CPTP) incoherent maps, and that, for any incoherent state $\rho_{\mathcal{I}_K}$, one has $\mathcal{I}(K_n^\dagger\rho_{\mathcal{I}_K}K_n,K)=0,\forall n$. I provide an alternative constructive argument for the class of K-invariant operations, which is a subset of the CPTP ones [7]. The skew information of a bipartite state ρ_{AB} satisfies $\mathcal{I}(\rho_{AB},K_A\otimes\mathbb{I}_B)\ge\mathcal{I}(\mathrm{Tr}_B[\rho_{AB}],K_A),\forall K$. A K-invariant channel on a system A takes the form $\mathcal{E}_A^K(\rho_A)=\mathrm{Tr}_B[V_{AB}^K(\rho_A\otimes\tau_B)V_{AB}^{K\dagger}]$, where V_{AB}^K is a K-invariant unitary, i.e., $V_{AB}^K(K_A\otimes\mathbb{I}_B+\mathbb{I}_A\otimes K_B)V_{AB}^{K\dagger}=K_A\otimes\mathbb{I}_B+\mathbb{I}_A\otimes K_B$, and $\tau_B\in\mathcal{I}_K$. One then obtains $\mathcal{I}(\rho_A,K_A)=\mathcal{I}(\rho_A\otimes\tau_B,K_A\otimes\mathbb{I}_B+\mathbb{I}_A\otimes K_B)=\mathcal{I}[\rho_A\otimes\tau_B,V_{AB}^K(K_A\otimes\mathbb{I}_B+\mathbb{I}_A\otimes K_B)V_{AB}^{K\dagger}]=\mathcal{I}[V_{AB}^{K\dagger}(\rho_A\otimes\tau_B)V_{AB}^K,K_A\otimes\mathbb{I}_B+\mathbb{I}_A\otimes K_B]\ge\mathcal{I}\{\mathrm{Tr}_B[V_{AB}^{K\dagger}(\rho_A\otimes\tau_B)V_{AB}^K],K_A\}=\mathcal{I}[\mathcal{E}_A^{K_A}(\rho_A),K_A]$, Q.E.D. (iii) One may, further, demand monotonicity under classical encoding: $\mathcal{I}(\sum_n p_n K_{n,A}^\dagger\rho_A K_{n,A}\otimes|n\rangle\langle n|_B,K_A\otimes\mathbb{I}_B)\le\mathcal{I}(\rho_A,K_A),|n\rangle\langle n|\in\mathcal{I}_K$ (criterion C2c of [7]). The property is satisfied, since $\mathcal{I}(\sum_n p_n K_{n,A}^\dagger\rho_A K_{n,A}\otimes|n\rangle\langle n|_B,K_A\otimes\mathbb{I}_B)\le\sum_n p_n\mathcal{I}(K_{n,A}^\dagger\rho_A K_{n,A},K_A)\le\mathcal{I}(\rho_A,K_A)$, Q.E.D.

Proof of Result 2/bis.—Here, I prove that the schemes in Fig. 3 evaluate the overlap of two arbitrary density matrices $\rho_{A,B}$, generalizing Ref. [49]. Result 2/bis is then a case study with $\rho_{A,B}=\rho$ (Top scheme), $\rho_A=\rho,\rho_B=U_K\rho U_K^\dagger$ (Center) and $\rho_A=U_K\rho U_K^\dagger,\rho_B=\rho$ (Bottom). The steps of the protocol are (i) Preparation of the input states: a d-dimensional ancilla (in a pure state, for simplicity) and two d-dimensional states whose density matrices are, respectively, $\beta=(1/d)(\mathbb{I}_d+\vec{x}_\beta\cdot\vec{\tau}),|\vec{x}_\beta|=1$, $\rho_A=(1/d)(\mathbb{I}_d+\vec{x}_A\cdot\vec{\tau}),\rho_B=(1/d)(\mathbb{I}_d+\vec{x}_B\cdot\vec{\tau})$. The goal is to determine $\mathrm{Tr}[\rho_A\rho_B]=(1/d)(1+(d-1)\vec{x}_A\cdot\vec{x}_B)$. (ii) Application of the gate $\sqrt{V_{A\beta}}=(1/\sqrt{2})(\mathbb{I}_{d^2}-iV_{A\beta})$ to the state ρ_A and the ancilla β. The resulting marginal state of the ancilla at this intermediate stage is given by $\beta_{\mathrm{int}}=(1/d)(\mathbb{I}_d+\vec{y}_\beta\cdot\vec{\tau})$, where $\vec{y}_\beta=\frac{1}{2}(\vec{x}_A+\vec{x}_\beta+(d-1)\vec{x}_A\wedge\vec{x}_\beta)$ and $\wedge$ is the exterior product. (iii) Implementation of the second $\sqrt{V_{\beta B}}$ gate to the ancilla and the state ρ_B. The output state of the ancilla reads $\beta_{\mathrm{out}}=(1/d)(\mathbb{I}_d+\vec{z}_\beta\cdot\vec{\tau})$, with $\vec{z}_\beta=\frac{1}{2}(\vec{x}_B+\vec{y}_\beta+(d-1)\vec{y}_\beta\wedge\vec{x}_B)$. (iv) Performing a complete set of d projective measurements over a basis $\{|i\rangle\langle i|=\rho_i, i=1,2,\ldots d$ on the output state of the ancilla. A clever choice is such that the pure state $\beta=|i_\beta\rangle\langle i_\beta|$ is an element of the basis: $\mathrm{Tr}[\beta|i\rangle\langle i|]=\delta_{ii_\beta}$. The outcome of each measurement is $S_{AB}^i=\mathrm{Tr}[\beta_{\mathrm{out}}\vec{x}_i\cdot\vec{\tau}]=(d-1)\vec{z}_\beta\cdot\vec{x}_i=\frac{d-1}{2}(\vec{x}_B\cdot\vec{x}_i+\frac{\vec{x}_A\cdot\vec{x}_i+\vec{x}_\beta\cdot\vec{x}_i}{2})+\frac{(d-1)^2}{4}(\vec{x}_A\wedge\vec{x}_\beta\cdot\vec{x}_i+\vec{x}_A\wedge\vec{x}_B\cdot\vec{x}_i+\vec{x}_\beta\wedge\vec{x}_B\cdot\vec{x}_i)+\frac{(d-1)^3}{4}[(\vec{x}_A\wedge\vec{x}_\beta)\wedge\vec{x}_B\cdot\vec{x}_i]$. (v) Repetition of the protocol by interchanging ρ_A,ρ_B, obtaining the term S_{BA}^i. One then has $S_{AB}^i+S_{BA}^i=((d-1)/4)[3(\vec{x}_A\cdot\vec{x}_i+\vec{x}_B\cdot\vec{x}_i)+2\delta_{ii_\beta}]+[((d-1)^3)/4][(\vec{x}_A\wedge\vec{x}_\beta)\wedge\vec{x}_B\cdot\vec{x}_i+(\vec{x}_B\wedge\vec{x}_\beta)\wedge\vec{x}_A\cdot\vec{x}_i]$. After some algebra (see Appendix of [49] for the case $A=B$), one obtains $(\vec{x}_A\wedge\vec{x}_\beta)\wedge\vec{x}_B\cdot\vec{x}_i+(\vec{x}_B\wedge\vec{x}_\beta)\wedge\vec{x}_A\cdot\vec{x}_i=[1/((d-1)^2)][2(\vec{x}_A\cdot\vec{x}_B)\delta_{ii_\beta}-(\vec{x}_A\cdot\vec{x}_i)\times(\vec{x}_B\cdot\vec{x}_{i_\beta})-(\vec{x}_B\cdot\vec{x}_i)(\vec{x}_A\cdot\vec{x}_{i_\beta})]$. (vi) Additional d projective measurements on $\rho_{A,B}$ have outcomes $S_{A,B,\beta}^i=(d-1)\vec{x}_{A,B,\beta}\cdot\vec{x}_i$. The overlap is then determined by:

$$\vec{x}_A\cdot\vec{x}_B=\sum_{i=1}^{d}\left(2(S_{AB}^i+S_{BA}^i)-3/2(S_A^i+S_B^i)+\frac{1}{2(d-1)}(S_A^iS_B^{i_\beta}+S_B^iS_A^{i_\beta})\right)-1. \tag{3}$$

The method requires $5d$ measurements (to obtain S_{AB},S_{BA},S_A,S_B, for the overlap, and S_{AA} for the purity). Allowing for interacting gates between $\rho_{A,B}$, the task requires $4d$ measurements. In such a case, the protocol has to be run setting $\beta=\rho_B=\rho,\rho_A=U_K\rho U_K{}^\dagger$, then switching to $\beta=\rho_B=U_K\rho U_K{}^\dagger,\rho_A=\rho$, and, finally, making d projective measurements on $\rho_{A,B}$.

This work was supported by the Singapore National Research Foundation under NRF Grant No. NRF-NRFF2011-07 and the UK Engineering and Physical Sciences Research Council under the EPSRC Grant No. EP/L01405X/1. I thank B. Aaronson, G. Adesso, M. Ahmadi, D. Brody, A. Chaudry, T. Farrow, P. Gibilisco, F. Hansen, I. Mekhov, R. Nair, M. Tsang, T. Tufarelli, and V. Vedral for fruitful discussions.

*davegirolami@gmail.com

[1] M. A. Nielsen and I. L. Chuang, *Quantum Computation and Quantum Information* (Cambridge University Press, Cambridge, England, 2000).
[2] V. Giovannetti, S. Lloyd, and L. Maccone, Nat. Photonics **5**, 222 (2011).
[3] A. K. Ekert, Phys. Rev. Lett. **67**, 661 (1991).
[4] Nature Physics Insight—Quantum Simulators, Nat. Phys. **8**, 249 (2012).
[5] N. Lambert, Y.-N. Chen, Y.-C. Cheng, C.-M. Li, G.-Y. Chen, and F. Nori, Nat. Phys. **9**, 10 (2013).
[6] D. F. Walls and G. J. Millburn, *Quantum Optics* (Springer, New York, 2010).
[7] T. Baumgratz, M. Cramer, and M. B. Plenio, Phys. Rev. Lett. **113**, 140401 (2014).
[8] A. Monras, A. Checinska, and A. K. Ekert, New J. Phys. **16**, 063041 (2014).
[9] C.-M. Li, N. Lambert, Y.-N. Chen, G.-Y. Chen, and F. Nori, Sci. Rep. **2**, 885 (2012).
[10] M. Horodecki and J. Oppenheim, Int. J. Mod. Phys. B **27**, 1345019 (2013).
[11] J. Aberg, arXiv:quant-ph/0612146.
[12] S. Luo, Theor. Math. Phys. **143**, 681 (2005).
[13] S. D. Bartlett, T. Rudolph, and R. W. Spekkens, Rev. Mod. Phys. **79**, 555 (2007).
[14] I. Marvian and R. W. Spekkens, arXiv:1312.0680.
[15] M. A. Nielsen and I. L. Chuang, Phys. Rev. Lett. **79**, 321 (1997).
[16] J. P. Paz and A. Roncaglia, Phys. Rev. A **68**, 052316 (2003).
[17] T. A. Brun, Quantum Inf. Comput. **4**, 401 (2004).
[18] G. M. D'Ariano and P. Perinotti, Phys. Rev. Lett. **94**, 090401 (2005).
[19] A. K. Ekert, C. M. Alves, D. K. L. Oi, M. Horodecki, P. Horodecki, and L. C. Kwek, Phys. Rev. Lett. **88**, 217901 (2002).
[20] R. Filip, Phys. Rev. A **65**, 062320 (2002).
[21] S. Luo, Phys. Rev. Lett. **91**, 180403 (2003).
[22] K. Korzekwa, M. Lostaglio, D. Jennings, and T. Rudolph, Phys. Rev. A **89**, 042122 (2014).
[23] D. Girolami, T. Tufarelli, and G. Adesso, Phys. Rev. Lett. **110**, 240402 (2013).
[24] E. P. Wigner and M. M. Yanase, Proc. Natl. Acad. Sci. U.S.A. **49**, 910 (1963).
[25] P. Gibilisco and T. A. Isola, J. Math. Phys. (N.Y.) **44**, 3752 (2003).
[26] F. Hansen, Proc. Natl. Acad. Sci. U.S.A. **105**, 9909 (2008).
[27] S. Luo and Q. Zhang, J. Stat. Phys. **114**, 1557 (2004).
[28] D. Brody, J. Phys. A **44**, 252002 (2011).
[29] S. Luo, S. Fu, and C. H. Oh, Phys. Rev. A **85**, 032117 (2012).
[30] See Supplemental Material at http://link.aps.org/supplemental/10.1103/PhysRevLett.113.170401, for a brief comment on the interplay between coherence and correlations as measured by the skew information.
[31] A. Peres and P. F. Scudo, Phys. Rev. Lett. **87**, 167901 (2001).
[32] A. Acin, E. Jane, and G. Vidal, Phys. Rev. A **64**, 050302(R) (2001).
[33] S. D. Bartlett and H. M. Wiseman, Phys. Rev. Lett. **91**, 097903 (2003).
[34] H. M. Wiseman, in *Proceedings of SPIE-The International Society for Optical Engineering* (SPIE, Bellingham, WA, 2003), Vol. 5111, p. 78.
[35] A. Kitaev, D. Mayers, and J. Preskill, Phys. Rev. A **69**, 052326 (2004).
[36] J. A. Vaccaro, F. Anselmi, H. M. Wiseman, and K. Jacobs, Phys. Rev. A **77**, 032114 (2008).
[37] G. Gour, I. Marvian, and R. W. Spekkens, Phys. Rev. A **80**, 012307 (2009).
[38] B. Toloui, G. Gour, and B. C. Sanders, Phys. Rev. A **84**, 022322 (2011).
[39] M. Skotiniotis and G. Gour, New J. Phys. **14**, 073022 (2012).
[40] J. A. Vaccaro, Proc. R. Soc. A **468**, 1065 (2012).
[41] M. Skotiniotis, B. Toloui, I. T. Durham, and B. C. Sanders, Phys. Rev. Lett. **111**, 020504 (2013).
[42] P. Shadbolt, P. T. Vertesi, Y.-C. Liang, C. Branciard, and N. Brunner, Sci. Rep. **2**, 470 (2012).
[43] V. D'Ambrosio, E. Nagali, S. P. Walborn, L. Aolita, S. Slussarenko, L. Marrucci, and F. Sciarrino, Nat. Commun. **3**, 961 (2012).
[44] M. Ahmadi, D. Jennings, and T. Rudolph, New J. Phys. **15**, 013057 (2013).
[45] The proof, which is almost equivalent to the one of Result 1, is reported in the Supplemental Material at [30].
[46] S. P. Walborn, P. H. Souto Ribeiro, L. Davidovich, F. Mintert, and A. Buchleitner, Nature (London) **440**, 1022 (2006).
[47] I. Silva, D. Girolami, R. Auccaise, R. Sarthour, I. Oliveira, T. Bonagamba, E. deAzevedo, D. Soares-Pinto, and G. Adesso, Phys. Rev. Lett. **110**, 140501 (2013).
[48] D. P. DiVincenzo, Phys. Rev. A **51**, 1015 (1995).
[49] H. Nakazato, T. Tanaka, K. Yuasa, G. Florio, and S. Pascazio, Phys. Rev. A **85**, 042316 (2012).
[50] S. Amari and H. Nagaoka, *Methods of Information Geometry* (Oxford University Press, New York, 2007).
[51] D. Petz and C. Sudar, J. Math. Phys. (N.Y.) **37**, 2662 (1996).
[52] A. Rivas, S. F. Huelga, and M. B. Plenio, Rep. Prog. Phys. **77**, 094001 (2014).
[53] X.-M. Lu, X. Wang, and C. P. Sun, Phys. Rev. A **82**, 042103 (2010).
[54] A. Frenkel, E. P. Wigner, and M. M. Yanase, *Philosophical Reflections and Syntheses* (Springer, New York, 1995), p. 195.