POLITECNICO DI TORINO
Repository ISTITUZIONALE

Integrated BIM-based Framework for Actual and Post-earthquake Structural Assessment of Existing Buildings

Original
Integrated BIM-based Framework for Actual and Post-earthquake Structural Assessment of Existing Buildings / Cimellaro, G.P., Domaneschi, M., Villa, V., ZAMANI NOORI, A., Pietropinto, M.V., Cardoni, A., Marasco, S.. - ELETTRONICO. - (2019), pp. 1-7. (ANIDIS 2019 - L'Ingegneria Sismica in Italia Ascoli Piceno 15-19 Settembre 2019).

Availability:
This version is available at: 11583/2818640 since: 2020-05-01T16:51:07Z

Publisher:
ANIDIS - L'Ingegneria Sismica in Italia

Published
DOI:

Terms of use:

This article is made available under terms and conditions as specified in the corresponding bibliographic description in the repository

Publisher copyright

(Article begins on next page)

27 November 2026

ASSOCIAZIONE NAZIONALE ITALIANA DI INGEGNERIA SISMICA
ANIDIS
Italian National Association of Earthquake Engineering

XVIII CONVEGNO ANIDIS
L'ingegneria sismica in Italia
ASCOLI PICENO 2019
15-19 Settembre



Integrated BIM-based Framework for Actual and Post-earthquake Structural Assessment of Existing Buildings

Gian Paolo Cimellaro[a], Marco Domaneschi[a], Valentina Villa[a], Ali Zamani Noori[a], Maria Vittoria Pietropinto[a], Alessandro Cardoni[a], Sebastiano Marasco[a]
[a]*Department of Structural, Geotechnical and Building Engineering, Politecnico di Torino, Italy*

Keywords:BIM model; schools building; seismic vulnerability; non-destructive test

ABSTRACT
The Italian school buildings asset consists of over 40,000 units. The most (about 60%) were built before the introduction of the national standard on school buildings and constructions in seismic areas. The opportunity to define a methodology to assess the condition of an infrastructure before and after a seismic event is therefore of particular importance, both for a screening of the existing assets and for the damage assessment after the event. Before the event, it may allow to establish priorities of intervention in the field of seismic risk reduction. Furthermore, after the event, it can be crucial to recover the infrastructure. The proposed BIM-based (Building Information Modelling)approach includes static and dynamic non-destructive testing and structural finite element analysis of the existing building. Guidelines for BIM modeling will be drawn up in order to give indications to BIM modelers and to obtain a BIM model that can be straightforward used for dynamic structural analyses. It may allow to assess the seismic fragility of the existing infrastructures in terms of the standard vulnerability coefficient. Furthermore, subsequently to the seismic event, it may be useful to identifying incipient damage conditions that are not directly detectable, e.g. by Operational Modal Analysis (OMA) techniques. An existing building school in North Italy is analyzed as a case study to test the proposed framework.

1 INTRODUCTION

Started from '70 with Eastman (Eastman et al., 2011), nowadays BIM is a methodology that is changing dramatically the AEC sector, thank to innovation in nformation Technology (IT). The potential of Building Information Modeling for seismic risk analysis is closely linked to BIM as a relational data-base of buildings information. There are many and many advantages using BIM in project and construction process: can support planning and cost estimation, management of design changes, visualization and simulation of design ideas, construction management, and building lifecycle control. Many recent researchers analyzed also BIM for Facility Management (FM) and for existing buildings (Volk et al., 2014, Becerik-Gerber et al., 2011), and some of them are focused on the use of sensors for monitoring and control of parameters for building uses (Dong et al., 2014). BIM represent the future of building management because is a database which contains all the information about structural and non-structural components vulnerability (Fema, 2006). Some research has also started to define some ways in which Building Information Modeling (BIM) could assist in the assessment and mitigation of seismic risk. (Welch et al., 2014).

Most of the existing schools were built without static verification and with a level of seismic safety not in line with current standards. Nowadays, the seismic safety is established by defining the seismic vulnerability in the technical standards for constructions issued by the Ministry of Infrastructure with Ministerial Decree of 17 January 2018 (NTC–Technical Standards for Construction's structures). Summarizing, it was detected that only 48.5% of school buildings have a static certification, 56% has a static certificate of suitability and only 10.1% are built according

to earthquake safety criteria. Concluding this brief overview, 50.13% of school buildings on the Italian territory are located in earthquake affected areas with a medium-high hazard level (Shiau et al., 2018).

2 OBJECTIVES AND METHODOLOGY

Nowadays BIM is a methodology that is been implementing into construction process with the aim of managing the entire LCA (Life Cycle Assessment) of the building. BIM models are made for new buildings at the design stage and are not always structured to support the execution and subsequent operational and maintenance (O&M) phases. The models for existing buildings, on the other hand, often concentrate on the precise reconstruction of very complex geometries, such as in many cases Heritage-BIM (HBIM), or on systematizing the documentation and data relating to the building materials.

In the case of existing infrastructures such as schools, many studies are focused on the BIM modeling for the energy assessment and for the design of upgrading interventions (Di Giuda et al., 2018). The data contained in the models are therefore linked to the architectonic, plant engineering and energy fields (Moretti et al., 2017). The BIM model hardly contains structural information that can be used and processed with FE (finite element) analysis software.

Before carrying out any intervention on existing buildings the priority is to verify the structural stability and seismic vulnerability to avoid investments on dangerous or inefficient constructions. This is even more strategic when it comes to public buildings as schools. In recent years, there has been a need to assess the seismic vulnerability of the Italian school heritage, built largely without specific seismic safety regulations, with codes that have been exceeded for decades and with insufficient maintenance activities. For this reason, this research aims to define guidelines for structural BIM modelling of existing buildings, by means of which existing or new BIM models can be integrated with details, information and structural characteristics that allow to easily (e.g., through plugins) derive a structural model (e.g., finite element) by which the seismic vulnerability can be calculated.

In order to identify the essential information for the seismic vulnerability analysis, the levels of graphic detail (LOG) and information detail (LOI) defined by the literature and the regulations are evaluated (Di Giuda et al., 2016). The data are collected from the early stages of design and, with the evolution and definition of the design details, they are improved and their degree of reliability is improved. At the construction phase, all the information relating to materials, laying methods and on-site tests become final and useful for the serviceability stage and the building maintenance. Among all these data there are some of strategic importance for the calculation of the seismic vulnerability index.

With the traditional collection and archiving system, not always during the life of the building, the Client properly stores all the documents and data of the project and its realization (technical sheets, drawings, certificates, etc.). In the case of particularly old public buildings, it is quite frequent not to find structural and testing projects. For this reason, it is essential to understand what information is necessary for the construction of FE models. If necessary, these can be collected after by means of non-destructive and reconstructive tests (sclerometric, pacometric tests, etc.).

Once the BIM model has been implemented, it is easy to transfer the BIM to a FE software. The structural model is then validated through on field dynamic vibration tests. In particular operational modal analysis allows to identify the natural frequency and mode shapes. The vulnerability index can be finally assessed following the current prescription from Italian standard. In this way, the proposed methodology may allow the decision-makers to face a complex scenario with a tool that can streamline the procedure by identifying the most dangerous situations, those ones where further investigation is needed or where no intervention is necessary.

3 GUIDELINES

Nowadays BIM is a methodology that is been implementing into construction process with the aim of managing. Guidelines for BIM modelling have been drawn up in order to give indications to BIM modelers and to obtain a BIM model that can be used for dynamic structural analyses. CSIxREVIT is the available plug-in to extrapolate from the Revit BIM model the SAP or ETABS Codes.

The main shortcomings observed when analyzing existing BIM are the lack of material definition of structural elements, the inaccuracy in the definition of beams and pillars that respond more to architectural needs on BIM rather than to structural ones. Similarly, also the inaccuracy in the definition of the boundary conditions.

Therefore, the following points are suggested to the BIM developers in order to be able to easily extrapolate from Revit into a structural model that may be useful for vulnerability analyses. In particular it is necessary to essentially define in Revit:

- the material, the precise geometry, the cross section for all drawing elements such as beams or the thickness in the case of shells for walls and floors. They are the distinctive properties that are associated to the finite within a classic structural analysis code.
- the kinematic constraints and the connection between the various structural elements to satisfy compatibility and the consistency.
- the loading distribution for all the building elements. They are the structural dead loads (weight of building materials, concentrated masses, e.g. machinery, etc.).

Figure 1 shoes the extrapolation of a building specimen from Revit to SAP, while Figure 2 shows the application to the case study of a real school building.

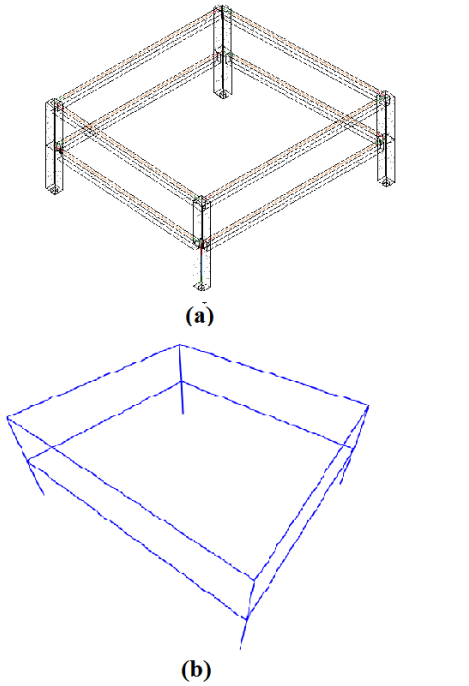

Figure 1. An example of extrapolation from Revit to SAP: (a) Revit 3D model; (b) SAP model; (c) Revit material sheet.

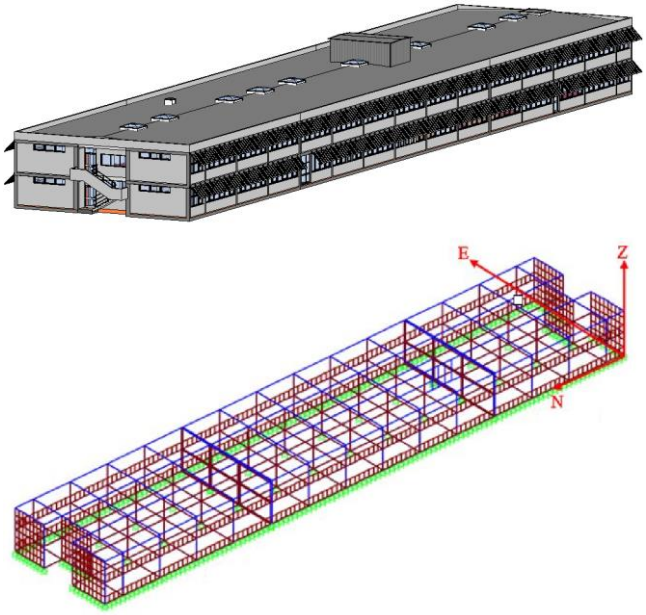

Figure 2. Mascagni school model in Revit and SAP2000

4 CASE STUDY

The "Mascagni School" is a reinforced concrete building located in Melzo (MI) built in 1976. The school consists of three separated structures including classes, gym and canteen. Figure 3 shows the overall view of the school. Only the main building including the classes is analyzed in this research.



Figure 3. Building overall view

The main structure (Classes) is a two storey building with a rectangular plan about 98.5 m x 20 m and the height of 6.8 m. This building is composed of three different blocks separated by two expansion joints. During the inspection, it was observed that the space in expansion joints is about 3cm filled with polystyrene material (Figure 4).

4.1 Material test

The only available information about the school can be found in a BIM model (created by Politecnico di Milano), while it lacks a lot of information to create a detailed FEM model. Therefore, a site inspection was performed on November 14th 2018 to get the required data. A

series of non-destructive tests were conducted to obtain the structural parameters such as module of elasticity and material strength (using sclerometer), test with thermal camera (to identify the structural elements), test using pacometer (to specify the element reinforcement). Finally, the obtained information was used to integrate the BIM model.

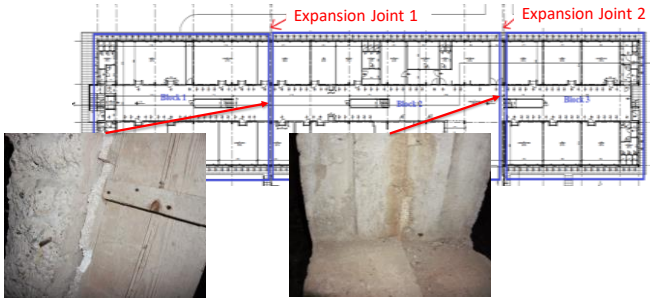

Figure 4. Expansion Joints filled with polystyrene material

4.2 Test with thermal camera

Thermal camera was used to detect the hidden structural elements such as columns and beams. The device is an infrared camera able to detect the different degrees of irradiation emitted by the different surface materials. Figure 5 shows an example of the test performed in canteen building identifying beams and column. The concrete elements (blue areas) have a lower temperature with respect to the masonry elements, lighting systems and aluminum ventilation elements (orange and yellow areas).

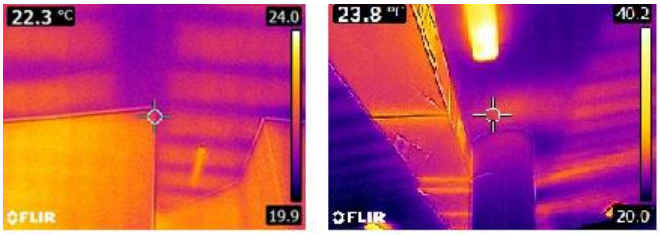

Figure 5. Constructional element identification using thermal camera

4.3 Test with sclerometer

To have some indications on the materials strength, non-destructive tests have been performed with sclerometer (concrete hammer test). This device measures the rebound value R. Using the conversion tables, it is possible to determine the value of the compressive strength based on the magnitude of the measured rebound. The concrete to be examined must be free from any coatings (such as a column) to show the surface of the elements. The test was performed directly on the beams and columns surfaces since they were not covered fully with any material (Figure 6). E.g., the test was performed to determine the strength of two columns located at the ground floor. They have two different dimensions (25x50 cm and 30x50 cm) as representative of the typical columns of the building. The results show that the average concrete strength of the columns is equal to 31.5 MPa. Therefore, the concrete class C25/30 can be used to integrate the BIM.


Figure 6. Constructional element identification using concrete hammer test

4.4 Test with pacometer

A pacometer was used to get information about the reinforcement inside the reinforced concrete elements, such as location, cover and size of steel reinforcement bars. The tests consist in the measurement of the magnetic field determined by the presence of steel reinforcements near the concrete surface of the structural elements.

4.5 Dynamic test

A pacometer was used to get information about the reinforcement inside the reinforced concrete elements, such as location, The validation of the FE model of the school building, as extrapolated from the BIM, has been performed by means of dynamic tests (Domaneschi et al., 2017, Cimellaro and De Stefano, 2014). A wireless sensor network has been employed for collecting acceleration records in different positions on the school building. It consists in both MEMS and force balance triaxle acceleration sensors. To assess the efficiency of

the different type of accelerometers both ambient vibration tests and forced dynamic tests have been performed. In the last case a vibrodyne facility able to apply harmonic forces on the structure has been employed. It has been applied to a reinforced concrete element, the elevator containment (Figure 7).



Figure 7. Application of the vibrodyne on the shear wall

Different accelerometers configurations were considered during the test to analyze the building dynamic response assuming that the main building is separated in three blocks. The accelerometers registered the ambient noise for a duration of 15 minutes. Figure 8 shows as an example the accelerometers configuration used to identify the dynamic response for the first block.

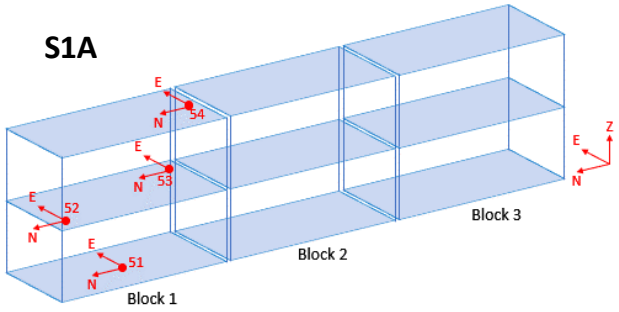

Figure 8. Accelerometers configuration for 1st block

The finite element model has been validated by comparison with the natural vibrations frequencies as identified from the dynamic tests. Data analysis was performed with two different output-only methodologies: Frequency Domain Decomposition (FDD) and Random Decrement Technique (RDT). Output-Only methods are often used when there is not the possibility to apply a measurable input to record the corresponding system response. For the case of vibrodyne test, the data was processed by using Frequency Response Function (FRF) to verify the results obtained through the ambient test. Figure 9 depicts as an example the frequencies comparison for the first block of the school building at the north direction.

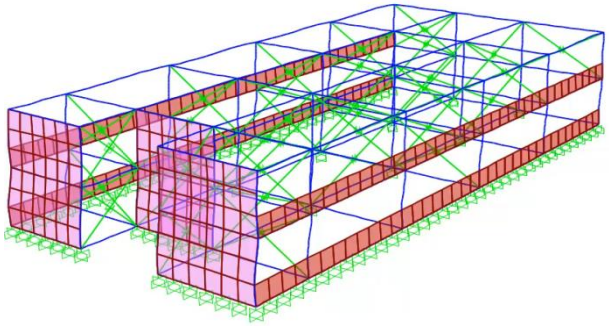

(a)

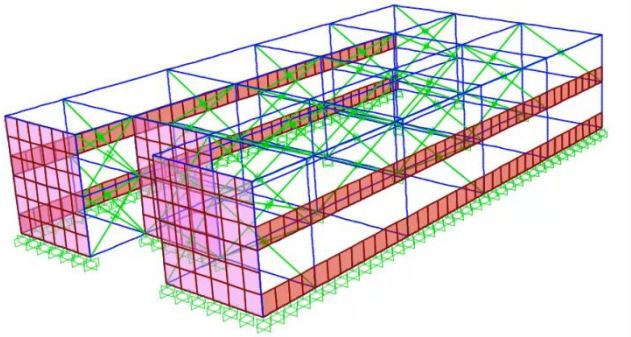

(b)

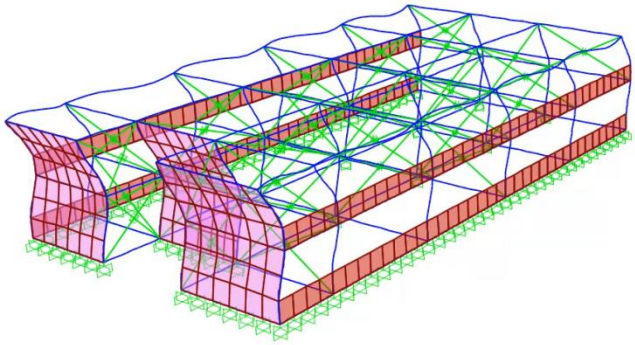

(c)

	Modes	FDD [Hz]	RDT [Hz]	FEM [Hz]	Participating mass ratio
S1A (1st block)	1st mode	5,33	5,30	5,40	0,91
	2nd mode	6,38	6,50	6,40	0,52
	3rd mode	13,40	13,34	13,20	0,97

(d)

Figure 9. First block 1st mode (a), 2nd mode (b), 3rd mode (c), and comparison between FDD, RTD and FEM frequencies (d)

In addition, the mode shapes deriving from the analysis of the two methods were compared: the Modal Assurance Criterion (MAC) was used to determine the similarity of two mode shapes. If the mode shapes are identical the MAC will have

a value of 1, if the mode shapes are very different, the MAC value will be close to zero.

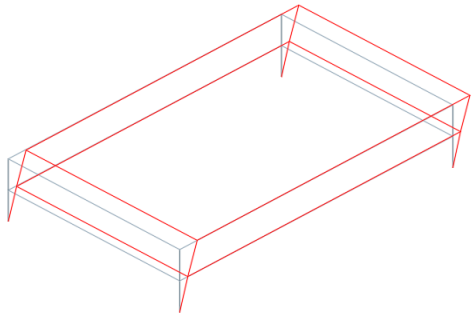

(a)

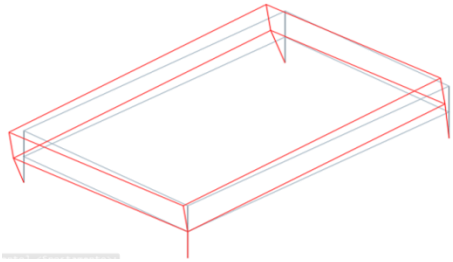

(b)

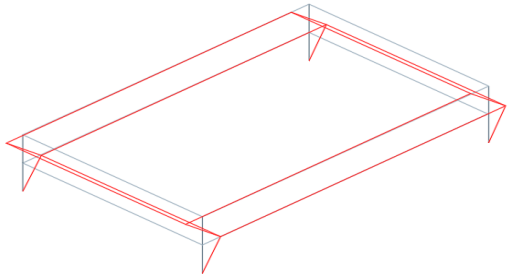

(c)

	Modes	FDD [Hz]	RDT [Hz]
S1A (1st block)	*1st mode*	5,33	5,30
	2nd mode	6,38	6,50
	3rd mode	13,40	13,34

(d)

Figure 10. First block 1st modal shape (a), 2nd modal shape (b), 3rd modal shape (c), and comparison between FDD, RTD and MAC

To verify the results of the ambient vibration, the frequencies were also calculated by using a different approach (FDD and FRF) induced by vibrodyne. A vibrodyne was fixed on the shear wall of the first block applying the force only in north direction. Figure 11 shows the position of vibrodyne and the configuration of the accelerometers within the first block. The results of FRF method have been transformed from amplitude and phase to real and imaginary parts. The real part is equal to zero at natural/resonant frequencies while the imaginary part with the peaks indicates resonant frequencies. The direction of the peak can be used to determine the mode shape associated with the natural or resonant frequencies. Figure 12 shows the result of FRF analysis.

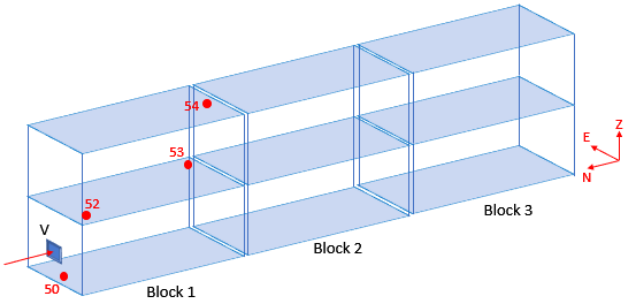

Figure 11. Accelerometers configuration for 1st block during the vibrodyne test

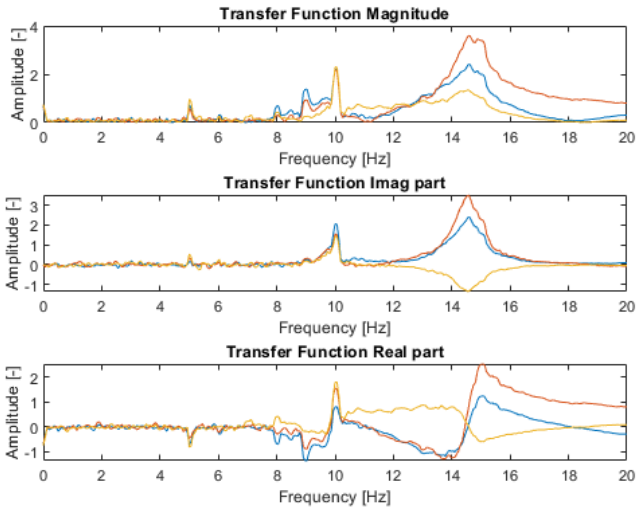

Figure 12 FRF results of the first block for the vibrodyne test in north direction

In addition, Table 1 reports the comparison between the output-only methods results with the frequency response function ones. Results confirms the accuracy of FEM calibration.

Table 1. Vibrodyne dynamic response for the first block at north direction

Mode	FDD [Hz]	Mode Shape	Damping [%]
1st	5	[0,1726 0,3459 0,5486]	1,04
2nd	10	[2,0624 1,5417 1,4339]	0,93
3rd	14,61	[2,3892 3,4352 -1,3046]	3,95

4.6 Seismic vulnerability

The extent to which a structure suffers a certain level of damage facing a given seismic event is termed as seismic vulnerability. Following the current Italian technical prescription, the assessment of seismic vulnerability for all public buildings is required to their redevelopment, with particular reference to schools. The parameters that can influence

seismic vulnerability are the structural type, age of construction, number of floors and maintenance status of the building. In particular, the following vulnerability index is reported:

$$\zeta_E = \frac{F^*}{F_{NTC}} \quad (1)$$

where F^* is the maximum bearable seismic action and FNTC is the seismic action that should be used for designing the same structure accordingly with the current Italian standard DM NTC 2018. The value at the numerator can be computed through different methodologies at increasing complexity. For regular structures, static nonlinear analyses (pushover) could be selected. The transition from the linear range could be selected as the maximum bearable seismic action. However, it is worth noting how the standard does not give any other prescription about modelling and it can be interpreted as an implicit recognition of the uncertainties of the problem and the singularity of each structure.

The evaluation of the seismic capacity for the structure should allow estimating a safety margin moving the problem from the seismic hazard characterization at the site to the structural fragility. Such perspective could be also useful for the national authority for tracing the general condition of the existing building asset, built often more than fifty years ago, in times when earthquake engineering was less developed.

5 CONCLUSIONS

This research highlights how a suitable guideline allows to implement a BIM model that could be easily used for assessing seismic vulnerability. Usually, for instance the BIM model case study may have some interoperability problems and need possible modifications. The methodology proposed in this paper and validated with the case study can be applied for a faster and more efficient assessment of the seismic vulnerability coefficient of the building stock. This is a useful support tool for decision makers and owners to efficiently assess priorities and interventions.

ACKNOWLEDGMENTS

The research leading to these results has received funding from the European Research Council under the Grant Agreement n°ERC_IDEalreSCUE_637842 of the project IDEAL RESCUE - Integrated DEsign and control of Sustainable CommUnities during Emergencies.

REFERENCES

Becerik-Gerber, B., Jazizadeh, F., Li, N. & Calis, G. 2011. Application areas and data requirements for BIM-enabled facilities management. *Journal of construction engineering and management*, **138**, 431-442.

Cimellaro, G. P. & De Stefano, A. 2014. Ambient vibration tests of XV century Renaissance Palace after 2012 Emilia earthquake in Northern Italy. *Struct. Monit. Maint*, **1**, 231-247.

Di Giuda, G., Villa, V. & Loreti, L. Definition of Incremental Information Data for BIM-based Project. Back To 4.0: Rethinking The Digital Construction Industry, 2016. Maggioli Editore, 29-38.

Di Giuda, G. M., Villa, V., Tagliabue, L. C., Giana, P. E., Rinaldi, S. & Ciribini, A. L. C. Refurbishment and school buildings management in a smart building environment. *AIP Conference Proceedings*, 2018. AIP Publishing, 030070.

Domaneschi, M., Sigurdardottir, D. & Glisic, B. 2017. Damage detection on output-only monitoring of dynamic curvature in composite decks. *Structural Monitoring and Maintenance*, **4**, 1-15.

Dong, B., O'neill, Z. & Li, Z. 2014. A BIM-enabled information infrastructure for building energy Fault Detection and Diagnostics. *Automation in Construction*, **44**, 197-211.

Eastman, C., Teicholz, P., Sacks, R. & Liston, K. 2011. BIM handbook: A guide to building information modeling for owners, managers, designers, engineers and contractors, John Wiley & Sons.

Fema, F. 2006. 445. Next-Generation Performance-Based Seismic Design Guidelines Program Plan for New and Existing Buildings. Redwood City.

Moretti, N., Mainini, A., Tagliabue, L. C., Maltese, S., Dejaco, M., Villa, V., Di Giuda, G., Poli, T., Ciribini, A. L. C. & De Angelis, E. Data-driven energy retrofit per gli edifici scolastici. *Colloqui. AT. e 2017. Demolition or reconstruction?*, 2017. Edicom Edizioni, 1121-1131.

Shiau, J., Vimonsatit, V., Yazdani, S. & Singh, A. 2018. Streamlining information transfer between construction and structural engineering. ISEC Press.

Volk, R., Stengel, J. & Schultmann, F. 2014. Building Information Modeling (BIM) for existing buildings—Literature review and future needs. *Automation in construction*, **38**, 109-127.

Welch, D. P., Sullivan, T. J. & Filiatrault, A. 2014. Potential of building information modelling for seismic risk mitigation in buildings. *Bulleting of the New Zealand Society for Earthquake Engineering* **47**(4):253-263.