POLITECNICO DI TORINO
Repository ISTITUZIONALE

Technologies and techniques offering new interpretations of the landscape evolution

Original
Technologies and techniques offering new interpretations of the landscape evolution / Semeraro, F., Fonsati, A., Rapetti, N., Osello, A.. - In: DISEGNARE CON.... - ISSN 1828-5961. - ELETTRONICO. - 12:22(2019), pp. 1-9.

Availability:
This version is available at: 11583/2757132 since: 2019-10-01T19:22:37Z

Publisher:
Università dell'Aquila

Published
DOI:

Terms of use:

This article is made available under terms and conditions as specified in the corresponding bibliographic description in the repository

Publisher copyright

(Article begins on next page)

27 November 2026

ISSN 1828-5961



Francesco Semeraro
was born in Montalbano (BA) on 14.04.1991. He received a graduate Building Engineering degree at Politecnico di Torino in 2014. He was Research Fellowship at Politecnico di Torino and he is now a PhD Candidate in Urban and Regional Development. His research activity is related to BIM for design and management of infrastructures, working both at DrawingTOtheFuture lab and ANAS.



Arianna Fonsati
was born in Turin (TO) on 20.02.1992. She received a graduate Architecture degree at Politecnico di Torino in 2015. She was Research Fellowship at Politecnico di Torino and she is now a PhD Student in Urban and Regional Development. Her research activity is related to BIM Standards development and implementation, working both at DrawingTOtheFuture lab and Lombardi Ingegneria.



Niccolò Rapetti
was born in Turin (TO) on 02.02.1987. He received a graduate Architecture degree at Politecnico di Torino in 2014. He was Research Fellowship at Politecnico di Torino and he is now a PhD Candidate in Urban and Regional Development. His research activity is related to BIM for design and management of infrastructures, working both at DrawingTOtheFuture Lab and ANAS.

Technologies and techniques offering new interpretations of the landscape evolution

The need for specific documents in terms of environment and landscape has its origin in late eighties, when in Italy both at European and Regional level several dispositions related to the improvement of the landscape quality came out to guarantee the compatibility of territorial transformations. Within this traditional context, how innovative, mainly BIM-oriented, technologies can be useful in offering new ways of interpretation for the landscape planning and safeguarding? The aim of the present work is to read and translate landscape elements using digital BIM-oriented platforms, in order to develop an optimized procedure to collect/organize/implement data and define guidelines for landscape and visual impact assessment; furthermore, the aim is to understand the limits that are still present within available tools. After having read the features of the territory another key point is the creation of digital parametric libraries to represent environmental mitigation works. As far as visual mitigation works are concerned, visibility analysis of the infrastructure is possible through Virtual and Mixed Reality. Once the modeling of specific components is performed, they can be located within the contextual model, where outputs related to the "whole" can be extracted and updated afterwards. New digital technologies and techniques undoubtedly offer new interpretation scenarios of the landscape evolution; nevertheless, there are still strong limits related to the interactions among these tools. The present work provides a valid methodology to involve landscape and urban planning in the BIM process. The research also proposes a series of BIM oriented tools and software to develop a typical output (landscape report) required during the design process, useful for landscape architects.



Anna Osello
was born in Locana (Turin, Italy) on 30.09.1967. She is Full Professor of Drawing in the Department of Building Engineering and Territorial Systems at Politecnico di Torino. She received a graduate Civil Construction Engineering degree at "Politecnico di Torino" in 1992. Since 2005, she is responsible of a research group on Building Information Modeling and coordinates the DrawingTOtheFuture Lab.

Keywords:
BIM, landscape, environment, information management, VAR

(cc) BY-NC

ISSN 1828-5961

INTRODUCTION

In the Medieval Age, "landscape" was used as a synonym for "region" and "territory" in most of the Germanic languages; from the beginning of the XV Century landscape became a pictorial genre. The use of landscape as a scientific term is relatively new. Today, landscape refers not only to a phenomenon described and analyzed by scientific methods, but also to a subjective experience which has perspective, aesthetical, artistic and existential meaning [1]. It is characterized by dynamic and frequent changes.

Currently the built environment, in economic terms, uses and functions, can be categorized in three different areas: infrastructure, landscape and architecture. Infrastructure is associated to public works designed by civil engineers, architecture is buildings designed by architects, and landscape is something a bit more difficult to define, but related to the figure of landscape architects [2]. Even if the awareness for an integrative urban design is perceived as a key principle in infrastructure design, the contemporary fragmented sector of competences fails to obtain the predicted objectives. Though there are interesting examples of multi and interdisciplinary design-related research on the infrastructural landscapes themselves, the potentials of infrastructure for performing the additional task of shaping urban landscapes is largely unexploited [3].

The Information Age could be described by the shift from traditional industry brought by the Industrial Revolution (through industrialization), to an economy based on digital information (computerization). The definition of what digital means (or what information means) continues to change over time as new technologies, user devices, methods of interaction with other humans and devices enter the domain of research, development and market launch. Architecture and engineering fields have been affected by this shift too, transforming traditional processes and code of practices with several benefits in many aspects of their professional activity. Indeed, Building Information Modeling (BIM) is more and more preferred by professionals from the AEC industry, and can be defined as a set of interacting policies, processes and technologies generating a methodology to manage project information throughout the overall life-cycle [4]. Managing the overall life-cycle means that several operative tools need to communicate and share information at each stage. Preliminary design stages of an infrastructure are addressed to manage environmental, urban and regional aspects, with specific tools able to process a big amount of data at larger scale in order to evaluate constraints and to analyze geomorphological characteristics, natural systems, architectural and historical aspects, archaeological aspects and perceptual qualities.

Now Landscape architects use analogue and digital media to research and design urban areas and the countryside [5]. Few examples of the application of urban design tools qualified to interact with BIM environment exist, such as: Geographic Information Systems (GIS) for the analysis, conservation and enhancement of scenic-perspective aspects of landscape [6]; the social potential of web-based technologies in landscape architecture and community design [7]; real-time urban air quality observations and the integration with model information [8]; a holistic multi-D model of a city for different purposes [9]. Furthermore, interoperability of information allows to effectively

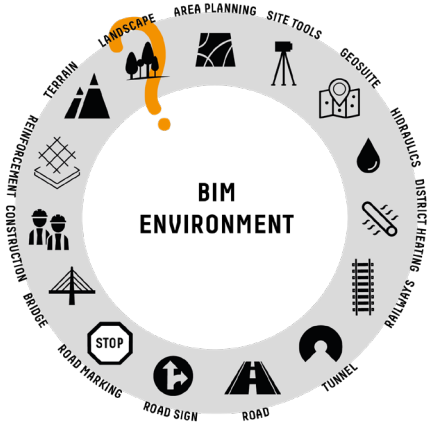

Fig. 1 - Landscape architecture within BIM collaboration environment

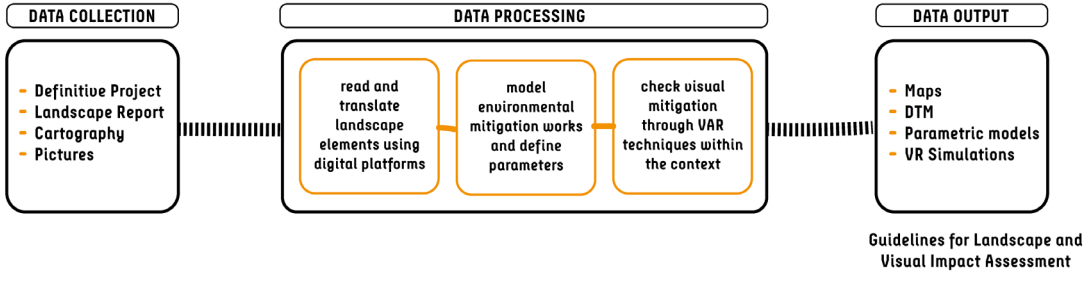

Fig. 2 - Methodological framework

BY-NC

ISSN 1828-5961

integrate disciplines and professionals involved in urban design and planning. Several studies have highlighted the importance of using digital tools in planning to improve understanding of projects in landscape planning and urban planning, and to improve communication among designers, clients and lay citizens [10;11].
Within this context, how innovative, mainly BIM-oriented, technologies and techniques can be useful in offering new ways of interpretation for the landscape planning and safeguarding?
The research work developed proposes a valid methodology to implement BIM-oriented software as tools for the digitalization of the process of interpretation, analysis and design of landscape architecture. Three main aspects of the process have been investigated: a) which data can be used for developing landscape analysis with BIM software, current features and possible implementation; b) how parametric objects can improve landscape planning; c) the role of Virtual and Augmented Reality (VAR) applications for visual impact evaluation purposes.

METHODOLOGY

Encouraging BIM adoption also means using BIM for innovative purposes, following roads less travelled, to identify the importance of BIM in several environments, for instance in architectural landscape design. Landscape professionals should take a positive stance towards BIM-oriented tools, that could work well as decision-support tools within several landscape domains. Innovative tools could work together with traditional methods, at least in a first phase of integrating methods and tools among each other. As discussed before, with the exception of few isolated applications, currently it is not possible to identify an exhaustive methodology setting up a system able to involve landscape architecture design within BIM collaboration. The current research activity aims at defining possible lines of action to achieve specific results by using BIM-oriented tools and methods. The strategy aimed at defining a possible scenario for the BIM implementation and involved the development of a traditional output within the landscape analysis stage, entitled Landscape Report. This document is required by D.Lgs. 42/2004 art.146, clause 3 in Italy and, in this case, has been produced using BIM-oriented tools for a specific case study of an infrastructure project. Furthermore, it was paramount to define BIM standard for Landscape Architecture, highlighting specific requirements and needs that landscape disciplines imply. Such a structured approach of integrating BIM within planning processes could be useful for several case studies, for instance civil engineering projects, urban development and buildings.
The present work aims at defining a methodology able to understand which data is possible to collect and to use in the processing of information related to the analysis of the landscape, taking into account new tools that could help within the process itself.
For this reason, the methodology framework is made of the following main steps: data collection, data processing and data output. In this case, data collection was developed analyzing and using both on-site surveys made with innovative technologies and through the interpretation of available cartography and OpenStreetMap's dataset.
Data collection phase is then followed by the data processing stage, which in turn is subdivided in different subsections, each of them reaching specific objectives in terms of results. Data processing firstly implies the analysis of data previously collected, starting from the description of environmental and landscape characteristics. Landscape-related data is then organized in digital maps containing information such as historical housing systems, agricultural landscapes, historical territorial textures, panoramic routes and particular archaeological and architectural characters. After having identified constraints from Landscape Plans and interpreted landscape elements using digital platforms and having extracted as output digital functional maps, it was necessary to understand how to represent environmental mitigation works designed for the intervention. In this case, the approach included the definition of standardized libraries of objects

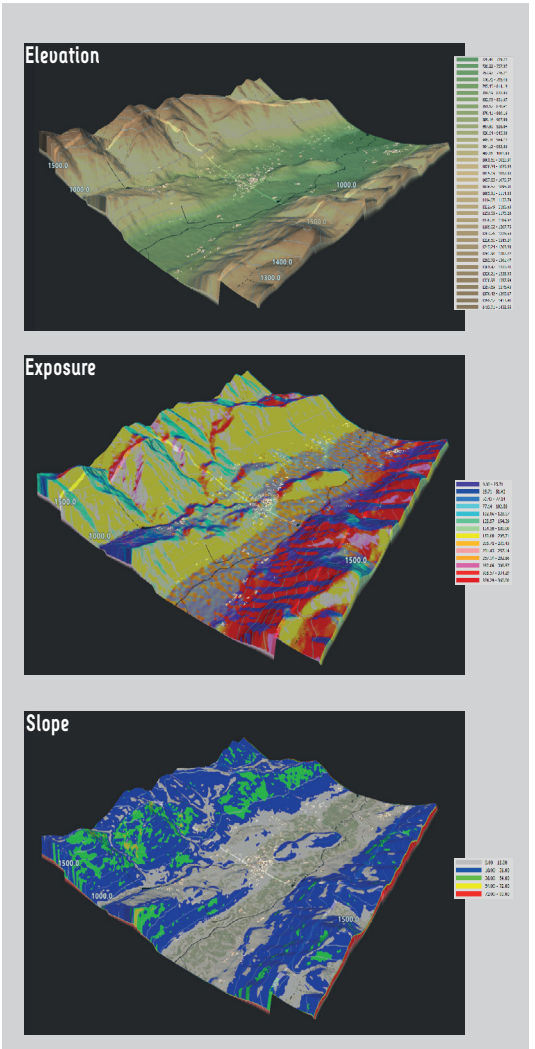

Fig. 3 - Interactions with the terrain model and basic analysis of landscape characteristics

BY-NC

ISSN 1828-5961

as starting point for customized components. To realize that purposes, accurate parameters have been defined and then used to create parametric models, in which objects have been modelled around dimensional and alphanumerical parameters. Lastly, data processing involves a validation phase, in which visual mitigation has been checked through Virtual and Augmented Reality (VAR) techniques, giving the chance to perform a visibility analysis of the infrastructure using these tools. After having modelled specific components, they were placed within the contextual model, where outputs related to the "whole" can be extracted and updated afterwards.
Undoubtedly, Virtual reality has a greater impact than bidimensional images, because it involves an immersive experience in virtual reality including the context and all infrastructures involved, better representing the effective result of the project. Within the methodology, the last step was represented by data output; each step of data processing made a specific result possible and namely:

- the definition of digital landscape maps in which territorial features are stored;
- the extraction of digital terrain models using GIS-data;
- the modelling of standard parametric components useful to represent mitigation works within BIM environment, in order to keep a repository of such data;
- the performance of VAR simulations to better communicate and explain the features of the infrastructure project.

The case study used to develop planned activities as presented before has been the state road n°21 "della Maddalena" – Variant project to Demonte, Aisone and Vinadio residential areas – Part 1: Variant project to Demonte. The intervention has the main objective to transfer the vehicles traffic which weighs on the residential area of Demonte to a new route that surround the town. The preferred alternative for the intervention is composed by two viaducts (Perdioni viaduct of 324 m of extension and Cant viaduct of 135 m) and one tunnel of 635 m, plus some road parts and two roundabouts for the intersection with the existing road.

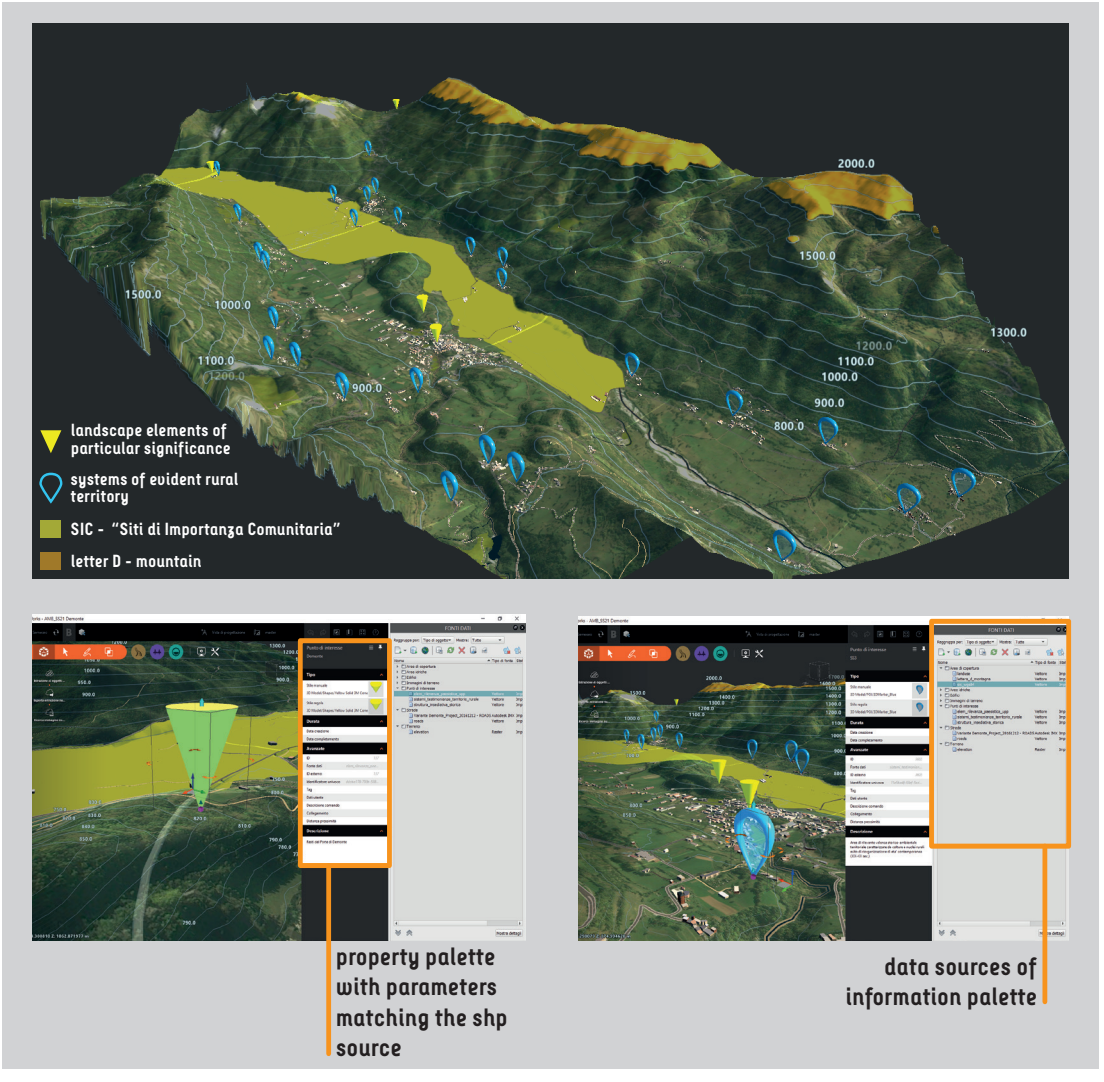

Fig. 4 - Layers of information related to the levels of protection of the landscape. Dynamic interface which displays shape file information in the property palette of each item

BY-NC

ISSN 1828-5961

RESULTS

The Landscape report evaluates the intervention with respect to the current state of the landscape, the valuable elements of landscape which are in it, highlighting the impacts on the landscape of the proposed intervention and elements of mitigation and compensation needed. The evaluation is usually performed analyzing the following main environmental features: i) analysis of the current state of the landscape; ii) analysis of the levels of protection operating in the landscape of interest; iii) landscape compatibility assessment, and in particular: a) simulation of the context post- intervention, b) previsions of the effects of transformations and c) mitigation works needed. The implementation of the aforementioned analysis in the BIM method is possible through the adoption of different tools and taking advantage of the interoperability process, considering that the workflow between GIS and BIM data is not always linear, so it involves a percentage of data losses.

Digital landscape maps

The analysis of the landscape conditions, expressed in points i) and ii) has been managed using a single software environment, which was Autodesk Infraworks. The digital platform was useful to represent the current state of the landscape; in particularfor the creation of the Digital Terrain Model (DTM) and the context modeling. For instance, roads, railway, buildings and water features have been modelled using OpenStreetMap's datasets, while imagery came from satellite imagery from Microsoft Bing Maps that then was draped over the DTM. Interesting features have offered the possibility to enhance the level of accuracy of the model by the integration of on-site surveys, such as point clouds.
Two-dimensional information (both punctual and spatial) typical of the levels of protection have been added to the model using shape files formats (typical of the GIS domain) which were downloaded from the public institution website of interest. The result obtained has been a three-dimensional model of the landscape which can be dynamically queried and explored in order to perform landscape analysis. The automatic creation of maps concerning landscape constraints it is possible only if information is collected in digital formats, otherwise time for converting 2D or text information needs to be taken into account during the process. Furthermore, a low-detailed version of the intervention has been modelled, in order to represent the basis for the compatibility assessment.

Parametric components for mitigation works

Creating parametric components useful for representing mitigation works within the BIM environment is a new challenge for the BIM implementation in landscape architecture and urban planning. Currently, a BIM library does not exist for these type of works and at the same time BIM applications are not ready yet to handle environmental information. The design of mitigation works entails the use of specific modeling software, which are capable to manage a greater level of development (LOD), in order to represent detailed information.
In this context, object libraries are essential considering standard objects as starting point for the definition of specific project-based elements, adapting generic objects to the peculiarity of the case study. Furthermore, a well-thought parametric model is modelled using parameters that can be changed in order to allow for customization as required within the landscape project. A suitable example for the demonstration of the methodology might be the creation of an acoustic barrier, modelled as planned and described within the Landscape Report. In this case, each part of the barrier was modeled using the parametric software Autodesk Revit, including elements such as the steel column, the steel protection profile, the acoustic panel, etc. Once completed this phase, the main problem in using BIM methodology for infrastructure projects in general is the lack of BIM applications able to interact with the road alignment and the ground surface. For this reason, to solve this limitation, a visual script was created

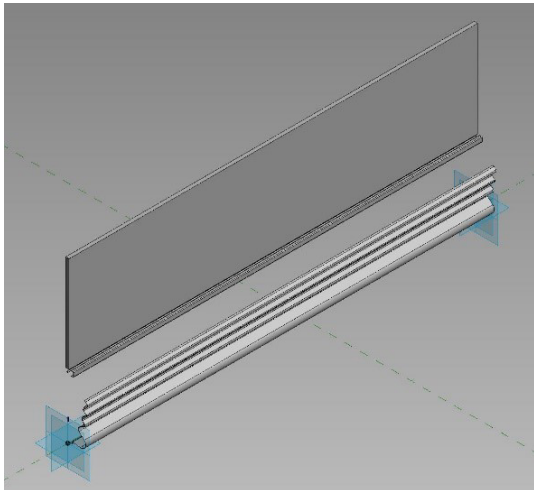

Fig. 5 - BIM parametric Families - Detail 1

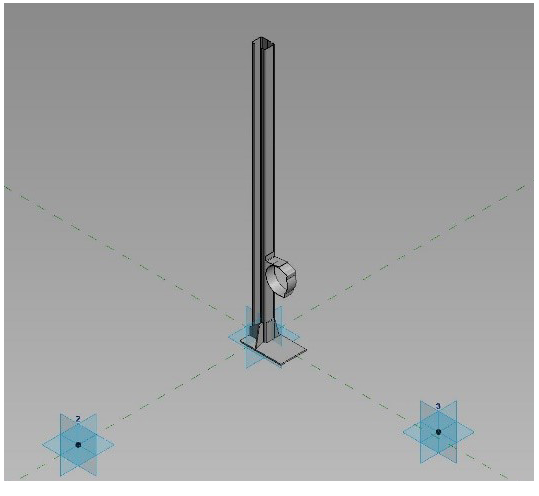

Fig. 6 - BIM parametric Families - Detail 2

BY-NC

ISSN 1828-5961

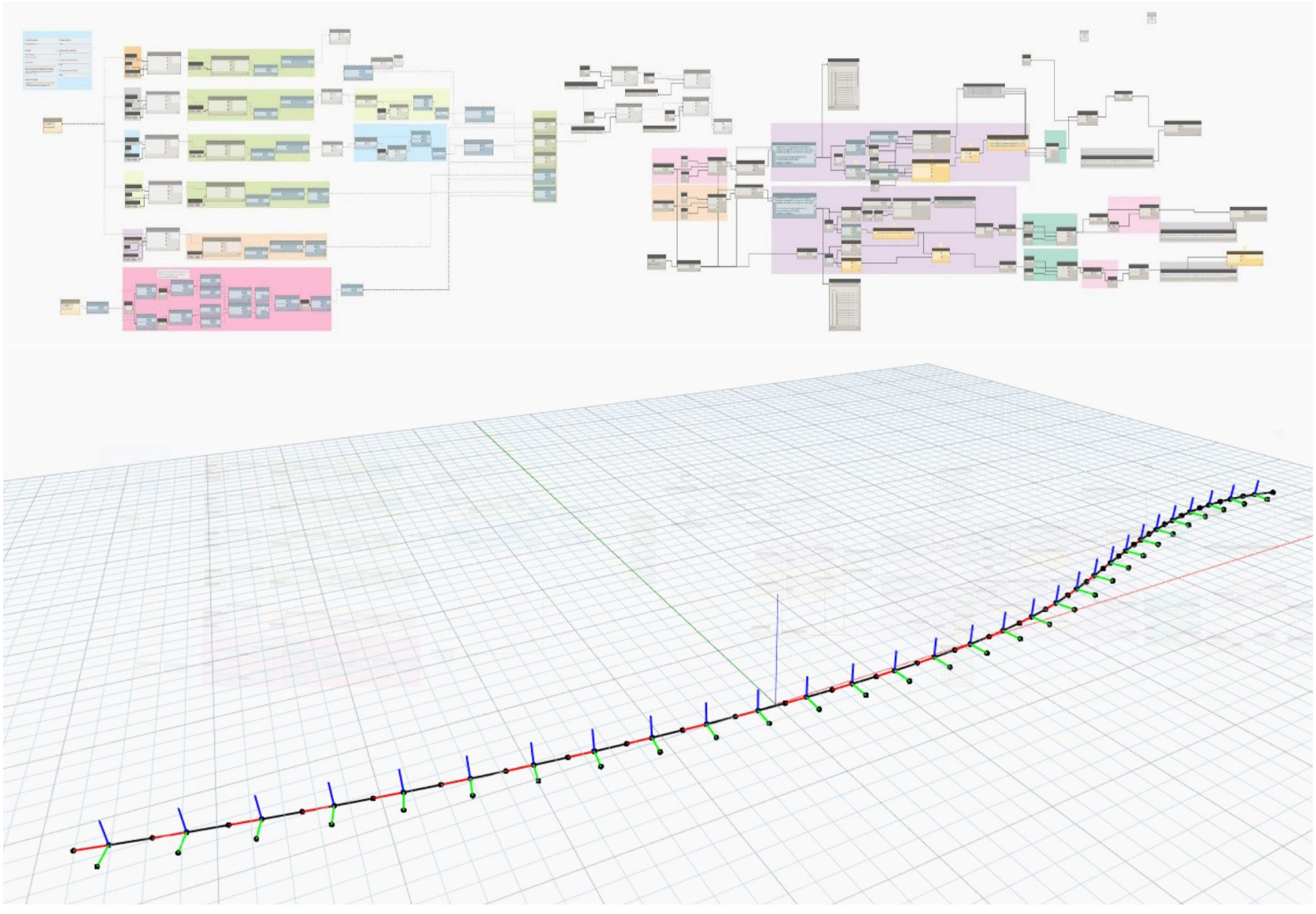

Fig. 7 - Dynamo script for barriers location in the project

BY-NC

ISSN 1828-5961

with Dynamo.
The use of the visual script Dynamo allows to overcome the limitation of the BIM application, providing the possibility to read an alignment and divide it at the characteristic placement points, useful for locating the BIM objects along the path. The advantages of creating a BIM library are many, starting from the design point of view. Indeed, the development of multiple types of the same object, for different level of development, can simplify the design activity of landscape architects. Each parametric object can be also enriched of information by the creation of specific parameters for the storage of heterogeneous data; for example it is possible to connect different types of data such as technical or acoustic sheets, environmental monitoring outputs, regulative constraints, etc.

Visual impact with VAR

The visual impact of the landscape transformation was verified through immersive virtual reality applications. As previously explained, the model including the landscape and the infrastructure was realized within the software Autodesk Infraworks. In order to perform VAR simulations, that model was then exported using a file format compatible with the real-time creation platform chosen, in this case Unity. The file format chosen was the FBX (Filmbox), which provided a direct interoperability between two digital content creation applications. After having imported the model the first step was to scale it in proper dimensions and reassigning textures; the result of this activity was a model with proper textures as assigned in the starting model. The idea was to realize a traditional intervisibility and visual perception map, making it an interactive experience in VR. First of all, the two main visual areas were defined; within these areas several points of view were identified and divided in views where the intervention was visible and views where the intervention was not visible, assigning as reference colors green for the first case and red for the second one. The map was set in order to start the application from a top view where visual cones are visible; the user can

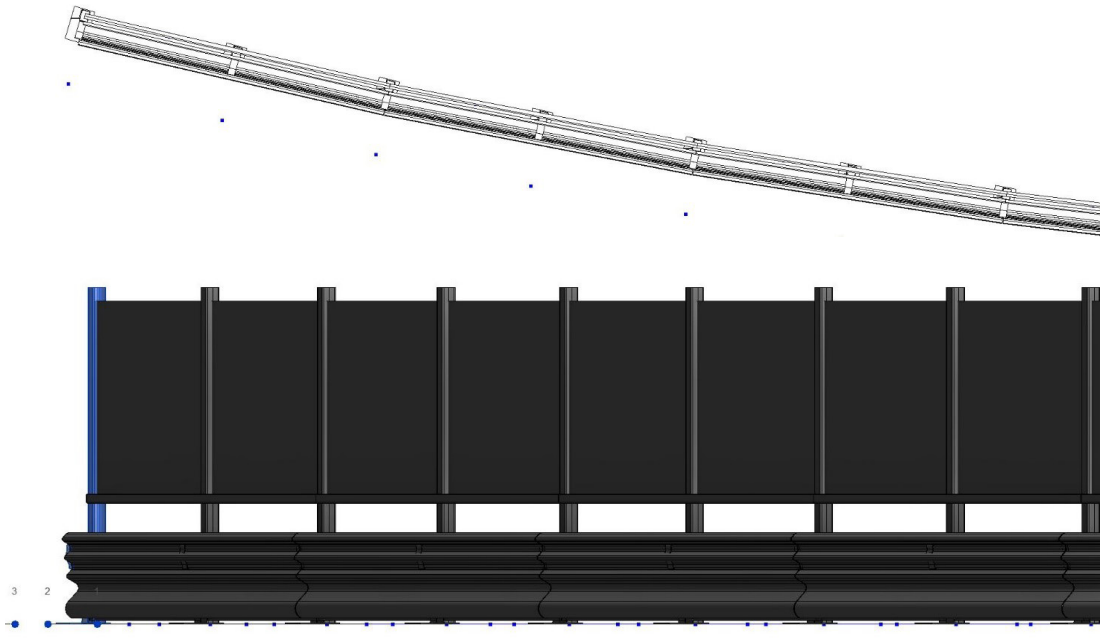

Family: STR_Barriere elementi di protezione ACUSTICA - H2 Load...
Type: STR_Barriere elementi di protezione ACUSTICA - H2 Duplicate...
Rename...

Type Parameters

Parameter	Value
Text	
A_Aspetto	
A_Elemento Strutturale	
A_Progressiva	
A_Reazione al fuoco	
A_Resistenza al fuoco	
A_Tipologia di acciaio	
dBa	20.000000
Materials and Finishes	
A_Materiale Strutturale	<By Category>
Dimensions	
Altezza Guardrail	1.3550
Profondità Infissione	0.6800
Identity Data	
A_Descrizione	
Scheda Tecnica	C:\Users\Niccolò Rapetti\Documents\POLITO\articoli\acustica.pdf
Type Image	
Keynote	
Model	
Manufacturer	
Type Comments	
URL	
Description	
Assembly Code	

GENERALITA'		
PESO	[kg/m]	150 circa
ALTEZZA DA CORDOLO DI FONDAZIONE	[mm]	3000 ± 10
INGOMBRO TRASVERSALE	[mm]	483 ± 5
INTERASSE MONTANTI PRINCIPALI	[mm]	3000 ± 10
ESTENSIONE MINIMA CONSIGLIATA	[m]	81 + elementi d'estremità in caso di installazioni isolate
CARATTERISTICHE ANCORAGGI		n.4 tasselli chimici M24x330 - profondità di posa 215mm
DISPOSITIVO PROTEZIONE MOTOCICLISTA		Pannello AKUSIGMA in lamiera metallica integrato alla base della barriera
PANNELLI FONOASSORBENTI		Pannelli tipo AKUSIT o AKUMETAL in lamiera metallica
PANNELLI FONOISOLANTI		Pannello tipo AKUGLASS in PMMA armato con fili di poliammide

PRESTAZIONI	CLASSE H2		CLASSE H4a	
	VEICOLO LEGGERO	VEICOLO PESANTE	VEICOLO LEGGERO	VEICOLO PESANTE
	W5		W6	
LARGHEZZA OPERATIVA [m]	0,46	1,45	0,46	2,07
POSIZIONE LATERALE ESTREMA DEL VEICOLO "Vi" [m]	N.A.	0,51	N.A.	1,08
DEFLESSIONE DINAMICA "D" [m]	0,13	0,99	0,13	1,61
DEFLESSIONE PERMANENTE [m]	0,11	0,78	0,11	1,48
LIVELLO DI CONTENIMENTO "Lc" [kJ]	40,38	389,56	40,38	662,22
SEVERITA' DELL'ACCELERAZIONE "ASI"	0,995	0,406	0,995	0,563
LIVELLO SEVERITA' D'URTO	A		A	
VELOCITA' TEORICA D'URTO DELLA TESTA "THIV" [km/h]	27,715	7,235	27,715	12,445
DECELERAZIONE POST URTO DELLA TESTA "PHD" [g]	13,059	4,359	13,059	4,156
INDICE DEFORMAZIONE ABITACOLO "VCDI"	LF0001100	N.A.	LF0001100	N.A.
RAPPORTO DI PROVA - CENTRO PROVE "AISICO"	296/2005	300/2005	296/2005	301/2005
NORMA DI RIFERIMENTO	UNI EN 1317-1/2			
OMOLOGAZIONE MIN. INFRASTRUTTURE E TRASPORTI	115/2007		111/2007	
CERTIFICAZIONE CE	N° 238/2131/CPD/2012			
PANNELLI FONOASSORBENTI / FONOISOLANTI	Adattabili in conformità alle specifiche richieste da capitolato tecnico			

Fig. 8 - Acoustic barrier - Plan and Front View - Properties and link to the technical sheet

BY-NC

ISSN 1828-5961

select a specific visual cone by pressing a button with the name of the specific view in order to check the visibility or not of the infrastructure in that specific location. Once moved to that location, the user can check the situation before the interventions by "colliding" with the text "view before intervention"; by getting closer to the text an image representing the current situation appears, in order to make a real-time comparison between the project represented within the model and the situation before the realization of the intervention. The result shows that it is possible to use the model as a direct and interactive mean of communication, to give the chance to experience an immersive navigation within the model representing the project infrastructure, but at the same time to visualize the current situation for real-time comparison between the project and the real context.

CONCLUSIONS

To conclude, new digital technologies and techniques undoubtedly offer new interpretation scenarios of the landscape evolution; nevertheless, there are still strong limits related to the interactions among these tools, mainly related to the automatic connection among outputs extracted from different platforms. Infact, this workflow highlighted the lack of tools currently able to carry out specific analysis for the purpose of a Landscape report. Furthermore, it is necessary to understand the compatibility of tools and objectives, in terms of output; of course these techniques pave the way to new kind of representations at territorial scale. For this reason, it may be advisable to reconsider actual practices in terms of handed output for the purpose of landscape analysis, in order to find a way to integrate disciplines that are currently quickly expanding across several sectors. The advice refers not only to professionals of the landscape and urban planning sector but also to Public Institutions which are responsible to share laws and constraints related to the landscape environment, in order to accomplish the objective of the digitalization. The first phases are undoubtedly not easy to overcome, but as it happened within other sectors, coming across with

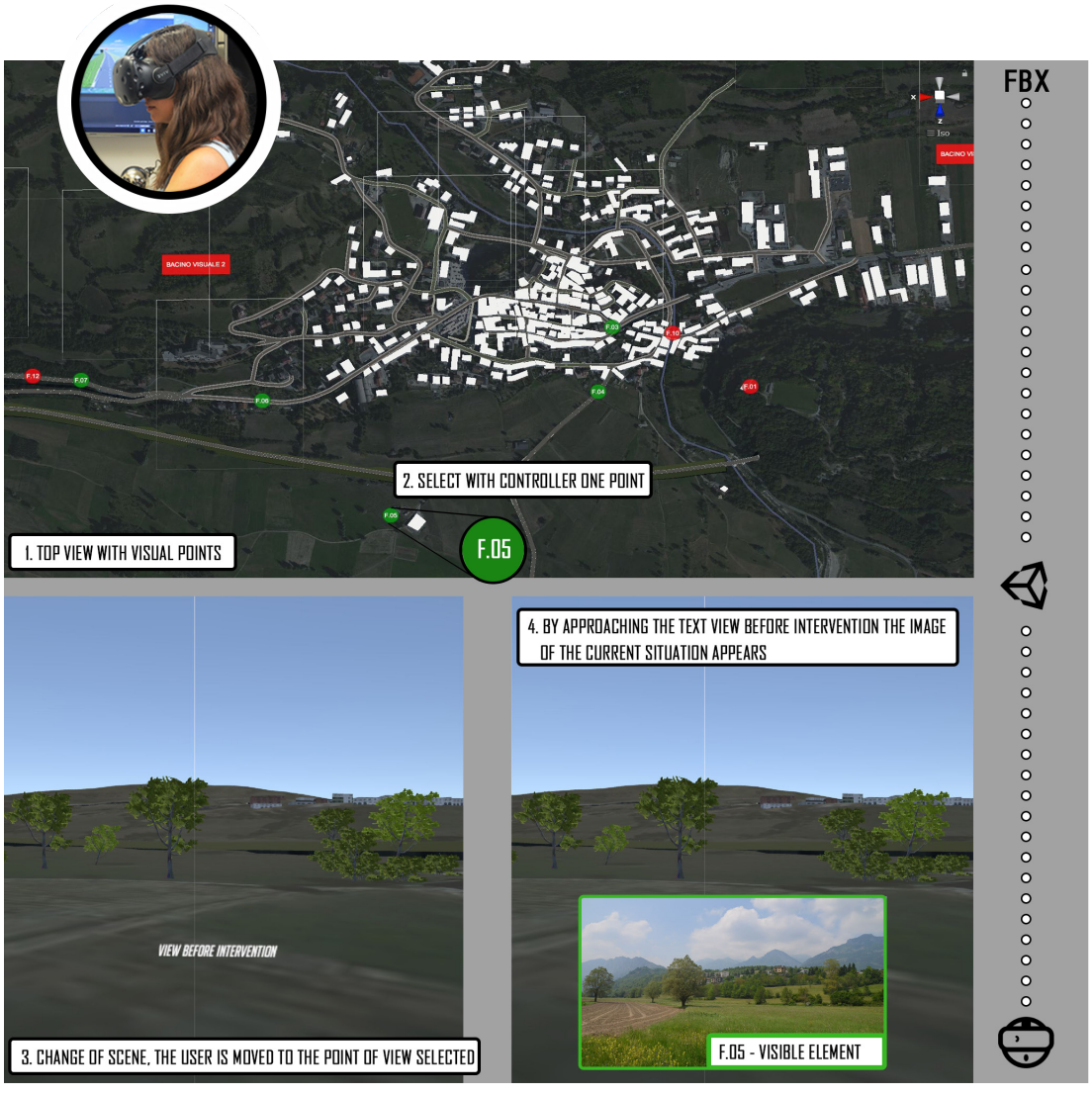

Fig. 9 - Acoustic barrier - Plan and Front View - Properties and link to the technical sheet

BY-NC

ISSN 1828-5961

the BIM environment is unavoidable nowadays. For this reason, it is recommended to be prepared and qualified to face the new challenges to come and getting experiences to achieve specific results with these tools and methods, in order to be aware of both benefits and issues.
Above all the difficulties, the present work provides a valid methodology to involve landscape and urban planning in the BIM process. The research also proposes a series of BIM oriented tools and software to develop a typical output, the Landscape report, required during the design process, useful for landscape architects. Further steps would include a development of this draft application in order to define a collaborative platform in which all data related to documents such as landscape reports are stored. The ideal situation would include the chance to re-use already set information, in order to optimize the first phases of analysis and study of the context and shorten times by avoiding delays.

NOTES

[1] Antrop, M. (2005). Handling landscape change. In *Proceedings of ECLAS 2005 Conference: Landscape change*, Ankara, September 2005.

[2] Jauslin, D. (2015). Infrastructure as landscape as architecture. In S. Nijhuis, D. Jauslin, & F. van der Hoeven (Eds.), Flowscapes. Designing infrastructure as landscape, *Research in Urbanism series*, 3 (1), 229-251.

[3] Strang, G. L. (1996). Infrastructure as landscape. *Places*, 10 (3). Retrieved September 9, 2019, from http://escholarship.org/uc/item/6nc8k21m.

[4] Succar, B. (2009). Building information modelling framework: A research and delivery foundation for industry stakeholders. *Automation in Construction*, 18 (3), 357-375.

[5] Lange, E., & Gill, L. (2013). *Vizualizing landscapes*. London: The Routledge Companion to Landscape Studies.

[6] Cassatella, C. (Ed.) (2014). *Linee guida per l'analisi, la tutela e la valorizzazione degli aspetti scenico-percettivi del paesaggio*. MiBACT Direzione Regionale per i beni culturali e paesaggistici del Piemonte - Regione Piemonte - Interuniversity Department of Regional and Urban Studies and Planning (DIST), Politecnico di Torino.

[7] Ruggeri, D., & Young, D. (2016). Community in the information age: Exploring the social potential of web-based technologies in landscape architecture and community design, *Frontiers of Architectural Research*, 5 (1), 15-26.

[8] Schneider, P., Castell, N., Vogt, M., Dauge, F. R., Lahoz, W. A., & Bartonova, A. (2017). Mapping urban air quality in near real-time using observations from low-cost sensors and model information. *Environment International*, 106, 234-247.

[9] Matthys, M. (2015). "Ghent 3D, in 4th Dimension", Startup for a Holistic Multi-D City Model, using Augmented Virtuality. In *REAL CORP 2015. PLAN TOGETHER – RIGHT NOW – OVERALL. From Vision to Reality for Vibrant Cities and Regions. Proceedings of 20th International Conference on Urban Planning, Regional Development and Information Society*, 797-802.

[10] Bilge, G., Hehl-Lange, S., & Lange, E. (2014). Use of Mobile Devices in Public Participation for the Design of Open Spaces. In Wissen Hayek, U., Fricker, P., & Buhmann, E. (Eds.) (2014). *Peer Reviewed Proceedings of Digital Landscape Use of Mobile Devices in Public Participation for the Design of Open Spaces. Proceedings of Digital Landscape Architecture 2014 at ETH Zurich.* Berlin/Offenbach: Herbert Wichmann Verlag.

[11] Mengots, A. (2016). Review of digital tools for landscape architecture. *Scientific Journal of Latvia University of Agriculture, Landscape Architecture and Art*, 8.8: 72-77.

BY-NC