POLITECNICO DI TORINO
Repository ISTITUZIONALE

A microbial fuel cell measuring system for corrosion assessment

Original
A microbial fuel cell measuring system for corrosion assessment / Iannucci, Leonardo; Parvis, Marco; Grassini, Sabrina; Angelini, Emma; Cristiani, Pierangela; Ferrero, Roberto. - ELETTRONICO. - (2018), pp. 1-5. (Intervento presentato al convegno 2018 IEEE International Instrumentation and Measurement Technology Conference, I2MTC 2018 tenutosi a Royal Sonesta Hotel, usa nel 2018) [10.1109/I2MTC.2018.8409779].

Availability:
This version is available at: 11583/2712113 since: 2020-02-06T12:48:45Z

Publisher:
Institute of Electrical and Electronics Engineers Inc.

Published
DOI:10.1109/I2MTC.2018.8409779

Terms of use:

This article is made available under terms and conditions as specified in the corresponding bibliographic description in the repository

Publisher copyright
IEEE postprint/Author's Accepted Manuscript

©2018 IEEE. Personal use of this material is permitted. Permission from IEEE must be obtained for all other uses, in any current or future media, including reprinting/republishing this material for advertising or promotional purposes, creating new collecting works, for resale or lists, or reuse of any copyrighted component of this work in other works.

(Article begins on next page)

12 October 2024

© 2018 IEEE. Personal use of this material is permitted. Permission from IEEE must be obtained for all other uses, in any current or future media, including reprinting/republishing this material for advertising or promotional purposes, creating new collective works, for resale or redistribution to servers or lists, or reuse of any copyrighted component of this work in other works.

A microbial fuel cell measuring system for corrosion assessment

Leonardo Iannucci
Dipartimento di Elettronica e Telecomunicazioni, Politecnico di Torino, Torino, Italy

Marco Parvis
Dipartimento di Elettronica e Telecomunicazioni, Politecnico di Torino, Torino, Italy

Sabrina Grassini
Dipartimento di Scienza Applicata e Tecnologia, Politecnico di Torino, Torino, Italy

Emma Angelini
Dipartimento di Scienza Applicata e Tecnologia, Politecnico di Torino, Torino, Italy

Pierangela Cristiani
Ricerca sul Sistema Energetico - RSE SpA, Milano, Italy

Roberto Ferrero
Department of Electrical Engineering & Electronics, University of Liverpool, Liverpool, United Kingdom

DOI: 10.1109/I2MTC.2018.8409779

A microbial fuel cell measuring system for corrosion assessment

Leonardo Iannucci
Marco Parvis
Dipartimento di Elettronica e Telecomunicazioni
Politecnico di Torino
Torino, ITALY
Email: marco.parvis@polito.it

Sabrina Grassini
Emma Angelini
Dipartimento di Scienza Applicata e Tecnologia
Politecnico di Torino
Torino, ITALY
Email: sabrina.grassini@polito.it

Pierangela Cristiani
Institute of Biomolecular Chemistry
CNR
Napoli, ITALY
Email: pierangela.cristiani@rse-web.it

Roberto Ferrero
Department of Electrical Engineering & Electronics
University of Liverpool
Liverpool, United Kingdom
Email: Roberto.Ferrero@liverpool.ac.uk

Abstract— **Microbiologically Influenced Corrosion (MIC) is a huge problem for components put into service in unclean industrial systems and marine environment. Because of this, developing new and more effective testing methodologies for the study of this form of corrosion is surely an important need. An innovative approach consists in the use of Microbial Fuel Cells as environment in which carry out tests to assess the resistance of a specific material to MIC. This new methodology will be described, presenting possible studies that can be performed and information that can be gained. Moreover, a new measuring setup has been developed, that enables researchers to get more specific information about the test, assessing all current flows inside the Fuel Cell. Two different materials (Carbon Steel and Stainless Steel) have been used to carry out different experiments and validate the methodology employed. Results obtained with this measuring system have been then compared with those of a simpler setup, showing the effectiveness of this apparatus in studying MIC.**

Keywords—Microbiologically Influenced Corrosion; Microbial Fuel Cell

I. Introduction

Both unclean industrial systems and seawater are a harsh environment for metals from the corrosion resistance point of view. The presence of salts (chlorides in particular) can lead to corrosion rates much higher than in any other environment. Because of this, specific alloys are designed for these applications and ad-hoc studies must be carried out to characterize their behavior. Moreover, Microbiologically Influenced Corrosion (MIC) is an important form of corrosion in these environments. This form of deterioration can affect both metals and non-metallic materials (such as polymeric paints) and is due to the action of bacteria naturally present in seawater or in soil. Cases of MIC are encountered in pipelines, platforms, wells, cooling systems and storage tanks [1]. Considering the specific case of metals, microorganisms can initiate processes that increase the corrosion rate, catalyzing the redox reactions that occur also in a sterile environment. The most important mechanisms are: concentration cells, cathodic and anodic depolarization and reactions within the biofilm that lead to the production of sulfides or acids [2].

It is thus of paramount importance using suitable techniques in order to characterize the corrosion resistance of a material in an environment containing bacteria. An adequate test should reproduce the environment where the material will be put into service and enable to fully characterize the mechanism responsible for the degradation. Methodologies to study MIC in laboratory are often based on the simple exposition of samples to a solution that replicates the conditions that the component will face when operating [3], [4]. Electrochemical potential of the material can be measured and monitored as a function of the immersion time in order to assess the effect of the aggressive solution on the material; moreover, polarization resistance can be used to quantify the corrosion rate and EIS (Electrochemical Impedance Spectroscopy) to determine the properties of the metallic surface (if a passive film is present or the metal has an electrochemically active behavior) [5], [6].

A more sophisticated methodology for assessing the MIC susceptibility has been proposed about three decades ago by B. Little: the dual cell technique (also named split cell or biological battery) [7]. Two identical electrochemical cells are separated by a membrane; two samples of the same material are immersed in each chamber and then electrically connected. In one of the two cells, bacteria are added to the solution in which the specimen is immersed and the galvanic current between the two electrodes is measured. Actually, the difference in corrosion potential at which the two samples stabilize is due only to the presence of bacteria in one of the two cells, so the influence of this specific mechanism can be

quantified. Indeed, this technique, even if theoretically very elegant, has never been widely applied because it is fairly difficult to realize and furthermore the results are not always compliant with in-field results. Actually, in a dual cell, only one strain of bacteria is inoculated in the chamber, while real cases attest the presence of a large variety of bacteria typologies.

A new approach in the study of MIC is the use of Microbial Fuel Cells. Microbial Fuel Cells (MFCs) are innovative tools that exploit the activity of bacteria in order to produce energy [8], [9]. If they are used for energy production, the electrodes must be not consumed by the reactions involved [10]. In the case of exploiting them for corrosion test, the anode is constituted by the material to be studied and it can also be degraded during the test. In the case of Double Chamber Microbial Fuel Cells, the conception is quite close the one of the dual cell: two chambers are separated by a semi-permeable membrane and only one of the two is in aerobic conditions, while the other is in anaerobic conditions. This difference in electrochemical potential gives rise to a current flow between the anode (the sample in aerobic conditions) and the cathode (the sample in anaerobic conditions) that can be measured and can characterize the susceptibility to microbial corrosion of the material. The main advantage is that in this case a great variety of bacteria strains is present in the cell and this leads to results closer to those encountered in real conditions. A further innovation is represented by the employment of Single Chamber Microbial Fuel Cell (SCMFC). In this configuration, the anode and cathode are represented by graphite clothes covered by living substrates of bacteria; the anode is in anaerobic conditions, while the cathode is in aerobic conditions. The sample is connected to the anode of the cell and inserted in the electrolytic solution (containing bacteria). In this way, the material is tested in an environment characterized by the presence of active bacteria [11] (their activity is demonstrated by the electrical output of the fuel cell before connecting the metallic sample) and current flows between anode and cathode can be fully characterized.

Previous works have used the technology of Single Chamber Microbial Fuel Cells in order to test materials to MIC. Aim of this research work is to specifically measure all the currents flowing inside the fuel cell in order to quantify all the contributions and better understand the mechanism exploited with this cell. The materials under study were Stainless Steel and Carbon Steel, in order to highlight the behavior of the system under different conditions.

II. Single Chamber Microbial Fuel Cell

The Single Chamber Microbial Fuel Cell (SCMFC) is a cell composed of an anode and a cathode immersed in the same electrolytic solution. Anode and cathode employed in this study were carbon clothes with a living biofilm on them [12]; the geometric areas of the two electrodes were respectively of about 16 cm^2 and 9.1 cm^2 (the anode is square-shaped, while the cathode has a circular shape). The inoculum for bacteria inside the solution was wastewater from a depuration plant. The solution volume inside the cell was approximately 0.125 L. The electric power produced by the SCMFC was used as an indicator of the bacteria activity: when the power output dropped to about 1% of the initial output, sodium acetate was added inside the cell to reach a concentration of 3g/L in order to feed the bacteria preventing their death. Organic matter is oxidized by the bacteria and these redox reactions supply the electrons that give rise to the electrical output of the cell. The Fuel Cell operated at a temperature of 30±3°C during the whole experimental activity.

Initially the anode and cathode potentials with respect to a standard Ag/AgCl reference electrode was measured by inserting such electrode inside the cell. Table 1 shows the values measured both with an open circuit and with a load resistance of 200 Ω.

The values appear rather different, so an additional test was performed before starting the tests to understand the reason of such difference. In these preliminary tests the cell power output was characterized as a function of the applied load. A set of resistors of increasing value was connected between anode and cathode and the resulting voltage was measured. Fig. 1 shows the results obtained on two different cells. In both cases a maximum power of the order of 30-40 μW was obtained with resistances of the order of 400 Ω, while for resistances below 200 Ω the power decreased linearly. The behavior is quite similar for both cells therefore the bacterial activity, apart from the absolute anode and cathode potential, can be considered similar. For this reason, all tests were performed by employing a load resistance of 200 Ω corresponding to a current of the order of 400 μA.

III. Materials under study

The materials used for this study were Carbon Steel (Q-Panel standard test substrate, purchased by Q-Lab) and Stainless Steel (AISI 304). The aim was to test the SCMFC under two different conditions: in the first case, by assessing the corrosion behavior of a material characterized by a poor

Table 1 – Anode and Cathode potentials vs Ag/AgCl (3M KCl) in the experimental conditions considered.

Conditions	Anode	Cathode
Open circuit	-444 mV	-132 mV
Load = 200 Ω	-418 mV	-340 mV

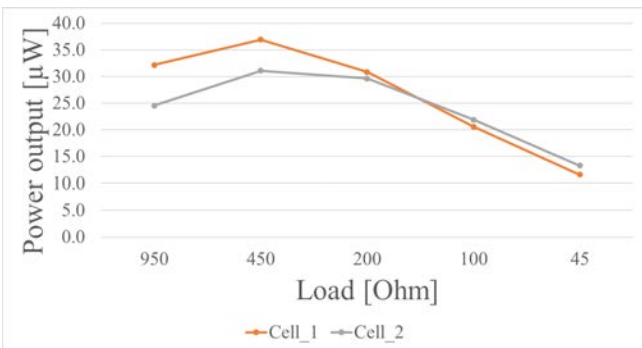

Fig. 1. Power output as a function of the load resistance applied

corrosion resistance to show how the measuring apparatus works and highlight the information gained. In the second case, with a material more appropriate for application involving MIC, to show the behavior of an alloy characterized by passive-active electrochemical behavior. Samples of both metals were cut to the dimensions of 11 mm x 11 mm and then mounted in a polymeric resin. The surface was polished until grit 2000 in order to avoid a preferential attack due to localized defects.

IV. Measuring System

During the exploitation of the fuel cell for energy production, the load is applied between anode and cathode, and the potential drop between the two electrodes can be measured and monitored. In order to carry out the corrosion test, the sample is connected to the anode and immersed in the solution of the cell. In the simple configuration, the voltage between anode and cathode is monitored. If corrosion phenomena don't occur, the output of the cell remains constant as before placing the sample inside the cell. When bacteria start their activity also on the surface of the metal, an additional contribution to the current between the two electrodes is given by redox reactions of the corrosion process. The limit in adopting this basic configuration is that not all the current flows are known and it's not possible to discriminate between the current contribute coming from the anode and the one coming from the sample. Moreover, the presence of a galvanic coupling current could be possible (as the metal and the graphite anode have a different electrochemical potential) but it's not possible to measure it (if present).

In order to overcome these issues, a new measuring setup for corrosion assessment has been proposed. Each one of the three electrodes (anode, cathode and sample) are connected together through three resistors, as illustrated in Figure 2. As can be seen in Figure 3, the resistors have been named respectively R_a, R_s and R_c; through the measure of the potential during the experiment, all currents can be obtained:

$$I_i = \frac{V_i}{R_i}$$

where i stands for each one of the electrodes.

Moreover, R_a and R_c should be chosen in order to have the cell working near to the maximum power point. For the experimental analysis of the system, three 100 Ω resistors have been used (so as to have 200 Ω between anode and cathode). A National Instrument NI USB-6216 acquisition board has been used to acquire measures in real-time.

V. Results and Discussion

The trend of the three potential drops over the three resistors can be seen in Figure 4 (polarity of V_a and V_s has been inverted in the plot for a better readability). Immediately after the immersion of the carbon steel sample inside the cell, a sharp peak of current is detected between the specimen and the cathode, while the anode is almost excluded (the current flowing between anode and cathode drops to zero). After few minutes, the situation develops further: part of the current flows between the sample and the cathode and the anode starts

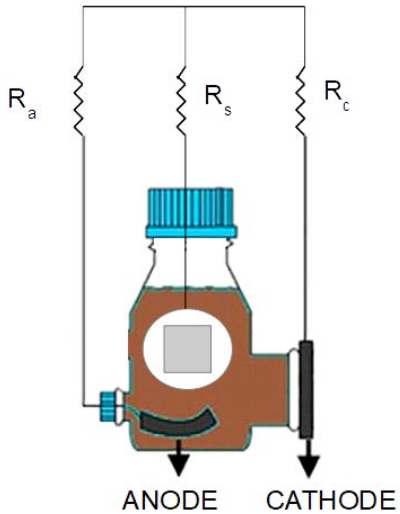

Fig. 2. Scheme of the MFC with resistors applied for the measure

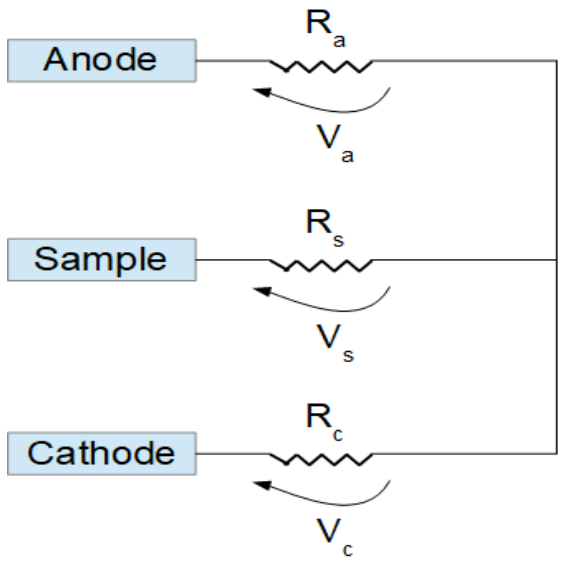

Fig. 3. Indication of resistors applied and voltages measured

again in providing electrons to the cathode. This condition goes on for the first hour, when again the current flows only between the sample and the cathode. These changes can be attributed to the stabilization of the electrochemical potential of the metallic specimen inside the solution, which requires time. During the whole test, the anode is excluded from current flows inside the Fuel Cell, because it stabilizes at a potential higher than the steel. After five hours of immersion, extensive corrosion of the steel surface can be observed. As an oxide layer grows on the metallic surface, its conductivity decreases, so bacteria are no more able to provide electrons to it. For this reason, current starts to flow again between anode and cathode. The contribute of electrons flowing between the sample and the cathode decreases until reaching almost zero. It can be observed that, at the end of the test (when the sample is still connected and immersed in the solution) the fuel cell goes back to its initial working condition, reaching a potential between anode and cathode equal to the initial one before the immersion

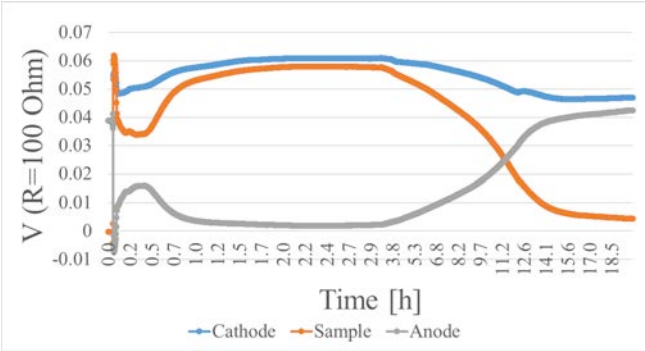

Fig. 4. Voltages measured over Rc, Rs and Ra during the experiment performed with the Carbon Steel sample

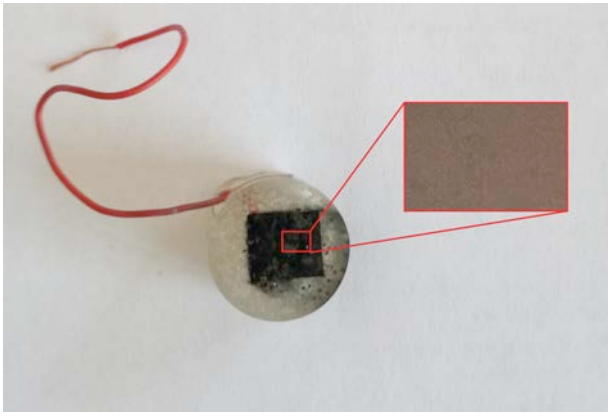

Fig. 5. Picture of the steel sample after the test, with a magnification taken at optical microscope

of the specimen. A further consideration that must be done is that the oxide layer grown on the carbon steel is not a passive one. Thus, it can be estimated that, in the case it should be damaged, the corrosion process would start again oxidizing other layers of the material. Moreover, as it is demonstrated by the measures performed, no galvanic current can be observed between the graphite anode and the metallic sample.

After the test, the specimen has been removed from the cell and dried with ethanol. The surface became black (turning to brownish after few hours) and rough (the appearance of the sample can be observed in Figure 5).

The test involving the AISI 304 gave different results and showed the different behavior of this class of materials (see Figure 6). The immersion of the sample in the fuel cell did not perturb the potential drop between anode and cathode. Current continued to flow only between these two electrodes, leaving the stainless steel unperturbed. As this typology of steels have an higher corrosion resistance, more time is required for bacteria to colonize the metallic surface and start providing electrons also to it (and not only to the anode). During the 19 hours of the experiment, no signs of corrosion were evidenced; because of this, the test was extended to 72 hours, but still no changes occurred. Also from a simply visual point of view, the surface of the specimen did not show any clue of deterioration. These two examples show the great advantage in using this measurement setup instead of the simpler one. Measuring only

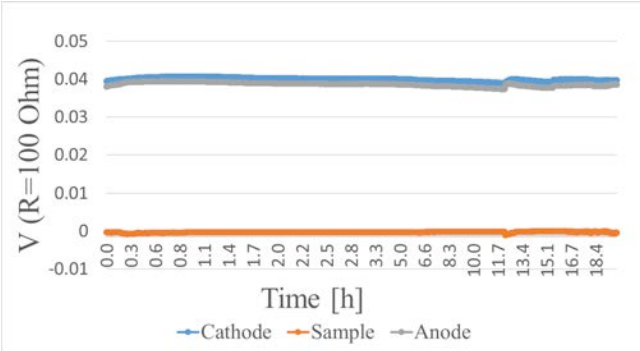

Fig. 6. Voltages measured over Rc, Rs and Ra during the experiment performed with the Stainless Steel

R_c does not discriminate between the contribution of the sample and the one of the anode. Solving all the circuit, it has been possible to assess all current flows and discard the hypothesis of galvanic corrosion between the anode and the cathode. Moreover, the variation in the potential drop measured on the resistance connected to the cathode is much less broad than the variations that can be measured on the two other resistors.

VI. Conclusions

Microbial Fuel Cells are an innovative tool in the study of Microbiologically Influenced Corrosion. The main advantages in using this technology for corrosion assessment are: the simplicity and easiness to carry out tests and the possibility to monitor the system more accurately than what it can be done in traditional immersion tests. Moreover, in a MFC a great variety of bacteria strains is present, so results are more adherent to those found in real world.

A new measuring setup has been proposed to monitor the behavior of a sample inside the Fuel Cell. Assessing all three contributes of the current flowing through the cell, a deeper knowledge on the measuring set-up and of the MIC mechanism can be obtained. The system has been tested with two different types of material and the different results have highlighted the possible responses. Connecting a Carbon Steel sample inside the cell, after a period of stabilization the current flows only between the sample and the cathode, highlighting the corrosion process that affects the material. On the other hand, when a material with higher corrosion resistance is connected inside the cell, the output of the Fuel Cell remains constant. Long-term tests are in this case necessary, because bacteria have to colonize the metallic surface in order to damage the passivation layer present on it. These results have showed the feasibility of using a Microbial Fuel Cell for the assessment of MIC. Further developments can still be performed; for example a real time monitoring of the electrodes potentials could be interesting in order to characterize even better the progress of the test. Moreover, different kinds of samples (e.g. metals protected with organic or inorganic coatings) could also be tested.

References

[1] H. A. Videla, “Prevention and control of biocorrosion”, International Biodeterioration and Biodegradation, 49(4), pp. 259–270, 2002.

[2] C. A. Loto, “Microbiological corrosion: mechanism, control and impact—a review”, International Journal of Advanced Manufacturing Technology, 92(9–12), pp. 4241–4252, 2017.

[3] E. Ilhan-Sungur, A. Çotuk, “Microbial corrosion of galvanized steel in a simulated recirculating cooling tower system”, Corrosion Science, 52(1), pp. 161–171, 2010.

[4] M. Sancy, A. Abarzúa, M. I. Azócar, J. M. Blamey, F. Boehmwald et al., “Biofilm formation on aluminum alloy 2024: A laboratory study”. Journal of Electroanalytical Chemistry, 737, pp. 212–217, 2015.

[5] Q. Qu, , L. Wang, L. Li, Y. He, M. Yang, Z. Ding, “Effect of the fungus, Aspergillus niger, on the corrosion behaviour of AZ31B magnesium alloy in artificial seawater”. Corrosion Science, 98, pp. 249–259, 2015

[6] W. Wang, J. Wang, H. Xu, X. Li, “Electrochemical techniques used in MIC studies”, Materials and Corrosion, 57(10), pp. 800–804, 2006.

[7] B. Little, P. Wagner, F. Mansfield, “Microbiologically influenced corrosion of metals and alloys”. Int. Mater. Rev., 36(6), pp. 253–272, 1991.

[8] K. Rabaey, W. Verstraete, “Microbial fuel cells: Novel biotechnology for energy generation”. Trends in Biotechnology, 23(6), pp. 291–298, 2005.

[9] V. B. Oliveira, M. Simões, L. F. Melo, A. M. F. R. Pinto, “Overview on the developments of microbial fuel cells”. Biochemical Engineering Journal, 73, pp. 53–64, 2013.

[10] B. E. Logan, B. Hamelers, R. Rozendal, U. Schröder, J. Keller, et al., “Microbial fuel cells: Methodology and technology”, Environmental Science and Technology, 40(17), pp. 5181–5192, 2006.

[11] P. Cristiani, M. L. Carvalho, E. Guerrini, M. Daghio, C. Santoro, B. Li, “Cathodic and anodic biofilms in Single Chamber Microbial Fuel Cells”, Bioelectrochemistry, 92, pp. 6–13, 2013.

[12] C. Santoro, Y. Lei, B. Li, P. Cristiani, “Power generation from wastewater using single chamber microbial fuel cells (MFCs) with platinum-free cathodes and pre-colonized anodes”, Biochemical Engineering Journal, 62, pp. 8–16, 2012.