POLITECNICO DI TORINO
Repository ISTITUZIONALE

Design methodology for an air-lubricated seal

Original
Design methodology for an air-lubricated seal / Belforte, Guido; Mazza, Luigi; Visconte, Carmen. - In: TRIBOLOGY INTERNATIONAL. - ISSN 0301-679X. - STAMPA. - 75:(2014), pp. 104-110. [10.1016/j.triboint.2014.03.017]

Availability:
This version is available at: 11583/2543367 since: 2016-02-19T14:06:27Z

Publisher:
Elsevier

Published
DOI:10.1016/j.triboint.2014.03.017

Terms of use:

This article is made available under terms and conditions as specified in the corresponding bibliographic description in the repository

Publisher copyright

(Article begins on next page)

12 October 2024

Design Methodology for an Air-Lubricated Seal

G. Belforte, L. Mazza, C. Visconte

Politecnico di Torino, Department of Mechanical and Aerospace Engineering
Corso Duca degli Abruzzi, 24
10129 TORINO, Italy
Tel: +39 011 090 6907, Fax: +39 011 090 6999, e-mail: luigi.mazza@polito.it

Authors' version (final draft post-refereeing)

Published in:

***Tribology International*, 75 (2014), 104-110**
DOI: 10.1016/j.triboint.2014.03.017

ABSTRACT

A methodology to design an air-lubricated piston seal for pneumatic actuators is described. Such a seal permits a small air leakage through a very narrow gap between the seal lip and the counterpart; this air film both avoids contact and ensures lubrication at the seal-counterpart interface thus permitting reduced friction and wear. Subsequently the use of grease could be limited or avoided. A seal geometry equipped with a self-pressurized balancing chamber was designed to make leakage as insensitive as possible to the supply pressure and to the barrel machining tolerances. A prototype was manufactured and tests were carried out.

Keywords: seals, air-lubricated seals, leakage control, friction reduction

1. INTRODUCTION

Friction is an all-day phenomenon, usually unwanted because of energy dissipation and because of wear of parts by relative motion. In particular, the performances of pneumatic and hydraulic devices are highly affected by friction of seals sliding on the counterpart. Therefore, much research has been addressed to improve the properties of the tribological pair, using a variety of approaches. Some authors studied the effect of hard coatings, applied to metal parts, on the life of seals made of elastomers and polymers working against the coated surface

(Zhuk [1]). Having been proved the possibility to apply a hard film on a deformable substrate without the occurrence of interfacial delamination, the effect of a thin coating of amorphous diamond-like carbon (DLC) or tungsten-containing diamond-like carbon (W-DLC) on elastomeric seals was also investigated (Martinez et al. [2]; Pei et al. [3]). Some authors proposed thick polymer composite coatings by laser cladding and thin hybrid SiOC coatings by atmospheric plasma treatment to reduce significantly the friction coefficient between elastomeric seals and steel in dry conditions (Verheyde et al. [4]).

Some research works analysed the effect of elastomer surface texturing in case of lubricated sliding contact (Shinkarenko et al. [5]; Kligerman and Shinkarenko [6]). Other research works were addressed to seals' compound modification. As an example, some authors evaluated the influence of carbon black content of EPDM rubbers on friction and wear, in case of dry sliding against steel counterparts (Felhos and Karger-Kocsis [7]; Karger-Kocsis et al. [8]; some other authors studied the effect of fillers on the tribological behaviour of PTFE (Conte and Igartua [9]).

Some authors focused their work on the optimisation of the seal cross-section (Belforte et al. [10], [11]). Developing non-contacting devices could be an alternative choice (Belforte et al. [12]; Visconte et al. [13]).

The study herein presented is aimed at designing an air-lubricated piston seal for pneumatic actuators. This unconventional kind of sealing system intends to reduce friction forces and wear by interposing a thin air flow between itself and the sliding counterpart, reducing or avoiding at all the use of lubricant grease. For this reason, this seal must not be intended as a common sealing device, but as a sort of leakage-controlling device. The work was focused on an air-lubricated lip seal to be applied on the piston of a pneumatic cylinder having a 50 mm bore diameter.

2. WORKING PRINCIPLE

In order to contribute to a better understanding of the working principle of an air-lubricated seal, Fig. 1 shows two lip seals mounted on a cylinder piston with faced lips, contrary to the usual assembly. When the cylinder rear chamber is supplied at pressure p_1, the seal on the left side is detached from the cylinder bore so as air is exhausted through a hollow rod; providing a suitable elastic element, the gap thickness *h* can be minimised and consequently leakage can be limited. In this case, in fact, the gap *h* is the result of the balance between the pressure force exerted by the leakage air flow on the seal lip surface ("opening force" in the following) and the reaction force due to the elastic element ("closing force" in the following). The seal on the right side slides against the counterpart almost without pressure load (except for that due to counterpressure p_2).

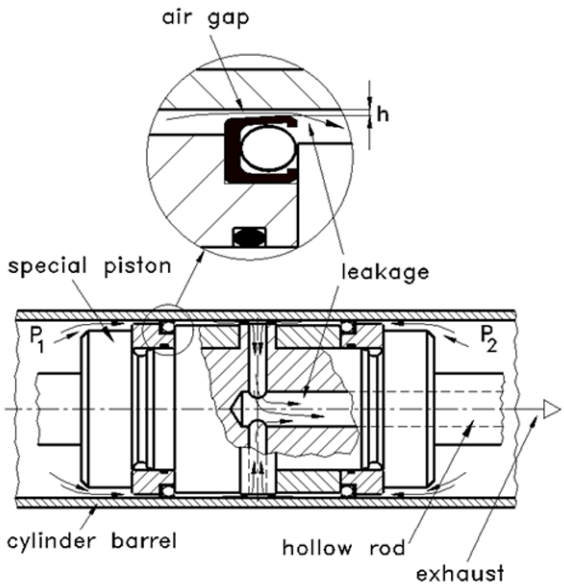

Figure 1: Working principle of an air-lubricated seal

The elastic reaction force needed for the correct operation of this device could be obtained inserting, for example, an O-ring or a spring under the lip seal; a more interesting solution

could be obtained re-designing the seal shape and choosing a suitable material to provide certain elasticity to the seal lip itself.

Such a system would have the great advantage of a low sensitivity to bore tolerances, thanks to the fact that the seal lip becomes self-adaptable and tends to keep the gap *h* constant.

3. DESIGN PARAMETERS IDENTIFICATION

3.1 Preliminary study of a commercial spring-energized lip seal

In order to identify the most important design parameters of an air-lubricated seal and to support a prototype development phase, the behaviour of a commercial spring-energized lip seal, whose cross-section is shown in Fig.2, was preliminary analysed.

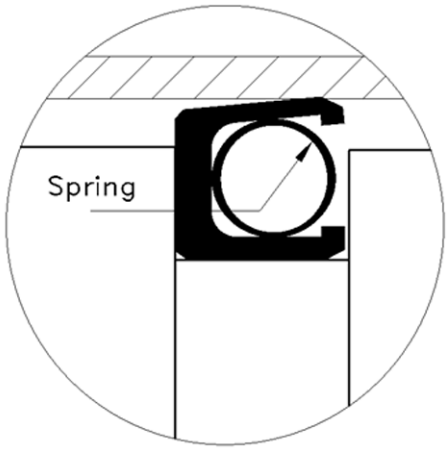

Figure 2: Cross-section of a commercial spring-energised lip seal

According to the assembling scheme shown in Fig. 1, one radial spring-energized lip seal, made of a PTFE jacket and of a steel slant coiled wire spring, was mounted on the piston seat of a modified pneumatic cylinder (Φ= 50 mm), provided by a hollow rod and a transparent barrel. Keeping the rod stationary by a distance ring and increasing the cylinder supply pressure, a progressive detachment of the seal lip from the cylinder bore could be detected by means of a Fizeau interferometer; consequently, the leakage path geometry, corresponding to

each pressure loading, was identified. Details on these preliminary experiments are deeply discussed in [12]. At the same time, flow-rate through the leakage path was measured connecting a flow-meter to the cylinder hollow rod.

On the basis of the optical tests results and taking into account the seal geometry and its mounting configuration, it was inferred that, with exception to very low pressure loads, at which the lip movement cannot be easily identified, the lip acted as a rigid-body rotating about a hinge, as schematised in Fig. 3.

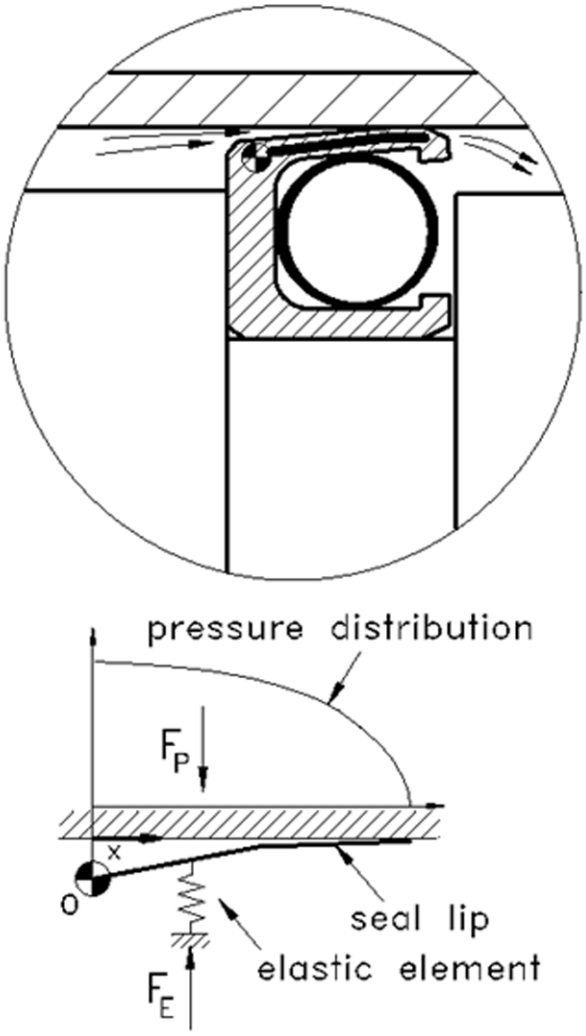

Figure 3: Spring-energised lip seal operation and rigid-body equivalent scheme: F_p is the "opening force", due to the pressure distribution over the seal lip; F_E is the "closing force" due to the spring elastic reaction

Setting the cylinder supply pressure at 0.6 MPa (standard supply pressure), a divergent tapered leakage path was generated and a flow-rate of about 10 l/min (ANR) was measured; (ANR) means standard reference conditions, i.e. a temperature T_0 = 293 K and an absolute pressure P_0 = 1 bar.

Table 1 permits to compare the measured leakage flow to reference values provided by ISO Standard 10099 and 19973-3.

Leakage comparison for a pneumatic cylinder having a bore diameter Φ = 50 mm		
ISO 10099 **Supply pressure 0.63 MPa** **Accepted value** **l/min (ANR)**	**ISO 19973-3** **Supply pressure 0.63 MPa** **Failure value** **l/min (ANR)**	**Spring-energized lip seal** **Supply pressure 0.6 MPa** **Measured leakage** **l/min (ANR)**
0.02	**0.2**	**10**

Table 1: Leakage comparison for pneumatic cylinders

It is clear that, even if the spring which the commercial lip seal is provided with has a high stiffness, the leakage path generated by the "opening force", due to the pressure distribution over the seal lip, permitted an unacceptable leakage flow. In fact, even if leakage is inherent the operation of an air-lubricated seal, so that a flow-rate higher than that permitted by the Standards could be accepted, its industrial application would require to keep it within a reasonable range.

Furthermore, it must be pointed out that the use of a mechanical spring makes the examined device very sensitive to the cylinder supply pressure.

On the basis of these preliminary experiments, some design requirements for an air-lubricated seal were defined:

- a lip acting like a rigid body should be provided to have an at least roughly prediction of the leakage path shape resulting from the application of a pressure load ;
- the leakage path should have a geometry able to minimize leakage; to this aim, convergent tapered walls or parallel walls should be preferred;
- a pneumatic spring, supplied at the same cylinder supply pressure, could be used instead of a mechanical spring; this way, a pressure self-balancing device could be obtained.

3.2 Identification of the leakage path shape and thickness

The commercial CFD software Ansys Fluent® was employed to numerically determine the mass flow-rate through gaps with various geometries representing possible leakage paths. In particular, a parametric study was performed both on tapered and truncated-tapered gaps with rigid boundaries.

With reference to Fig. 4, simulations were carried out on a two-dimensional CFD model of the flow field through the leakage path, evaluating the influence of the parameters L, h_1/h_2 and L_1/L. The sharp edge in the schematic view was replaced in the model by a filleted edge to take into account of the actual geometry.

The following assumptions were made:

- air is assumed to obey to ideal gas law;
- air viscosity μ is calculated as a function of absolute temperature T :

  $\mu = \mu_0 \cdot (T / T_0)^{2/3}$, where T_0 and μ_0 are respectively temperature and air viscosity under standard conditions (T_0 = 293 K; $\mu_0 = 1.79 \cdot 10^{-5}$ Pa ·s, according to ISO R554);
- upstream of the flow is assumed to have constant gauge pressure, equal to the cylinder supply pressure (p_s= 0.6 MPa);
- downstream of the flow is at atmospheric pressure;

- null heat flux was considered through the solid wall boundaries (adiabatic flow conditions);
- laminar flow conditions were investigated.

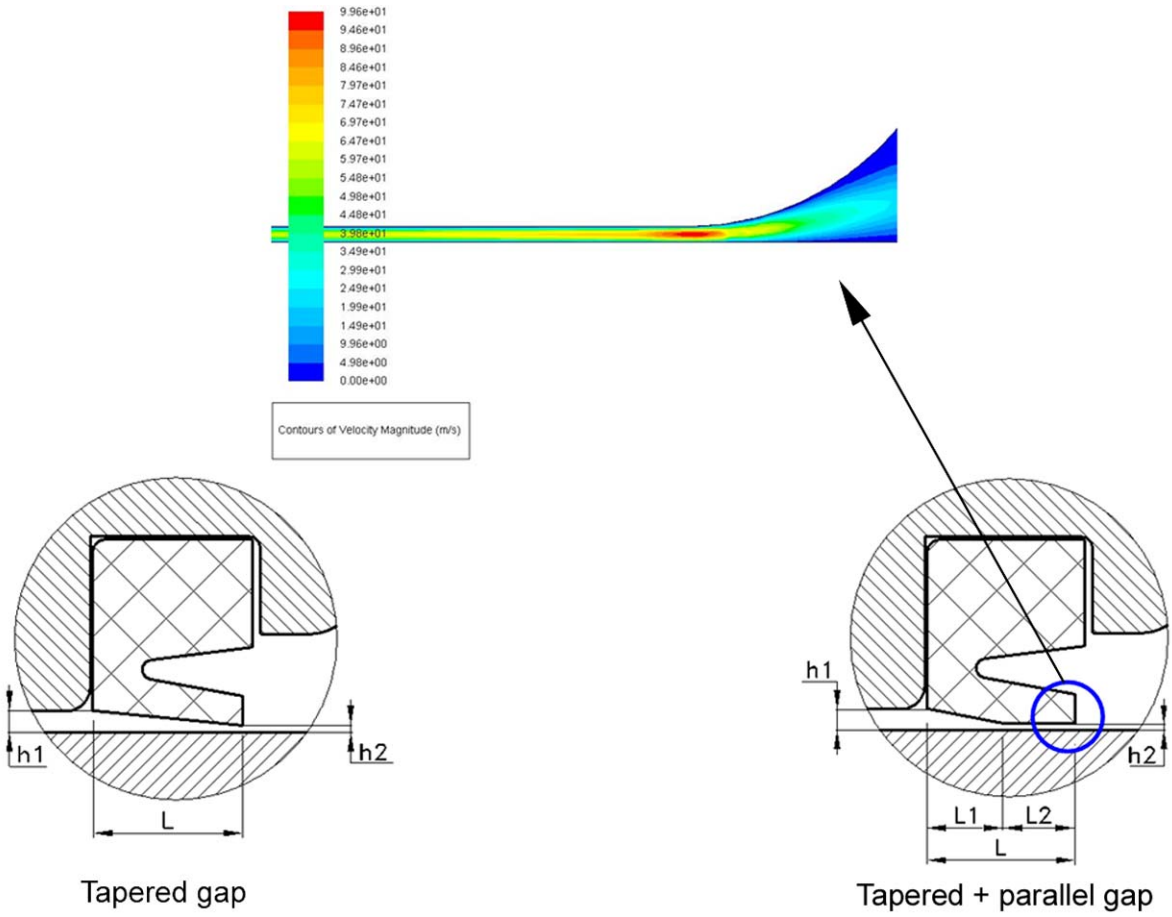

Figure 4: CFD model of the flow field through the leakage path

As an example of the obtained results, Fig. 5 shows pressure distribution along a 10 mm long tapered air gap, varying the ratio h_1/h_2. Results refer to a height h_2 of the gap exit section equal to 6 μm and to a supply gauge pressure equal to 0.6 MPa.

A length of 10 mm was considered as acceptable for a seal lip; in fact, thinking to a faced assembling of two air-lubricated seals, a longer lip would lead to excessive overall piston dimensions.

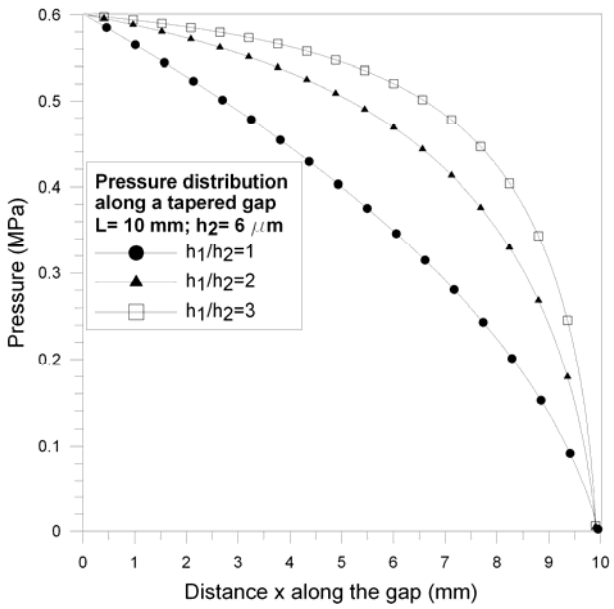

Figure 5: Pressure distribution along a tapered gap (L = 10 mm, h_2 = 6 μm) supplied at 0.6 MPa

As shown, taking constant the length L and reducing the ratio h_1/h_2, i.e. reducing the gap taper angle, the pressure drop is more uniformly distributed along the gap and the resultant force due to the pressure distribution, i.e. the "opening force", is located more closely to the gap inlet section. Table 2 shows that, in the same conditions, the leakage flow-rate is reduced. Flow-rate values were worked out referring to an annular leakage path having a cross-section equal to the simulated gap and a length equal to the circumference of a cylinder with a 50 mm bore diameter.

Tapered gap: L= 10 mm; h_2= 6 μm			
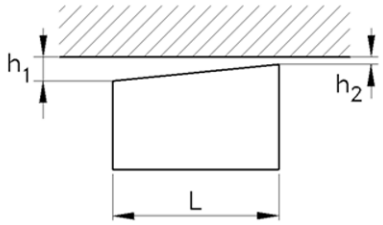			
	h_1/h_2 = 1	**h_1/h_2 = 2**	**h_1/h_2 = 3**
Q (l/min (ANR))	2.45	6.54	10.76

Table 2: Leakage flow-rate through a tapered gap, varying the ratio h_1/h_2

Fig. 6 shows pressure distribution along a 10 mm long tapered + parallel air gap, varying the ratio L_1/L. Results refer to a height h_2 of the gap exit section equal to 6 μm, a ratio h_1/h_2 equal to 2 and to a supply gauge pressure equal to 0.6 MPa.

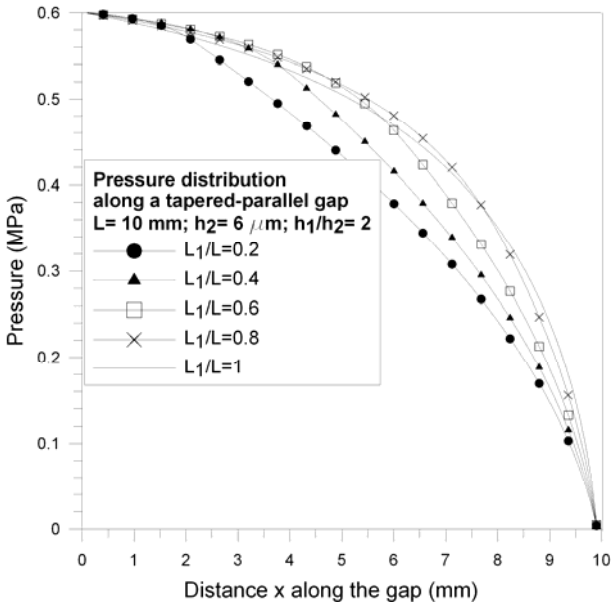

Figure 6: Pressure distribution along a tapered-parallel gap (L = 10 mm, h_2 = 6 μm) supplied at 0.6 MPa

As shown, taking constant the length L and the ratio h_1/h_2, but decreasing the ratio L_1/L, the pressure drop is more uniformly distributed along the gap and the resultant force due to pressure distribution, i.e. the "opening force", is located more closely to the gap inlet section. Table 3 shows that, in the specified conditions, the leakage flow-rate is reduced. As before, flow-rate values were worked out referring to a leakage path having the specified geometry and a length equal to the circumference of a cylinder with a 50 mm bore diameter.

Simulations results highlighted that a parallel or a slightly tapered gap should be provided between an air-lubricated seal and its counterpart to reduce leakage as much as possible. In particular, referring to a 10 mm long parallel gap and taking into account that flow-rate

depends on the cube of the gap height, the leakage in a cylinder with a 50 mm bore diameter supplied at 0.6 MPa could vary from 0.01 l/min (ANR) for a 1 μm high gap to 2.45 l/min (ANR) for a 6 μm high gap. As a consequence, an acceptable leakage flow could be obtained through a gap whose height exceeds the surface roughness.

Tapered + parallel gap: **L= 10 mm; h_2= 6 μm; h_1/h_2 = 2.**					
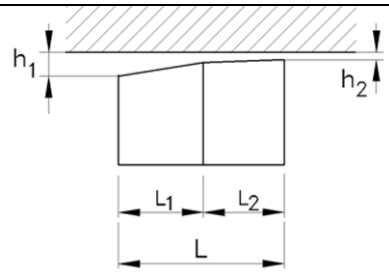					
	L_1/L = 0.2	**L_1/L = 0.4**	**L_1/L = 0.6**	**L_1/L = 0.8**	**L_1/L = 1**
Q (l/min (ANR))	2.85	3.32	3.96	4.99	6.54

Table 3: Leakage flow-rate through a tapered + parallel gap, varying the ratio L_1/L

4. DESIGN OF A REAL PART

On the basis of the previous remarks, an air-lubricated seal equipped with a pneumatic spring was designed. Fig.7 shows a prototype assembled on a testing piston. In order to promote lip deflection under loading, a PTFE seal (1), provided with a long lip and a weak part (2), which acts like a virtual hinge, was suitably designed and manufactured. A commercial NBR lip seal (3) coupled to seal (1) defines a closed chamber (4), which is always filled by air at the same pressure p_S used for the cylinder actuation thanks to a series of holes (5) made on the PTFE seal body; this way a pneumatic spring was obtained.

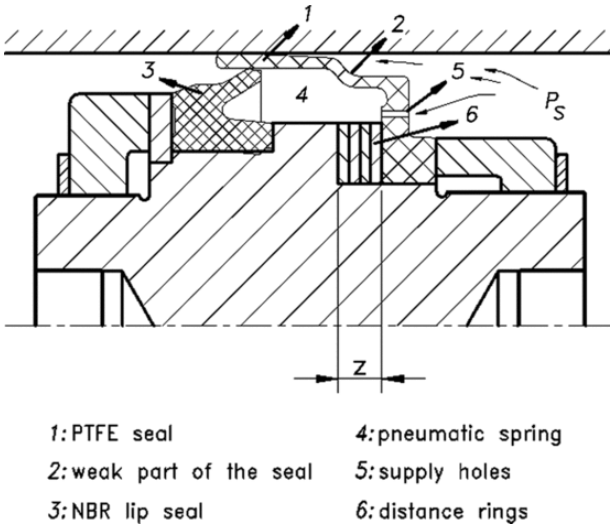

Figure 7: A prototype of air-lubricated seal equipped with a pneumatic spring

Providing supply pressure p_S, the "opening force" acting on the PTFE seal lip is balanced by the pneumatic spring force, by the elastic reaction due to the lip own stiffness and by the NBR seal contact force. The pneumatic spring self-tuning to the actuator supply pressure would make the PTFE seal lip position almost insensitive to the supply pressure itself; as a consequence, a leakage little depending both on supply pressure and on the barrel diameter machining tolerances could be expected.

The above described system is a one-directional device. In order to ensure a two-directional operation, two devices should be assembled on a hollow rod connected to the atmosphere, according to the scheme in Fig.1.

5. EXPERIMENTAL TESTS

The above described prototype of air-lubricated seal was assembled on a test piston. With reference to Fig.7, distance rings (6) were used to vary the PTFE seal and the NBR seal relative position; as a consequence, the air pressure active surface under the PTFE lip could be modified. Distance z, used in the following to compare different geometries, denotes the

distance rings thickness. The test piston was inserted in a commercial pneumatic cylinder, whose bore was replaced by a suitably manufactured calibrated barrel. In particular, tests were performed using three barrels having a 50.0, 50.1 and 50.2 mm internal diameter respectively and an internal surface roughness *Ra* of about 0.6 μm, to reproduce the manufacturing tolerances and the roughness of a commercial cylinder extruded barrel made up of aluminium. Aim of the measurements was to identify the device geometry able to minimise leakage and to highlight the influence of both bore tolerances and supply pressure on the leakage itself. The test set-up is shown in in Fig.8.

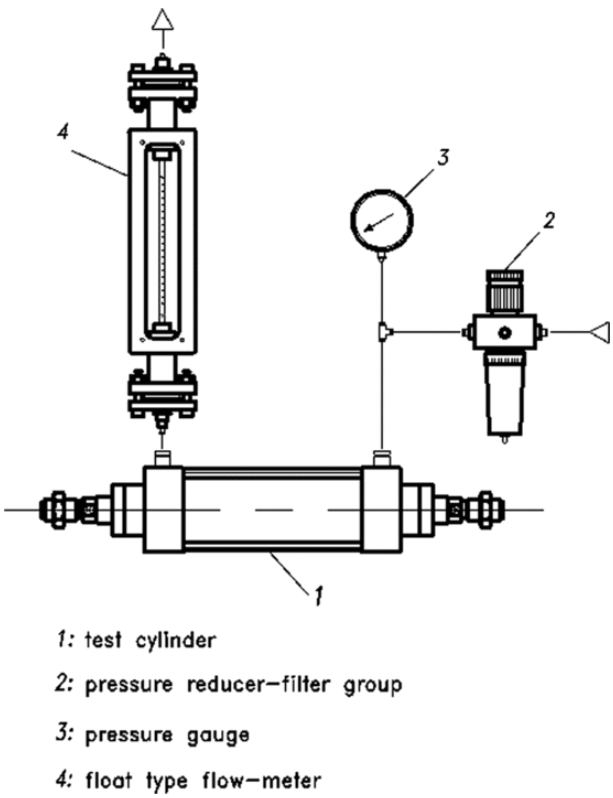

Figure 8: Leakage test set-up

Having mounted the air-lubricated seal on the test cylinder (1), equipped with a calibrated barrel, supply pressure was set by means of the pressure reducer-filter group (2) and monitored by the pressure gauge (3); leakage was measured by the float-type flow-meter (4). Tests were carried out varying the supply pressure from 0 to 0.6 MPa in increasing

increments; each measurement was repeated at least three times. Subsequently, a new calibrated barrel was assembled and tests were repeated.

Distance z was varied in a range from 4 to 6.7 mm.

Fig. 9 shows the maximum values of leakage obtained varying the distance z, for different cylinder bore diameters. It can be noted that increasing the cylinder bore diameter the leakage dependence on the sealing package geometry becomes more pronounced. This is due to the fact that in case of higher bore diameter the equivalent spring representing the lip own stiffness is less preloaded after mounting; as a consequence, applying the supply pressure p_S, the lip reaches a balancing configuration that determines a thicker gap between the lip itself and the cylinder bore. As expected, taking constant z and increasing the bore diameter, a nonlinear increase of leakage was obtained, since flow-rate depends on the cube of the gap height. Reducing z leakage increases because the lip elastic reaction becomes prevalent over the pneumatic spring reaction.

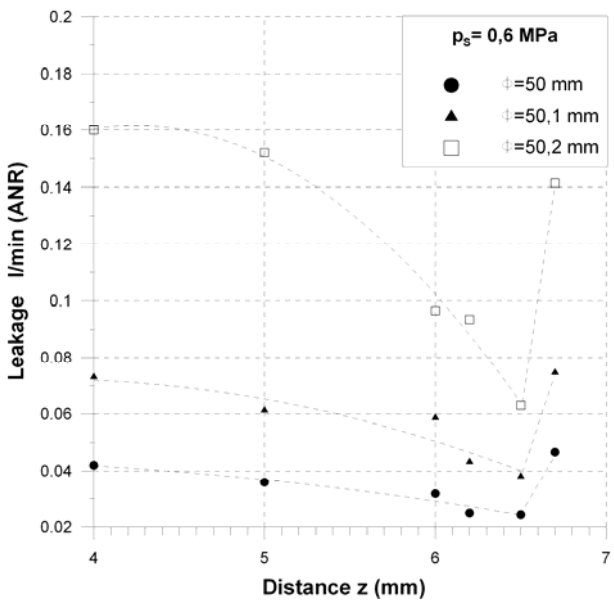

Fig.9: Leakage sensitivity to the distance z, varying the cylinder barrel diameter

Fig.10 and Fig. 11 show the measured flow-rate versus the cylinder supply pressure p_S, varying the calibrated barrel diameter, respectively for a distance z = 4 mm and a distance z = 6.5 mm.

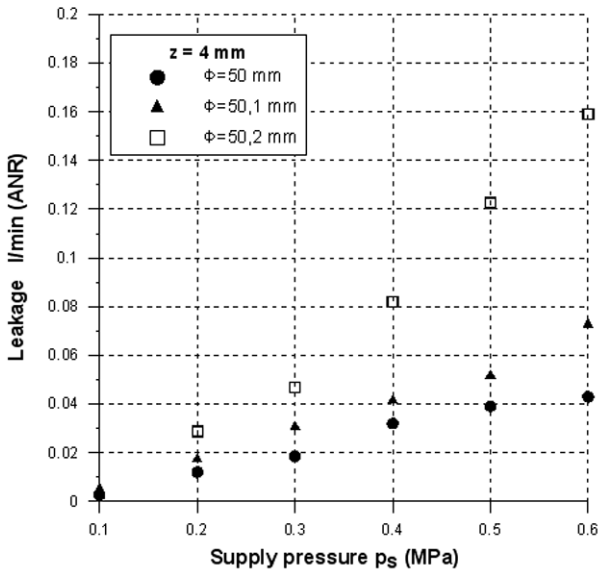

Figure 10: Leakage sensitivity to the cylinder supply pressure p_S, varying the cylinder barrel diameter; z = 4 mm

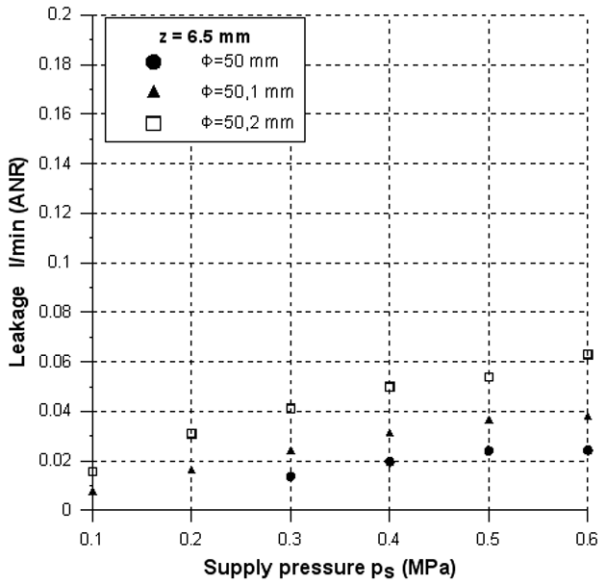

Figure 11: Leakage sensitivity to the cylinder supply pressure p_S, varying the cylinder barrel diameter; z = 6.5 mm

The two graphs comparison highlights that, increasing the distance *z* between the PTFE seal and the NBR seal, i.e. increasing the pneumatic spring active surface, the leakage sensitivity to the cylinder supply pressure is reduced. The effectiveness of a pneumatic spring self-tuning on the cylinder supply pressure is therefore confirmed.

In order to further analyse the system behaviour, tests were also carried out closing up the holes manufactured over the PTFE seal body, so as to disable the pneumatic spring. As an example of the obtained results, Fig. 12 compares leakage values versus the cylinder supply pressure p_S, providing or not the system with the pneumatic spring; results were obtained setting a distance z = 6.5 mm and assembling the sealing package inside a cylinder barrel with an internal diameter ∅ = 50.2 mm (worst case).

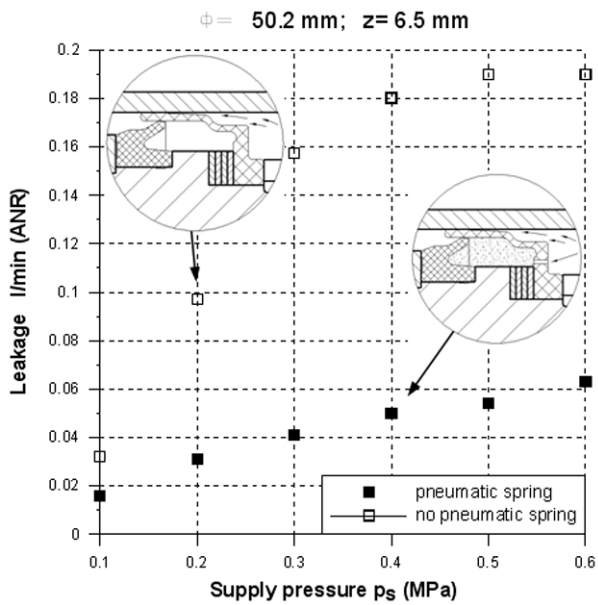

Figure 12: Effect of the self-tuning pneumatic spring on leakage, varying the system geometry

As shown, providing the system with a pneumatic spring, leakage is considerably reduced. If the pneumatic spring is disabled, increasing the supply pressure the leakage curve tends to

flatten; this could be explained thinking to a loss of contact of the NBR seal lip from the PTFE seal lip caused by the counter-pressure in the exhausting cylinder chamber.

Tests were also carried out assembling only the PTFE seal inside the cylinder, to remove both the pneumatic spring and the NBR seal. In this case, very high leakage values were measured; for example, a flow-rate of 0.505 l/min (ANR) was measured at 0.1 MPa. This highlights the importance of the NBR seal contact force on the PTFE seal lip balance configuration.

6. RESULTS ANALYSIS AND COMMENTS

The experimental tests, in particular those shown in Fig. 12, pointed out that the use of a pneumatic spring self-tuning on the cylinder supply pressure is critical for the correct operation of an air-lubricated seal. In fact, only if such a pneumatic spring is provided to the sealing system the air gap thickness can be limited and, consequently, leakage can be controlled. Disabling the pneumatic spring, leakage highly increases until reaching values significantly higher than those accepted by the Standards; in this case, an industrial application of the system would be prevented.

Results shown in Fig. 9 highlighted the importance of increasing the pneumatic spring active surface. A best geometry configuration was identified, corresponding to a distance z = 6.5 mm: lower values of z reduce the pneumatic spring active surface, limiting its reaction force; a further increase of z causes a wrong assembling of the sealing package because the NBR seal lip tends to lose its contact with the PTFE seal lip. It must be pointed out that a distance z lower that 4 mm represents another limit of the system geometry; in fact, in this case the NBR seal should press the PTFE seal lip too much against the cylinder bore, preventing the system from acting like an air-lubricated seal.

The influence of the cylinder supply pressure on the sealing system behaviour was also investigated. Results shown in Fig. 10 and Fig. 11 highlighted that, correctly assembling the sealing package (z= 6.5 mm), a little dependence on the supply pressure can be obtained.

The influence of the cylinder barrel diameter, i.e. the influence of the machining tolerances of commercial aluminum barrels, was also evaluated. It was found that, increasing the barrel diameter, leakage increases and becomes more sensitive both to the cylinder supply pressure and to the assembling distance z.

7. CONCLUSIONS

A methodology to design an air-lubricated seal for pneumatic cylinders is presented. This unconventional kind of sealing system intends to reduce friction forces and wear by interposing a thin air flow between itself and the sliding counterpart, reducing or avoiding at all the use of lubricant grease. Since leakage is inherent the operation of such a system, this seal must not be intended as a common sealing device, but as a sort of leakage-controlling device. A preliminary study, also supported by numerical simulations, permitted to identify the main design requirements and a prototype was manufactured. In order to generate a controlled gap between the sealing system and the cylinder bore to reduce leakage as much as possible, the sealing system was provided by a long lip and by a pneumatic spring self-tuning to the actuator supply pressure. Experimental tests showed that the developed system is little sensitive to the actuator supply pressure and to the bore manufacturing tolerances, because the seal lip becomes self-adaptable and tends to maintain constant the air gap thickness during operation. In addition, the use of an air-lubricated seal would make easier the assembly process of the seal package and of the whole of the cylinder; in fact, the use of a seal lip more rigid than that of a common seal, would avoid the seal lip rolling or its tearing up.

ACKNOWLEDGEMENTS

The authors are grateful to all the Partners of the Kristal project and the European Commission for their support in the collaborative project "Knowledge-based Radical Innovation Surfacing for Tribology and Advanced Lubrication" (EU Project Reference NMP3-CT-2005-515837).

References

[1] Zhuk Yuri N. Use of hard metal coatings to extend the life of elastomeric seals. Sealing Technology 2012; 10: 8-11.

[2] Martínez L.; Nevshupa R., Álvarez L., Huttel Y., Méndez J., Román E., Mozas E., Valdés J.R., Jimenez M.A., Gachon Y., Heau C., Faverjon F. Application of diamond-like carbon coatings to elastomers frictional surfaces. Tribology International 2009;42(4): 584-590.

[3] Pei Y.T, Bui X.L , Zhou X.B, De Hosson J.Th.M. Tribological behavior of W-DLC coated rubber seals. Surface & Coatings Technology 2008; 202: 1869–1875.

[4] Verheyde B., Rombouts M., Vanhulsel A., Havermans D., Meneve J., Wangenheim M. Influence of surface treatment of elastomers on their frictional behaviour in sliding contact. Wear 2009; 266 (3-4): 468-475.

[5] Shinkarenko A., Kligerman Y., Etsion I. The effect of elastomer surface texturing in soft elasto-hydrodynamic lubrication. Tribology Letters 2009; 36 (2): 95-103.

[6] Kligerman Y., Shinkarenko A. The effect of tapered edges on lubrication regimes in surface-textured elastomer seals. Tribology International 2011; 44 (12): 2059-2066.

[7] Felhös D., Karger-Kocsis J. Tribological testing of peroxide-cured EPDM rubbers with different carbon black contents under dry sliding conditions against steel. Tribology International 2008; 41: 404–415.

[8] Karger-Kocsis J, Mousa A, Major Z, Békési N. Dry friction and sliding wear of EPDM rubbers against steel as a function of carbon black content. Wear 2008; 264: 359–367.

[9] Conte M., Igartua A. Study of PTFE composites tribological behaviour. Wear 2012; 296: 568-574.

[10] Belforte G, Manuello A, Mazza L. Optimization of the cross section of an elastomeric seal for pneumatic cylinders. Journal of Tribology 2006; 128 (2): 406-413.

[11] Belforte G., Conte M., Manuello A., Mazza L. Performance and behaviour of seals for pneumatic spool valves. Tribology Transactions 2011; 54 (2): 237-246.

[12] Belforte G, Mazza L, Raparelli T, Trivella A. Analysis, design and comparison of different types of pistons for sealless pneumatic cylinders and valves. Tribology Transactions 2005; 48 (3): 377-388.

[13] Visconte C., Conte M., Mattone M.C. Analysis of the leakage path in an air-lubricated seal. Tribology International 2009; 42: 844-848.