# Three port network analyzer: an original implementation with a simplified calibration procedure

# Three-Port Network Analyser: An Original Implementation with a Simplified Calibration Procedure

A. Ferrero and U. Pisani
*Dipartimento di Elettronica, Politecnico di Torino*
*Corso Duca degli Abruzzi 24, I-10129 Torino, ITALY*

## ABSTRACT

A particular calibration procedure for three port network analyzer is presented. The adopted matrix solution allows to perform the whole calibration with ordinary standards used for two port applications and minimizes the number of their connections.

A three-port network analyzer, implemented using commercial available hardware is also presented and used to verify the calibration algorithm.

Experimental verification was carried out through measurement of a directional coupler and several devices with one and two ports.

## INTRODUCTION

To measure 3-port devices several alternative approaches, based on conventional two-port measurement systems were proposed.

Those techniques require three full two-port measurements to obtain the 3-port device parameters. During these two-port measurements the third device port should be terminated with perfectly matched load. Since this requirement cannot be met in practice with sufficient accuracy, mismatch errors are induced.

An exact solution was proposed [1] in order to solve this practical problem, based on a S-parameter normalization and renormalization by means of matrix transformations, to different sets of port impedances.

A computer iterative solution was presented in [2] by assuming the knowledge of the imperfect termination. Another recent approach [3] tries to overcome the mismatch problem by using time domain techniques.

Other algorithm were based on a more general custom multiport NWA but required unavailable 3-port standards to perform the calibration [4, 5].

In this paper a new calibration technique developed for a 3-port S-parameter test system, implemented with ordinary commercial instrumentation is presented.

The calibration follows the more general one introduced by the authors in [8].

According to this new algorithm, complete calibration of the 3-port NWA requires measurement of three arbitrary one-port standards connected at one NWA port, and only two measurements of a known two-port standard, such as a "thru", connected in turn between the previously selected port and the other 2 ports. So that our procedure requires only conventional standards, used for two-port applications, and minimizes the number of their connections.

Experimental results were carried out through measurements of one, two and three port devices connected to the test set ports in several different ways. Good agreement of the same corrected S parameter measured at different test set ports was observed.

## TEST SET DESCRIPTION

The system block diagram, shown in figure 1, consists of a vector network analyzer, a pair of four channel frequency converters, microwave switches and directional couplers.

In order to allow ratioed measurements between voltage waves sampled by two different frequency converters, one channel in each frequency converter is used as a reference channel for NWA phase locking. An IF switch built into one of the two test sets provides the proper signals to the IF converter for the further downconversion and digital signal processing.



0-7803-0549-3/92 $3.00 © 1992 IEEE

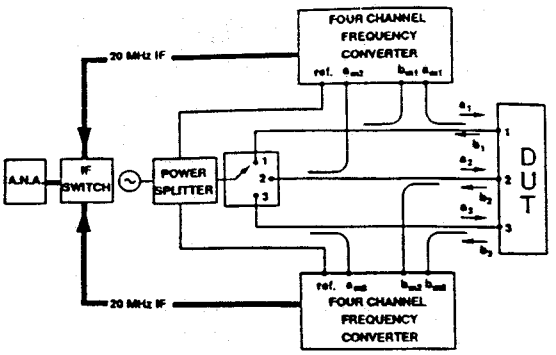


Figure 1: Block diagram of the 3-port implemented S-parameter test set.

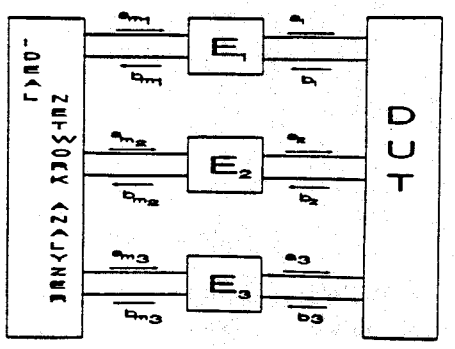


Figure 2: Three port error-box model

## CALIBRATION TECHNIQUE

Let the raw pseudo-scattering matrix $\mathbf{S_m}$ be defined by:

$$\mathbf{b_m} = \mathbf{S_m}\mathbf{a_m} \tag{1}$$

where $\mathbf{a_m}$ and $\mathbf{b_m}$ are the unratioed readings vectors:

$$\mathbf{a_m} = \begin{bmatrix} a_{m1} \\ a_{m2} \\ a_{m3} \end{bmatrix} \tag{2}$$

$$\mathbf{b_m} = \begin{bmatrix} b_{m1} \\ b_{m2} \\ b_{m3} \end{bmatrix} \tag{3}$$

By a proper procedure outlined in [8], $\mathbf{S_m}$ can be acquired from the multiple readings $a_{mj}$, $b_{mj}$ of the VNA when the source is applied in turn at the different ports.

The relationship between the raw $\mathbf{S_m}$ and the S matrices of the device is obtained by introducing three error boxes interfacing an ideal NWA which measures $\mathbf{S_m}$ with the DUT reference planes as shown in figure 2.

Each error box is defined by the following pseudo-scattering matrix $\mathbf{E}_i$, where $i = 1, \ldots, 3$:

$$\mathbf{E}_i = \begin{bmatrix} e_i^{00} & e_i^{01} \\ e_i^{10} & e_i^{11} \end{bmatrix} \tag{4}$$

The error box concept is so extended to a 3-port measuring system, where the error coefficients become the elements of four diagonal matrices $\mathbf{\Gamma}_{ij}$ (i=0,1;j=0,1)

$$\mathbf{\Gamma}_{ij} = \begin{bmatrix} e_1^{ij} & 0 & 0 \\ 0 & e_2^{ij} & 0 \\ 0 & 0 & e_3^{ij} \end{bmatrix} \tag{5}$$

After some matrix manipulation it results:

$$\mathbf{S_m} = \mathbf{\Gamma}_{00} + \mathbf{\Gamma}_{01}\left[\mathbf{I} - \mathbf{S}\mathbf{\Gamma}_{11}\right]^{-1}\mathbf{S}\mathbf{\Gamma}_{10} \tag{6}$$

where $\mathbf{I}$ is the 3-dimensional unitary matrix and $\mathbf{S}$ is the scattering matrix of the 3-port DUT. Rearranging equation (6) we obtain:

$$\mathbf{S} = \mathbf{A}(\mathbf{I} + \mathbf{\Gamma}_{11}\mathbf{A})^{-1} \tag{7}$$

where

$$\mathbf{A} = \begin{bmatrix} \frac{(S_{m11} - e_1^{00})}{t_{11}} & \frac{S_{m12}}{t_{12}} & \frac{S_{m13}}{t_{13}} \\ \frac{S_{m21}}{t_{21}} & \frac{(S_{m22} - e_2^{00})}{t_{22}} & \frac{S_{m23}}{t_{23}} \\ \frac{S_{m31}}{t_{31}} & \frac{S_{m32}}{t_{32}} & \frac{(S_{m33} - e_3^{00})}{t_{33}} \end{bmatrix}$$

and

$$t_{ij} = e_i^{01} e_j^{10} \tag{8}$$

The error coefficients $t_{ij}$ and $e_i^{00}$ of the matrix $\mathbf{A}$ and the elements $e_i^{11}$ (for $i, j = 1, \ldots, 3$) of the $\mathbf{\Gamma}_{11}$ matrix are derived by means of a calibration technique which follows a repetitive experimental procedure based on the extension of the QSOLT calibration technique [6], [7].

The calibration steps are as follows:

1. At port 1 an usual one-port calibration is performed using three known standards; acquire the corresponding values of $b_{m1}/a_{m1}$ and compute the three error coefficients $e_1^{00}$, $e_1^{11}$ and $t_{11}$ [9].

2. A repetitive procedure is then carried out for the other 2 ports by connecting in turn a known two port network between port 1 and 2 and port 1 and 3.

   Let

$$\mathbf{X}_1 = \begin{bmatrix} -\frac{\Delta}{t_{11}} & \frac{e_1^{00}}{t_{11}} \\ -\frac{e_1^{11}}{t_{11}} & \frac{1}{t_{11}} \end{bmatrix} \tag{9}$$

$$\mathbf{X}_2 = \begin{bmatrix} \frac{e_1^{00}}{t_{12}} & -\frac{e_1^{11}}{t_{12}} \\ \frac{1}{t_{12}} & -\frac{\Delta}{t_{12}} \end{bmatrix} \tag{10}$$

   and

$$\mathbf{X}_3 = \begin{bmatrix} \frac{e_1^{00}}{t_{13}} & -\frac{e_1^{11}}{t_{13}} \\ \frac{1}{t_{13}} & -\frac{\Delta}{t_{13}} \end{bmatrix} \tag{11}$$

   the measured quantities at each port are linked with actual ones by means of the following relationships:

$$\begin{bmatrix} b_{m1} \\ a_{m1} \end{bmatrix} = e_1^{01}\mathbf{X}_1 \begin{bmatrix} b_1 \\ a_1 \end{bmatrix} \tag{12}$$

$$\begin{bmatrix} a_{m2} \\ b_{m2} \end{bmatrix} = e_1^{01}\mathbf{X}_2 \begin{bmatrix} a_2 \\ b_2 \end{bmatrix} \tag{13}$$

$$\begin{bmatrix} a_{m3} \\ b_{m3} \end{bmatrix} = e_1^{01}\mathbf{X}_3 \begin{bmatrix} a_3 \\ b_3 \end{bmatrix} \tag{14}$$

   From 12, 13 and 14 it is straightforward to obtain ($k = 2,3$)

$$\mathbf{T}_{mk} = \mathbf{X}_1\mathbf{T}_{st}\mathbf{X}_k^{-1} \tag{15}$$

   where $\mathbf{T}_{mk}$ is the trasmission matrix obtained from the four related elements of $\mathbf{S}_m$ as:

$$\mathbf{T}_{mk} = \begin{bmatrix} \frac{-\det \mathbf{S}_m^{T1k}}{S_{mk1}^{T1k}} & \frac{S_{m11}^{T1k}}{S_{mk1}^{T1k}} \\ -\frac{S_{mkk}^{T1k}}{S_{mk1}^{T1k}} & \frac{1}{S_{mk1}^{T1k}} \end{bmatrix} \tag{16}$$

   while $\mathbf{T}_{st}$ is the known two port standard trasmission matrix.

   From equation (15) it follows that:

$$\mathbf{X}_k = \mathbf{T}_{mk}^{-1}\mathbf{X}_1\mathbf{T}_{st} \tag{17}$$

   Ten error coefficients are so obtained ($k = 2,3$):

$$\begin{cases} e_k^{00} = \frac{X_k^{21}}{X_k^{11}} \\ e_k^{11} = -\frac{X_k^{12}}{X_k^{11}} \\ t_{kk} = \frac{\det \mathbf{X}_k}{(X_k^{11})^2} \\ t_{1k} = \frac{1}{X_k^{11}} \\ t_{k1} = t_{11}\frac{\det \mathbf{X}_k}{X_k^{11}} \end{cases} \tag{18}$$

3. The remain error coefficients are $t_{32}$ and $t_{23}$. To carry out these error coefficients no additional standard is needed since:

$$t_{23} = e_2^{01}e_3^{10} = \frac{t_{21}t_{13}}{t_{11}} \tag{19}$$

$$t_{32} = e_3^{01}e_2^{10} = \frac{t_{31}t_{12}}{t_{11}} \tag{20}$$

The two "thru" connections required are the minimum necessary to uniquely obtain all the error coefficients. Can be proven that the three error boxes give 11 independent unknowns as the number of the independent measurements provided by this calibration procedure.

## EXPERIMENTAL RESULTS

Several tests were carried out by measuring passive components with one, two and three ports.

A coaxial 3.5 mm sliding load procedure and two offset short standards were used to calibrate port 1 from 3 to 18 GHz. A broadband 50 ohm

load was then measured on ports 2 and 3 while the unused ports were left open.

The results reported in figure 3, are in very good agreement, and prove that all the NWA test ports are able to measure well matched loads (−40 dB) with the same accuracy.

Some results obtained for a directional coupler connected as shown in figure 4 are presented. In figure 5 the direct and reverse coupling factors $S_{21}$ and $S_{12}$ were compared each other to check the device reciprocity while figure 6 shows the input mismatch at all the ports.

## CONCLUSION

The paper presents a simple and fast calibration procedure for a three port NWA based on commercial two port standard. Exprimental results testify its effectiveness.

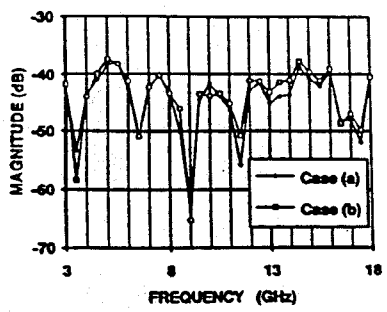


Figure 3: Magnitude of a standard matched load reflection coefficient measured at port 2 (case a) and at port 3 (case b)

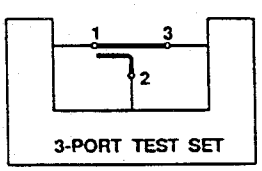


Figure 4: Port connections used for directional coupler measurements

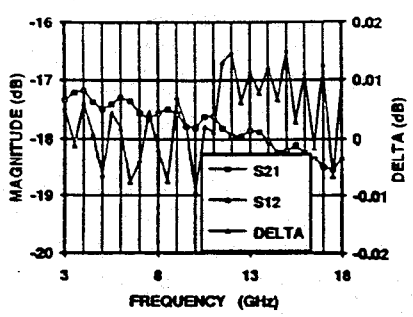


Figure 5: Directional coupler $S_{21}$ and $S_{12}$ magnitude and their difference DELTA

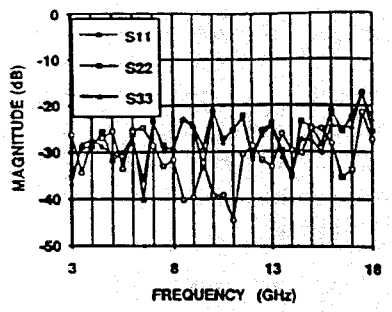


Figure 6: Directional coupler $S_{ii}$ magnitude

## ACKNOWLEDGMENTS

The authors wish to thank K.J. Kerwin of Hewlett Packard Microwave Technology Division for the useful discussion and support in developing this work.

## References

[1] J.C,Tippet, R.A.Speciale, *A Rigorous Technique for Measuring the Scattering Matrix of a Multiport Device with a 2-Port Network Analyzer*, IEEE Trans. on Microwave Theory and Techniques, Vol. MTT-30, N.5, May 1982, pp. 661-665.

[2] J.C. Rautio, *Techniques for correcting Scattering Parameter Data of an Imperfectly Terminated Multiport when measured with a Two-port Network Analyzer* ,IEEE Trans. Microwave Theory Tech., Vol. MTT-31, N.5, May 1983, pp. 407-415.

[3] L. Selmi, D.B. Estreich, *An Accurate system for automated on-wafer characterization of three-port devices*, IEEE GaAs IC Symposium digest, 1990,pp.343-346

[4] R.A. Speciale, "Multiport Network Analyzers: Meeting the Design Need," *MSN*, June 1980, pp. 67-89.

[5] R.A. Speciale, N.R. Franzen, "Super-TSD: A Generalization of the TSD network analyzer calibration procedure, covering n-port measurements with leakage," in *1977 IEEE G-MTT Int. Symp. Dig.*, San Diego, Ca., June 21-23, 1977, pp. 114-117.

[6] A. Ferrero, U. Pisani, "QSOLT: a new fast calibration algorithm for two port S-parameter measurements," in *38th ARFTG Conf. Dig.*, San Diego, Ca. December 5-6, 1991.

[7] H.J. Eul and B. Schiek , "Reducing the Number of Calibration Standards for Network Analyzer Calibration," *IEEE Trans. Instrum. Meas.*, Vol. 40, N.4, August 1991, pp. 732-735.

[8] A. Ferrero, U. Pisani, K. J. Kerwin, *A new implementation of a multiport automatic newtwork analyzer*, accepted for pubblication on IEEE Trans. on Microwave Theory and Techniques

[9] J. Fitzpatrick, *Error models for Systems Measurement*, Microwave Journal, May, 1978, pp. 63-66.