POLITECNICO DI TORINO
Repository ISTITUZIONALE

Vehicle with tilting suspension system

Original
Vehicle with tilting suspension system / Tonoli, A., Festini, A., Cavalli, F., Carabelli, S., Fariello, M.. - (2006).

Availability:
This version is available at: 11583/2497482 since:

Publisher:

Published
DOI:

Terms of use:

This article is made available under terms and conditions as specified in the corresponding bibliographic description in the repository

Publisher copyright

(Article begins on next page)

28 November 2026

(19) Europäisches Patentamt
European Patent Office
Office européen des brevets

(11) EP 1 798 081 A1

(12) EUROPEAN PATENT APPLICATION

(43) Date of publication:
20.06.2007 Bulletin 2007/25

(51) Int Cl.:
B60G 17/015 *(2006.01)* ***B60G 21/00*** *(2006.01)*

(21) Application number: **06026082.5**

(22) Date of filing: **15.12.2006**

(84) Designated Contracting States:
AT BE BG CH CY CZ DE DK EE ES FI FR GB GR HU IE IS IT LI LT LU LV MC NL PL PT RO SE SI SK TR
Designated Extension States:
AL BA HR MK YU

(30) Priority: **16.12.2005 EP 05027656**

(71) Applicant: **Fondazione Torino Wireless**
10129 Torino (IT)

(72) Inventors:
- **Tonoli, Andrea**
  10051 Avigliana (Torino) (IT)
- **Festini, Andrea**
  10093 Collegno (Torino) (IT)
- **Cavalli, Fabio**
  15100 Allessandria (IT)
- **Carabelli, Stefano**
  10054 Cesana Torinese (Torino) (IT)
- **Fariello, Massimo**
  10100 Torino (IT)

(74) Representative: **Grünecker, Kinkeldey,**
Stockmair & Schwanhäusser
Anwaltssozietät
Maximilianstrasse 58
80538 München (DE)

(54) Vehicle with tilting suspension system

(57) A tilting suspension system is provided for two supporting elements of a vehicle with said module comprising a rigid frame adapted to be firmly fixed to the chassis of the vehicle so as to be tilted together with the whole vehicle. The tilting of the rigid frame is obtained as a result of the counter torque arising when activating actuating means firmly fixed to the rigid frame, with said tilting means being pivotable connected to shock absorbers 18. The tilting module further comprises suspension arms usually connected to the rigid frame, with said suspension arms supporting, in cooperation with supporting uprights, the two supporting elements thus allowing both tilting and steering of said two supporting elements. Moreover, the supporting elements can be wheels and electric motors may be received in the hubs of the wheels, thus allowing the realization of driving, steering and tilting module adapted to be used either in hybrid vehicles or electrically driven vehicles.

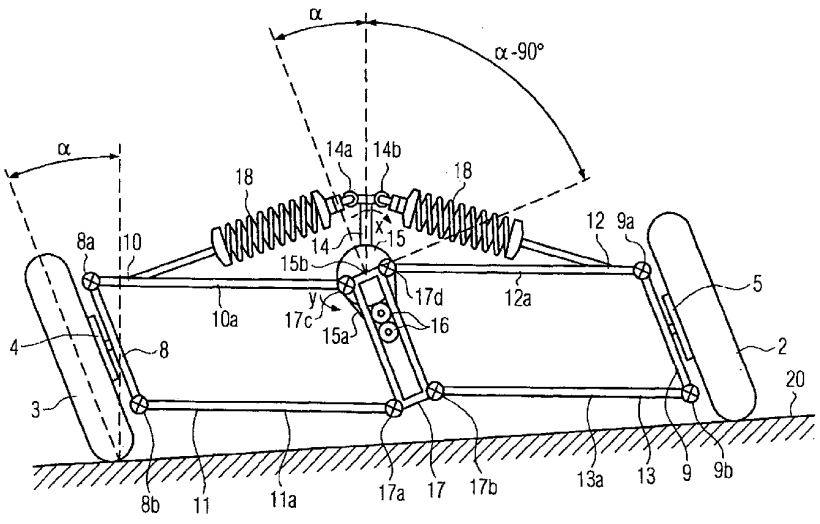

FIG. 4a

EP 1 798 081 A1

Description

FIELD OF THE PRESENT INVENTION

[0001] The present invention relates to the field of automotive applications. In particular, the present invention relates to a suspension tilting module for vehicles and a vehicle equipped with such a suspension tilting module. In more detail, the present invention relates to a suspension tilting module allowing at least two wheels or other supporting elements of a vehicle to be tilted together with the whole body of the vehicle. Still in more detail, the present invention relates to a suspension tilting module allowing both steering and tilting of said two wheels or other supporting elements. Furthermore, the present invention relates to a suspension tilting module wherein driving motors can be received in the hubs of two wheels disposed on a common axle, so as to realize the active control of the torque on the wheels of the same axle, for example by increasing the torque on one wheel and decreasing the torque on the other wheel.

[0002] Moreover, the present invention relates to the field of snow vehicles, such as snowmobiles.

DESCRIPTION OF THE PRIOR ART

[0003] Over the past few years, an interest has grown towards a vehicle with innovative configurations due to the increasing number of vehicles and the related problems of traffic congestion and pollution. Such vehicles are usually of small dimensions of weight and size to minimize the parking problems and reduce the losses due to the rolling resistance and aerodynamic drag. In particular, the size of these vehicles is normally designed for one or two people, thus allowing personal mobility; moreover, the small size and weight of these vehicles allows for the reduction of the engine power and accordingly, the emissions without compromising the performance. In particular, over the past years, many efforts have been devoted by the car manufacturers for the development of so-called tilting vehicles, namely of vehicles wherein all or part of the vehicle is inclined inward during cornering so that the resultant of the gravity and the centrifugal forces is kept oriented along the vertical body axis of the vehicle. Accordingly, rollover can be avoided even if the track of the tilting vehicle is narrow with respect to that of conventional vehicles.

[0004] Several tilting vehicle have been proposed in the past with three or more wheels. In some three wheeled vehicles, the tilting is given just to the body and the central wheel while the axis with dual wheels does not tilt. On the contrary, in other cases, the solution is preferred according to which all wheels tilt with the body, since this solution allows to obtain improved performances concerning the dynamic of the vehicle.

[0005] However, in spite of all the advantages offered by tilting vehicles, the further development of these vehicles has revealed that several problems have still to be solved and/or overcome. For instance, it has been revealed to be very difficult to obtain good tilting performances in the case of driving wheels, i.e. in the case of wheels exploiting the traction function; in fact, in the case of driving wheels the tilting angle obtained with the known tilting solutions is rather limited (in the range of 35°) whilst only tilting angles in the range of 45° rarely allow to overcome the rollover problem. For this reason, up to now, tilting solutions have been proposed essentially for three cycles, wherein the mechanical transmission is connected to a central wheel (as in the case of a motor bike) while the other two wheels are tilting but they do not exploit the driving function. To overcome this limitation, solutions have been proposed according to which a differential gear is installed on a frame that can rotate with respect to the body of the vehicle; this allows tipping the misalignment of the ball joints to acceptable limits even with large tilting angles of the vehicle body. However, the resulting configuration is very complex and may be affected by low efficiency and reliability, high vibration levels and heavy weight.

[0006] Further problems affecting the known tilting solutions relates to the fact that these solutions have revealed to be unsatisfactory when applied to steering wheels; in particular, in the known solutions, either the steering angle or the tilting angle is very limited whilst no solutions are known allowing good performance concerning both the steering and the tilting function. In particular, this is due to the fact that standard ball joints of the kind used for cars suspensions cannot be used when high titling angles have to be obtained. In fact, spherical joints for automotive applicants are designed to allow free rotation about the steering axis but the tilting angles allowed by spherical joints are limited to less than 40°. However, these titling angles are not adequate for high tilting suspension systems when rotation angles in the range of 100° are needed.

[0007] Also in the field of snow vehicles, as snowmobile a number of inventions have been presented in the last years in order to improve the stability, as well as the drive feeling and the comfort of these vehicles.

[0008] The patent US 6942050 B1 relates to a front suspension system for snowmobiles. It discloses a suspension system with a double wishbone configuration. Investigations have been made on the position of the damper, arms and shock absorber to improve the driving feeling of the snowmobile. The proposed module is not tilting: the shock absorbers are rigidly linked to the frame of the vehicle and these linking points remain fixed when the wishbones move.

[0009] The patent US 6467787 B1 discloses a mobile steering mechanism to improve the drive feeling during cornering. The steer mechanism allows the driver to more easily move his body sideways and then more easily control the steering from this position. This mechanism improves the drive feeling during cornering, but the driver must move his body sideways and this effort can be considerable. The vehicle is not tilting.

[0010] The patent application WO 2006/000841 A1 discloses a suspension tilting module, which is characterized by a geometry with longitudinal arms. With respect to a double wishbone configuration this solution is characterized by an increased complexity that gives way to some weight, cost, and reliability issues . Additionally, the longitudinal arms couple the vertical displacements to the longitudinal forces acting on the skis such that a variation of the longitudinal forces may produce a vertical displacement of the vehicle body. In fact, the tilting functionality is obtained by a configuration that includes many elements such as cardan joints and pendulum arms. Moreover the proposed solution allows to change the distance between the skis. If used with narrow skis, the vehicle can be difficult to drive due to the possibility of lateral instability, especially at low speed or when driving on hard or icy tracks. Another problem that can be introduced by this solution consists in the vertical displacements of the snowmobile frame induced by the friction and all longitudinal forces on the skis. Due to the suspension geometry, the longitudinal forces are equilibrated by forces along the suspension rods. These forces are not horizontal and their vertical component may induce a vertical motion of the frame of the snowmobile. This is an additional cause of instability of the snowmobile.

[0011] Accordingly, in view of the problems and/or drawbacks identified above, it is an object of the present invention to provide a suspension tilting module allowing to overcome the drawbacks affecting the prior art titling solutions. Moreover, it is an object of the present invention to provide a suspension tilting module for a wheel vehicle adapted to be implemented in the case of driving wheels namely in the case of wheels exploiting the driving and/or traction function but still allowing high tilting angles in particular, tilting angles of more than 45° on each side of the vehicle. A further object of the present invention is that of providing a suspension tilting module allowing to be implemented in the case of steering wheels, namely in the case of wheels exploiting both the driving and tilting function but still allowing high steering and tilting angles. Another object of the present invention is that of providing a suspension tilting module of reduced complexities, dimensions and weight. A further object of the present invention is that of providing a suspension tilting module adapted to be implemented not only in the case of three-wheeled vehicles, but in any kind of vehicle comprising at least two wheels disposed on a common axle. Still a further object of the present invention is that of providing a suspension tilting module allowing driving means to be installed in the hubs of the wheels so as to realize an all-wheel drive configuration. Still a further object of the present invention is that of providing a suspension tilting module in which driving means exploiting the driving and traction function may be installed on each tilting wheel thus allowing to control the torque generated by each driving means so as to obtain an improved traction control on each wheel.

SUMMARY OF THE PRESENT INVENTION

[0012] To this end, according to the present invention, this is obtained by providing a suspension tilting module adapted to support two supporting elements so that tilting of said suspension system results in said two supporting elements being also tilted. Moreover, according to the present invention, this is obtained by providing a suspension tilting module comprising innovative steering arms or uprights adapted to support two supporting elements of a vehicle and adapted to allow both steering and tilting said two supporting elements.

[0013] In particular, according to the present invention, there is provided a suspension tilting module as claimed in claim 1, namely a suspension tilting module for a vehicle comprising at least two supporting elements wherein said model comprises a suspension system adapted to support said at least two supporting elements allowing titling of said at least two supporting elements and wherein said model further comprises an actuating device equipped with tilting means connected to said suspension, so that activation of said actuating device results in said suspension system being tilted together with said at least two supporting elements. According to the present invention, there is also provided a suspension tilting module as claimed in claim 2, namely a suspension tilting module wherein said actuating device comprises a rotatable shaft firmly fixed to said tilting means. Still according to the present invention, there is provided a suspension tilting module as claimed in claim 6, namely a suspension tilting module comprising a rigid frame adapted to be firmly fixed to the chassis of a vehicle and wherein said rigid frame is firmly fixed to said actuating device and pivotally connected to suspension arms of said suspension system so that activation of said actuating device results in said rigid frame being tilted together with said at least two supporting elements.

[0014] According to the present invention, there is also provided a suspension tilting module as claimed in claim 8, namely a suspension tilting module comprising a first steering arm or upright adapted to support a first supporting element and a second upright adapted to support a second supporting element, with said first and second uprights allowing steering of said first and second supporting elements on corresponding steering axis substantially vertical and being adapted to be tilted together with said first and second supporting elements, respectively.

[0015] Still according to the present invention, there is also provided a suspension tilting module as claimed in claim 15, namely a suspension tilting module wherein said actuating device comprises at least one electric motor.

[0016] Still according to the present invention, there is also a suspension tilting module as claimed in claim 17, namely a suspension tilting module wherein said supporting elements are skis.

[0017] There is also provided a driving titling suspen-

sion system as claimed in claim 19, namely a driving tilting suspension system for a wheeled vehicle comprising at least two wheels disposed on a common axle and comprising a suspension tilting module according to the present invention.

[0018] There is also provided a driving tilting suspension system as claimed in claim 20, namely a driving titling suspension system comprising at least two electric motors mechanically coupled to one of said at least two wheels so as to drive said one wheel.

[0019] There is further provided a driving tilting suspension system as claimed in claim 24, namely a driving tilting suspension system wherein said motors are received inside the hubs of said wheels.

[0020] Furthermore, there is provided a wheeled vehicle as claimed in claim 33, namely a wheeled vehicle equipped with a driving tilting suspension system according to the present invention.

[0021] Furthermore, there is provided a module for snowmobile as claimed in claim 38, namely a snowmobile wherein the skis are rigidly connected to each other.

[0022] Furthermore, there is provided a snowmobile as claimed in claim 41, namely a snowmobile equipped with a suspension tilting according to the present invention.

[0023] Further embodiments and/or details of the present invention are defined in the dependent claims.

BRIEF DESCRIPTION OF THE DRAWINGS

[0024] In the following, a description will be given with reference to the drawings of particular and/or preferred embodiments of the present invention; it has, however, to be noted that the present invention is not limited to the embodiments disclosed but that the embodiments disclosed only relate to particular examples of the present invention, the scope of which is defined by the appended claims. In particular, in the drawings:

figure 1 relates to a schematic perspective view of a first embodiment of the suspension tilting module and the tilting driving suspension system according to the present invention;

figure 2a relates to a front view of the embodiment of the present invention depicted in figure 1;

figure 2b relates to a rear view of the embodiment of the invention depicted in figure 1;

figure 3 relates to an perspective view of both the solution adapted to be implemented in the module and system according to the present invention;

figure 4a relates to schematic view of the titling module and system according to the present invention when tilted at a predefined angle;

figure 4b relates to a schematic view depicting the behavior of the tilting module and system according to the present invention when one of the wheels crosses a bump;

figure 5 relates to a schematic view of a upright implemented in the tilting module and system according to the present invention;

figures 5a and 5b relate to corresponding cross sectional views along the planes A-A and B-B depicted in figure 1, respectively;

figure 6 relates to a top view of a further steering solution adapted to be implemented in the tilting module and system according to the present invention;

figure 7 relates to a schematic perspective view of a further embodiment of the tilting module and system according to the present invention;

figure 8 relates to a schematic top view of a further embodiment of the tilting module and system according to the present invention;

figure 9 relates to a schematic view of the way driving means may be implemented in the driving tilting module system according to the present invention;

figure 10 relates to the schematic view of the tilting system according to the present invention when equipped with driving means received in the hubs of the wheels; and

figure 11 relates to a schematic view of a further possible electrical layout of the titling module and system according to the present invention when equipped with driving means received in the hubs of the wheels;

figure 12 relates to a schematic view of a titling snowmobile with a tilting suspension module according to the present invention;

figure 13 relates to a schematic perspective view of the tilting module for a snow vehicle according to the present invention;

figure 14 relates to a schematic view of the tilting module for a snow vehicle when the module is not tilted and when it is tilted at a predefined angle according to the present invention;

figure 15 relates to a schematic view of the skis and their connections to the tilting module according to the present invention.

DETAILED DESCRIPTION

[0025] While the present invention is described with reference to the embodiments as illustrated in the following detailed description as well as in the drawings, it should be understood that the following detailed description as well as the drawings are not intended to limit the present invention to the particular illustrative embodiments disclosed, but rather the described illustrative embodiments merely exemplify the various aspects of the present invention, the scope of which is defined by the appended claims.

[0026] In this detailed description first will be treated the aspect of the invention relating to a wheeled vehicle and in the second part the aspects related to a snow vehicle.

[0027] As apparent from the disclosure given above, the present invention is understood to be particularly advantageous when used for application in the automotive field; in particular, the present invention is understood to be particularly advantageous when applied to wheeled vehicles comprising at least two driving and steering wheels. For this reason, examples will be given in the following in which corresponding embodiments of the titling modular system according to the present invention are described in combination with steering and driving wheels. However, it has to be noted that the present invention is not limited to the particular case of a tilting module and system for steering and driving wheels but can be used in any other situation in which two wheels of a vehicle disposed on a common axle need to be tilted. Accordingly, it will become apparent from the following disclosure that the present invention may also be used for automotive applications in which, for instance, the driving wheels and/or the steering wheels are not tilted. In the following, with reference to figures 1, 2a and 2b, a first embodiment of the tilting module and system (identified by the reference numeral 1) according to the present invention will be described.

[0028] As apparent from figures 1, 2a and 2b, the tilting module and system depicted therein comprise a suspension structure or system defined by a rigid frame 17 and four suspension wishbone arms 10, 11, 12 and 13. In particular, said suspension structure comprises a first upper wishbone arm 12 defined by front wishbone portion 12a and rear wishbone portion 12b (see in particular figure 2b). In the same way, the suspension structure comprises a first lower arm 13 defined by a front wishbone portion 13a and a rear wishbone portion 13b. Similarly, the suspension structure comprises a second upper wishbone arm 10 defined by a front wishbone portion 10a and a rear wishbone portion 10b (see figure 2b). Moreover, the suspension structure comprises a second lower wishbone arm 11 defined by the front wishbone portion 11a and a rear wishbone portion 11 b. The front wishbone portions 12a and 13a of the first upper arm 12 and the first lower arm 13 are pivotally connected to the rigid frame 17 through pivotable connections 17d and 17b, respectively. In the same way, the front wishbone portions 10a and 11 a of the second upper arm 10 and the second lower arm 11, respectively, are pivotally connected to the rigid frame 17 through pivotable connections 17c and 17a, respectively. The rear wishbone portions 13b and 11 b of the first lower arm 13 and the second lower arm 11, respectively, are pivotally connected to the rigid frame 17 through pivotable connections 17e and 17f, respectively. The rigid frame 17 firmly supports an actuating device comprising two electric motors 16 and a reduction gear 15 adapted to be activated by said two electric motors 16 through a transmission belt 15a. Moreover, the reduction gear comprises a rotatable shaft 15b to which there is firmly fixed a tilting crank 14; as it will become more apparent with the following disclosure, rotating the rotatable shaft 15b results in the tilting crank being tilted. The rear wishbone portions 12b and 10b of the first upper wishbone arm 12 and the second upper wishbone arm 10 are pivotally connected to the rotatable shaft 15b. The suspension structure further comprises a first upright 9 adapted to rotatably support a first wheel 2 as well as a second upright 8 adapted to rotatably support a second wheel 3. The first upright 9 is supported by the first upper arm 12 and the first lower arm 13. In particular, the first upright 9 is pivotally connected to the first upper and lower arms 12 and 13 to pivotable connections 9a and 9b, respectively. In the same way, the second upright 8 is supported by the second upper arm 10 and the second lower arm 11; in particular, the second upright 8 is pivotally connected to the second upper arm 10 an the second lower arm 11 through pivotable connections 8a and 8b, respectively. As will become more apparent with the following disclosure, the pivotable.connections 9a, 9b, 8a and 8b allow both steering and tilting of the two wheels 2 and 3. Two motors 4 and 5 are received in the hubs of the wheels 3 and 2, respectively; moreover, in figure 1, reference numeral 6 identifies a brake disk of the wheel 3. A corresponding brake disk, even if not depicted in the drawings, is provided or the wheel 2. The suspension structure comprises moreover two shock absorbers 18 pivotally connected to both the tilting actuator or crank 14 and to the upper wishbone arms 10 and 12. In particular, a first shock absorber 18 is pivotally connected to the actuating crank 14 through a pivotable connection 14a and to the second upper arm 10 through a pivotable connection 18b. In the same way, a second shock absorber 18 is pivotally connected to the pivoting actuator or crank 14 through a pivotable connection 14b and to the first upper arm 12 through a further pivotable connection 18a. In the embodiment depicted in figures 2a and 2b (see in particular figure 1 and figure 2b) the two shock absorbers 18 are connected to the rear wishbone portions 10b and 12b, respectively; in particular, this is due to the fact that the pivoting crank 14 is provided, in this embodiment, at the rear end portion of the gearbox 15. However, it would also be possible to totally connect the two shock absorbers 18 to the front wishbone portions 12a and 10a, respectively, for in-

stance by providing the pivoting crank 14 on the front end portion of the gearbox 15. Finally, in figures 2a and 2b, reference numeral 20 identifies a road or ground on which a vehicle implementing the tilting module and system depicted therein is assumed to travel.

[0029] Before proceeding with the description of the way tilting is performed in the case of the tilting module and system depicted in figures 1, 2a and 2b, an alternative solution will be described in the following with reference to figure 3 relating to the way the wishbone arms of the suspension structure may be disposed; in particular, in figure 3, those parts already described with reference to figures 1, 2a and 2b are identified by the same reference numerals whilst some of the parts depicted in figures 1, 2a and 2b are omitted in figure 3 for reasons of clarity.

[0030] The most important aspects of the solution depicted in figure 3 relate to the fact that according to this solution, the front wishbone portions 12a and 10a of the first upper arm 12 and the second upper arm 10 are pivotally connected (not depicted in figure 3) about the same axis of the rotating shaft 15b of the gearbox 15. The solution depicted in figure 3 allows to further reduce the complexity of the suspension structure as well as its dimensions but the reciprocal disposition of the rear wishbone portions 12b and 10b, however, is not modified, as well as the reciprocal disposition of the pivoting crank 14 and the shock absorbers 18 which, as stated above, are pivotally connected to said pivoting crank 14 to pivotable connections 14a and 14b.

[0031] In the following, with reference to figure 4a, a description will be given of the tilting behavior of the tilting module and system of figures 1, 2a and 2b; again, in figure 4a, those component parts already described with reference to previous figures are identified by the same reference numerals.

[0032] As soon as tilting of the vehicle implementing the tilting module and system depicted in figure 4a is required (for instance, during cornering of the vehicle) electrical current is supplied to the electric motors 16; accordingly, the two electric motors 16 are activated, resulting in the gearbox 15 being also activated through the transmission belt 15a. That means that a rotational impulse is given to the rotatable shaft 15b. Assuming that said rotating impulse is such as to rotate the rotatable shaft 15b in the direction of rotation x depicted in figure 4a, a corresponding tilting impulse is also given to the tilting crank 14 so as to tilt this to the left in figure 4a. Accordingly, a corresponding displacement impulse is given to the suspension structure through the shock absorber 18. However, in view of the resistance exerted by the suspension structure, neither the tilting actuator or crank 14 is tilted to the left nor the suspension structure is displaced into the same direction. However, the resistance exerted by the suspension structure results in a reverse torque arising, with said reverse torque acting on the case of the gearbox 15, resulting in said gearbox 15 being rotated in a direction contrary to the direction x, namely in the direction y depicted in figure 4a. Since the gearbox 15 is firmly fixed to the rigid frame 17, also this rigid frame 17 is rotated of an angle α as a function of the rotating impulse originally given to the rotatable shaft 15b and the tilting crank 14. As stated above, the support arms 10, 11, 12 and 13 are either pivotally connected to the rigid frame 17 through the pivotable connection 17a, 17b, 17c, 17d, 17e and 17f or the rotatable shaft 15b (see in particular figure 2b). Moreover, the uprights 9 and 8 are pivotally connected to the suspension arms 12, 13 and 10, 11, respectively, through the further pivotable connections 9a, 9b, and 8a, 8b. Finally, the shock absorbers 18 are pivotally connected to the suspension arms 8 and 12 through corresponding pivotable connections 18b and 18a. Accordingly, the rotation of the rigid frame 17 of an angle α on the rotatable shaft 15b results in the whole suspension structure being tilted to the left in figure 4a together with the wheels 3 and 2 which, as depicted in figure 4a are also tilted of the same angle α. Obviously, the same considerations as stated above also apply in the case of a rotating impulse in the direction contrary to the direction x being given to the rotatable shaft 15b and the tilting crank 14; in this case, the suspension structure would be tilted in a corresponding contrary direction, i.e. to the right in figure 4a.

[0033] It results, therefore, from the above that the tilting module and system according to the present invention is an active tilting module and system, namely a module and system wherein the tilting function is obtained through the action of an actuating device which may comprise one or more electric motors eventually in combination with a gearbox connected to said electric motors through a transmission belt; alternatively, different actuating means may be used such as, for instance, hydraulic actuating means or the like. In the same way, equivalent transmission means may be use instead of the transmission belt 15a.

[0034] It has, moreover, to be appreciated that rotating the rigid frame 17 of an angle α as depicted in figure 4a results in the whole vehicle being tilted in the same angle α since the rigid frame 17 is firmly fixed to the chassis or body of the vehicle; accordingly, the result of the gravity and the centrifugal forces is kept oriented along the vertical body axis of the vehicle, thus allowing to avoid or at least minimize the rollover risk even if the track of the vehicle is now very curved compared to that of conventional vehicles.

[0035] For the purpose of exploiting the tilting function, the vehicle implementing the tilting module and/or system according to the present invention may be equipped with sensing means adapted to correct data relating to the dynamic behavior of the vehicles so as to activate the actuating means (the electric motor 16 and the gearbox 15 in the case of the system depicted in figure 4a) as a function of the data collected. In particular, the sensing means may be of the kind adapted to collect data relating to the lateral acceleration and/or forces of the vehicle. Accordingly, as soon as the vehicle approaches a curve

or cornering and a driving action is exerted by the driver, the resulting lateral acceleration acting on the vehicle may be detected and measured and a corresponding signal may be sent to a central unit adapted to activate the actuating means, thus resulting in the vehicle being tilted so as to compensate the lateral acceleration felt by the vehicle. This solution, in particular, allows to compensate any lateral acceleration, i.e. also lateral acceleration arising in situation other than during cornering. For instance, in the case of lateral wind, also resulting lateral acceleration acting on the vehicle can be detected and the vehicle can be tilted contrary to the lateral wind and also in the case of the vehicle traveling on a straight road.

[0036] When one of the two wheels 2 and 3 crosses a bump, the tilting module and/or system according to the present invention behaves as depicted in figure 4b, where like features depicted therein are identified by like reference numerals.

[0037] In particular, in the example of figure 4b, it is assumed that the wheel 2 crosses a bump 20a of the surface r road 20; in this case, as depicted in figure 4b, the tilting module and/or system does not work because imposed vertical displacement of the wheel 2 is absorbed by the shock absorber 18. In particular, this is due to the irreversibility of the gearbox 15 connected to the tilting crank 14, which, in turn, is connected to the shock absorber 18 through the pivotable connection 14b and 18a (see figure 2b). Accordingly, the crank 14 is not tilted as a consequence of the perturbation acting on the suspension structure but only the wheel 2 is lifted as depicted in figure 4b. Accordingly, the rigid frame is not rotated and the vehicle is not tilted.

[0038] As stated above, suspension tilting module and/or systems must allow high rotational angle involved during both tilting and steering. In the following, with reference to figures 5, 5a and 5b, an example of a solution adopted in the tilting module and/or system according to the present invention and allowing high rotational titling and steering angles will be described; as usual, in figures 5, 5a and 5b, like features already described above with reference to previous figures are identified by like reference numerals.

[0039] In figures 5, 5a and 5b, there is depicted one of the two uprights of the tilting module according to the preset invention, namely the upright 8 adapted to rotatably support the wheel 3 (the left wheel in figure 2a); however, it has to be understood that the same considerations as stated above also apply to the upright 9 adapted to rotatable support the wheel 2 (the right wheel in figure 2a). Accordingly, a description of the upright 9 is omitted. As apparent from figures 5, 5a and 5b, the upright 8 comprises an upper and a lower fork, each defined by two bearing means 8ac, 8ad and 8bc, 8bd, respectively. The upper bearing means 8ac and 8ad are adapted to rotatably receive a rotatable shaft 8ab and define, in combination, a hinge axis allowing rotation of the shaft 8ab. In the same way, the lower bearing means 8bc and 8bd rotatably support a lower rotatable shaft 8bb and define a lower hinge axis that allows rotation of the lower shaft 8bb. It appears, therefore, clearly that the large tilting angle between the suspension arms 10 and 11 and the upright 8 are allowed by the rotation of the two rotatable upper and lower shafts 8ab and 8bb about the bearing means 8ac, 8ad and 8bc, 8bd, respectively. In particular, in this respect reference is made to figure 4a showing the reciprocal disposition of the suspension arms 10 and 11 with respect to the upright 8. Moreover, the upper rotatable shaft 8ab comprises a receiving portion 8ae shaped to rotatably receive a ball shape portion 8af of a ball joint. Moreover, a protruding portion 8ag extends from the ball shaped portion 8af. The protruding portion 8ag allows the ball joint and, accordingly, the upright 8 to be connected to the upper suspension arm 10. In the same way, the lower rotatable shaft 8bb comprises a receiving portion 8be adapted to rotatably receive the ball shaped portion 8bf from which a protruding portion 8bg extends allowing the upright 8 to be connected to the lower suspension arm 11. As stated above, the ball shaped portions 8af and 8bf are rotatably received inside the receiving portions 8ae and 8be, respectively. Accordingly, this allows the rotation of the upright 8 in the direction identified by the two arrows in figure 5, i.e. on a rotation axis substantially vertical and allows, therefore, the rotations involved during steering. To this end, the rotatable shaft 8ab is provided with an end portion 8ah adapted to be connected with a steering rod (not depicted in figures 5, 5a and 5b). During tilting of the suspension module and/or system, the two ball joints are subjected to minor rotations, for instance to the minor rotations arising when the upright 8 is not disposed perfectly vertical. The ball joints allow the rotations involved during steering while the rotatable shafts 8ab and 8bb are subject to minor rotations.

[0040] In the solution described above with reference to figures 5, 5a and 5b, the steering axis is defined by the two ball joints upright 8. However, the location of the steering axis is an important design feature when high performance, such as high drive feeling and stability have to be obtained. In fact, any factor limiting the allowable location of the steering axis could severely influence the performances of the vehicle. Accordingly, and still according to the present invention, a further solution has been proposed relating to the upright used for the suspension structures; this further solution will be described in the following with reference to figure 6, wherein like features already described with reference to previous figures are identified by like reference numerals. Again, whilst in the following a description will be given relating to one upright, in particular of the upright 8 adapted to rotatably to support the wheel 3 (left wheel in figure 2a), it has to be appreciated that the same considerations as stated below also apply to the second upright, namely the upright 9 adapted to rotatably support the wheel 2 (right wheel in figure 2a). As apparent form figure 6, the wishbone portions 10a and 10b of the upper wishbone arm are not connected to each other but are both con-

nected to the rotatable shaft 8ab which is in turn rotatably received inside the bearing means 8ac and 8ad. This reciprocal disposition of the wishbone portions 10a and 10b allows to solve the problem relating to the effective position of the bearing axis; in particular, in this way, a virtual steering axis (perpendicular to the plane of figure 6) is created passing through the virtual point G. This solution is more complicated that described above with reference to figures 5, 5a and 5b since the suspension wishbone arm cannot be realized as a single element but two anchor points are needed on the rotatable shaft 8ab to connect the wishbone portions 10b and 10a. These anchor points may be ball joints allowing small rotations and displacements during tilting. However, the solution depicted in figure 6 may be preferred in all those situations in which the steering axis needs to be placed in part of the wheel hub that would not be allowed in the case of the solution depicted in figures 5, 5a and 5b.

[0041] In the following, a first alternative solution of the way the shock absorbers may be disposed in the tilting module and/or system according to the present invention will be described with reference to figure 7, wherein like features already described with reference to previous figures are identified by like reference numerals.

[0042] As apparent from figure 7, in the solution depicted therein, the two shock absorbers are disposed above the rigid frame 17. The two shock absorbers are pivotally connected to the suspension system at respective opposite sides through corresponding actuating arms 30 and 31. Moreover, the two shock absorbers are activated by two corresponding tilting cranks adapted to be tilted as a result of a mechanical input transmitted by the actuating means (still disposed inside the rigid frame 17) through corresponding levels (not depicted in figure 7). That means that, during tilting, one shock absorber is displaced along the first predefined direction whilst the second shock absorber is displaced along a second predefined direction contrary to said first predefined direction, In particular, the direction of displacement of the two shock absorbers is parallel to the common axle of the two wheels 2 and 3. Accordingly, as a result of the contrary displacement of the two shock absorbers, an action is exerted by the two arms 30 and 31 on the suspension structure so that the rigid frame 17 is tilted at a predefined angle along with the whole suspension structure, the wheels and the vehicle. The solution depicted in figure 7 is more complicated than that described above with reference to figures 1, 2a and 2b but may be preferred in those situation in which the aerodynamic behavior of the suspension module and/or system has to be improved; in fact, this solution allows to locate the shock absorbers on board the vehicle. The drawback of this solution is the increased complexity due to the increased number of tilting cranks and transmission levers.

[0043] In the following, a further alternative solution of the way the shock absorbers and the actuating device may be reciprocally located and disposed in the tilting module and/or system according to the present invention will be described with reference to figures 8 and 8a, wherein, as usual, like features and/or component parts already described with reference to previous figures are identified by like reference numerals.

[0044] The main difference between the solution depicted in figures 8, 8a and that of figures 2, 2a and 2b relates to the fact that in the solution of figures 8 and 8a, the actuating means (in particular, the gearbox 15) are disposed so that the rotatable shaft 15b of the gearbox 15 lies in a vertical plane with respect to the road, i.e. in a plane vertical with respect to figure 8. The two shock absorbers 18 are still provided connected to the gearbox 15 through a first L-shaped arm 4a firmly fixed to the rotatable shaft 15b. That means that as soon as the rotatable shaft 15b is rotated, the L-shaped arm 4a is also rotated so as to push one shock absorber 18 in a first direction whilst the second shock absorber 18 is pulled in a direction substantially contrary to said first direction. The two shock absorbers 18 are furthermore connected to the suspension structure through further L-shaped arms and transmission arms. In particular, the left shock absorber 18 in figure 8 is connected to the suspension structure through a first L-shaped arm 41 and a transmission arm 43; moreover, the L-shaped arm 41 is usually anchored to the rigid frame 17 through a pivotable connection 46a and a connection arm 45. In the same way, the right shock absorber 18 in figure 8 is usually connected to the suspension structure through a second L-shaped arm 42 and a second transmission arm 44; again, the L-shaped arm 42 is pivotally anchored to the rigid frame 17 through a pivotable connection 46b and an anchoring arm 46. In figure 8, the left shock absorber and the left L-shaped arm 41 and the transmission arm 43 are not symmetrically disposed with respect to the right shock absorbers 18, the right L-shaped arm 42 and the right transmission arm 44 in spite of the fact that neither the wheels 2 and 3 nor the suspension system are tilted. However, it has to be appreciated that the non-symmetrical reciprocal disposition of the left and right shock absorbers and the corresponding L-shaped arms and transmission arms only arises during tilting; the purpose of figure 8 is, therefore, only that of clarifying the displacement and/or rotations of the component parts which, as stated before, in normal conditions such as, for instance during traveling on a straight road without tilting, are disposed symmetrically. The right reciprocal disposition of the shock absorbers, the L-shaped arms under normal conditions is, therefore, that depicted in figure 8a. It appears clearly from figure 8 that a rotation of the rotatable shaft in the direction X results in the left shock absorber 18 being pushed or displaced along the direction Y whilst the right shock absorber 18 is pulled in the direction Y'. Accordingly, the left L-shaped arm 14 is also rotated in the X direction whilst the right L-shaped arm 42 is rotated in the contrary direction X'. Moreover, since also in this case, the rigid frame is firmly fixed to the chassis of the vehicle, also the vehicle is tilted at the same angle, thus allowing again the resultant of the grav-

ity and the centrifugal forces to be kept oriented along the vertical body axis of the vehicle, thus allowing to avoid rollover.

[0045] As stated above, the suspension tilting module and/or system according to the present invention is conceived so as to allow electric motors to be received inside the hubs of the wheels. Placing electric motors in the inside of the hubs of the wheels as depicted in figures 1, 2a and 2b allows to realize a tilting driving module adapted to be used either in combination with a main drive engine or even in addition to a main engine so as to realize any bridge vehicle. In particular, several forward train architectures are possible comprising for instance a purely electric architecture, wherein the electric power is stored in an appropriate system such as a battery. Alternatively, the brake architecture can be realized, wherein the primary source of energy is an internal engine that can be connected in series or in parallel to the electric motors. Moreover, suitable energy storage allows to manage the power peaks required by the electric motors. The adoption of the tilting module according to the present invention equipped with two electric motors on the two wheels of a common axle and the connection of the second axis (single wheel axis in the case of a three cycle, two wheel axis in the case of a car) to the internal combustion engine permits to transform a vehicle with three or four wheels in a very simple hybrid vehicle of the mixed parallel/series type. The advantages offered by this configuration relate to the fact that it can operate several different modes, namely a parallel hybrid mode and a series hybrid mode. In the parallel mode, the electric motors and the internal combustion engine are used to drive always at the same time. In this case, the electric motors can be used for regenerative braking. Moreover, an electric generator connected to the internal combustion engine can be used to charge the battery or, alternatively, electric motors can be used for this purpose or, alternatively, constant regenerative braking of the corresponding axle is used while the internal combustion engine is driving the other axis. This means that a certain amount of power generated by the internal combustion engine is transmitted through the road and the wheels to the electric motors and, finally, to the battery. In the series hybrid mode, the internal combustion engine generate mechanical power that is transformed into an electric one by a generator. This energy is transferred entirely to the battery as the transmission to the wheels is disengaged. According to a further operation mode (zero emission vehicle), the internal combustion engine is shut down and the electric motors are driven using the energy stored in the battery. The relatively small amount of energy stored in the battery allows short range mobility usually sufficient in the case of city centers. However, in all cases, it is possible to take advantage from the regenerative braking. In a hill truck, the costing braking with electric motors permits a recharge of the batteries without energy dissipation on the brake. Finally, from the point of view of vehicle stability, the introduction of an electric motor on each wheel allows the independent control of the torque on each wheel with the result of obtaining the functionality of an electronic differential with the related advantages of improved performances and safety.

[0046] In the following, with reference to figure 9, a first example of a possible electrical layout of a power train adapted to be implemented in the tilting module according to the present invention will be described. In particular, in figure 9, the two wheels of the tilting module are identified by the reference numerals 2 and 3, whilst the electric motors received in the hubs of the wheels are identified by the reference numerals 4 and 5. On the contrary, the whole suspension structure of the tilting module is not depicted in figure 9; it has, however, to be appreciated that the electric layout depicted in figure 9 is adapted to be implemented in any of the tilting modules described above.

[0047] In the layout of figure 9, electrical power stored in the storing means 101 may be supplied to the electric motor 4 to the electrical connection 101b, the power electronic 107 and the final electrical connection 107a. In the same way, electrical power may be supplied from the storing means 101 to the electric motor 5 through the electrical line 101 a, the corresponding power electronic unit 106 and the final electrical connection 106a. This configuration allows the two wheels 2 and 3 to be driven separately and independently from each other; for instance, one of the two wheels 2 or 3, let us say the wheel 3, may be driven by supplying electrical power to the corresponding motor 4, whilst no electrical power is supplied to the electric motor 5 and so that the wheel 2 is not driven. The contrary situation, namely the situation that the electrical power is supplied to the electric motor 5 and not to the electric motor 4, give the result that the wheel 2 is driven whilst the wheel 3 is not driven. Moreover, it is also possible to supply contemporarily the two electric motors 4 and 5 with electrical powers of corresponding different intensity, thus resulting in different mechanical torques being applied to the wheels 3 and 2. The supply of electrical power to one or both of the electric motors 4 and 5 is controlled by the control unit 108 in cooperation with the power electronic unit 107 and 106, respectively. To this end, sensing means (not depicted in figure 9) may also be used, with said sensing means being adapted to collect data relating to the driving conditions and/or the behavior of the vehicle, in particular of the two wheels 2 and 3. The data collected are supplied to the control unit 108 which, in turn as a function of the data collected, controls the function of the power electronic units 107 and 106, thus controlling the supply of the electrical power from the storage means 101 to the two electric motors 4 and 5, respectively. It is also possible to use the two electric motors 4 and 5 as electrical power generating means so as to recharge the storing means 101; for instance, in case of braking of one or both of the two wheels 2 and 3, the energy generated may be supplied from one or both of the electric motors 4 and 5 to the storing means 101 to the power electronic units

107 and 106. The storing means may, therefore, be recharged and the stored energy and/or electric power may be used for the purpose of driving the two electric motors 4 and 5. The layout of figure 9 represents, therefore, an electromechanical module which allows electrical power to be transferred from one of the two electric motors 4 and 5 to the other one of said two motors, thus allowing mechanical torque to be transferred from one of the two wheels 2 and 3 to the other one of said two wheels; in particular, in the case of the layout depicted in figure 9, the electrical power generated by the two electric motors 4 and 5 is first supplied to the storing means 101 where said electrical power is kept at disposal for the purpose of driving said two motors. As soon as the need arises, electrical power is supplied to either one or both of the two motors 4 and 5. It appears, therefore, clearly that the two electric motors 4 and 5 may be driven independently and separately, thus allowing corresponding different mechanical torques to be supplied to the two wheels 2 and 3. Assuming that the layout and/or the electromechanical module of figure 9 is implemented in a vehicle driven by a main engine, for instance a combustion engine acting on the rear wheels, the module of figure 9 may be used for operating the front wheels, thus exploiting the three functions of driving, tilting and steering the wheels; however, the situation is also possible, wherein the front wheels are driven by the main engine whilst the module of figure 9 is used for operating the rear wheels. Moreover, it is also possible to use the module of figure 9 to additionally actuate (i.e. by means of the two electric motors 4 and 5) the wheels driven by the main engine, namely either the front or the rear wheels. Independently thereon which wheels are operated by the main engine and the module of figure 9, the electrical operation of said module may be summarized as follows. In normal driving conditions, the two electric motors 4 and 5 may either remain inoperative or even be used for the purpose of driving the vehicle. When the driving conditions change, for instance when cornering fast, when obstacles are to be avoided or in the case of slippery conditions due to snow, ice, rain or the like, a particular operation of one or both of the two electric motors 4 and 5 may be requested, for instance to two corresponding signals supplied by the control unit 108 to one or more of the power electronic units 107 and 106 as a function of data relating to the driving conditions selected by the sensing means and supplied to the control unit 108. Accordingly, either only one of the two electric motors 4 and 5 may be supplied with electrical power or one of two electric motors may be supplied with additional electrical power resulting in one of the two wheels 2 and 3 being supplied with additional mechanical torque. However, the same electrical torque may also be sent to the two electric motors 4 and 5, resulting in the two wheels 2 and 3 being driven the same way or, alternatively, the two electric motors may even be operated so as to brake a wheel while giving traction to the other, resulting in one of the wheels being driven in a different direction with respect to the other.

With the embodiment disclosed above with reference to figure 9, an electrical power may be reciprocally transferred between the two electric motors, thus resulting in corresponding mechanical torque being transferred from one motor to the other; in particular, as verified above in the embodiment of figure 9, this is obtained by preventively storing the electrical power generated by one of both of said two motors in the storing means and by subsequently supplying the stored electrical powers to one of both of said electric motors. However, the need may also arise of transferring electrical power directly from one motor to the other, i.e. without preventively storing said electrical power in the storing means. An example of an electrical layout allowing to directly transfer energy and/or electromechanical power between the two motors, thus allowing to directly transfer mechanical torque between the two corresponding wheels will be disclosed in the following with reference to figure 10, wherein component parts already disclosed with reference to figure 9 are identified by the same reference numerals.

[0048] The electrical layout depicted in figure 10 is similar to that disclosed above with reference to figure 9 but different from that of figure 9 in that, in the layout of figure 10, the two power electronic units are directly connected through one or more bypass connecting lines 106c, essentially adapted to allow electrical power or energy to be directly transferred between said two power electronic units 107 and 106. The two power electronic units 107 and 106 are still connected through connecting lines 108b and 108a through a control unit 108 adapted to control the functioning of the two power electronic units 107 and 106, i.e. the energy transfer between said two power electronic units 107 and 106. Accordingly, in a way similar to that of the layout with reference to figure 9, electrical power or energy may be transferred between the two electric motors 4 and 5, these resulting in turn in the possibility to transfer mechanical torque between the two wheels 2 and 3. Again, a sensing means (not depicted in figure 10) may be provided for the purpose of collecting data related to the driving conditions and/or the dynamical behavior of the vehicle and supplied to the control unit 108 from which corresponding signals are supplied to the two power electronic units 107 and 106, so as to control the transfer of electrical power therebetween as a result of the data collected by said sensing means. The most advantage offered by the module of figure 10 with respect to that of figure 9 relates to the fact that energy used for the active differential function, i.e. for activating two electric motors 2 and 3 so as to drive correspondingly the two wheels 2 and 3 is easily managed by the control unit 108 without involving other parts of the electromechanical module and/or of the vehicle such as, for example the storing means or battery pack 101. This allows, in particular, to increase deficiency of the energy exchange in the module. The purpose of said storing means 101 may, therefore, be limited to that of supplying electrical power to the control unit 108 to connecting line not depicted in figure 10. Electrical power is,

therefore, collected from one of the two motors (either the motor 4 or the motor 5) and directly transferred to the other motor without temporarily storing said electrical power; accordingly, the electrical power transferred essentially corresponds to the electrical power generated by the motor from which said electrical power is collected, for instance during braking of one of the two wheels. It is also possible to provide dissipating means (not depicted in figure 10) between the two reversible power electronic units 107 and 106 for the purpose of passively dissipating the electrical power generated by the two motors 4 and 5; in fact, the situation may arise in which the electrical power requested for activating one electrical motor is less than the electrical power generated by the other motor. Accordingly, at least part of the electrical power generated by said motor and collected from said motor must be partially dissipated; as stated above, this can be obtained by means of dissipating means provided between the two power electronic units 107 and 106. For instance, said dissipating means may comprise electrical resistance or the like.

[0049] In all the examples described above of the tilting module according to the present invention, the driving motors 4 and 5 received in the hubs of the wheels 2 and 3 are depicted as electric motors directly acting on the axle of the two wheels. However, other solutions are also possible depending on the circumstances. A possible alternative solution is depicted in figure 11 and comprises an electric motor 4 acting on cooperation with a gearbox 15 and received, together with said gearbox, in the hub of the wheel 3. Moreover, in figure 11, reference numeral 6 identifies the brake disk of the wheel. The use of the gearbox 15 according to the solution depicted in figure 11 allows to reduce the torque required to the electric motor 4 and to increase its maximum speed. In this case, the electric motor 4 has a radial dimension lower than the direct drive solutions depicted in the previous figures. It results, therefore, from the disclosure given above that the tilting module and/or system according to the present invention allows to overcome the drawbacks affecting the prior art tilting systems. In particular, the tilting module according to the present invention allows to obtain large tilting and steering angles. Moreover, the provision of electric motors in the two tilting wheels allows the realization of a driving electromechanical tilting module and/or system, without these motors negatively affecting the tilting angles. Accordingly, a high transmission efficiency is obtained, moreover, the module according to the present invention allows the realization of hybrid tilting vehicles and to implement vehicle dynamic control controlling the torque independently on each tilting wheel.

[0050] The suspension tilting module shown in figure 2a, 2b in the case of a wheeled vehicle, can be applied to a snow vehicle introducing the necessary changes in order to fix the skis to the tilting module. The functioning of the tilting module for the snow vehicle is the same to the functioning for the wheeled vehicle.

[0051] In figure 12 is depicted a snowmobile according to the present invention comprising two skis on the front frame. In a embodiment according to the present invention the snowmobile is driven by a drive track (301). The two skis are connected to a suspension tilting module (302) according to the present invention.

[0052] Figure 13 shows the modified suspension titling module so that it can be applied to a snowmobile. The reference numbers have been kept consistent with the number already used in figures 2a, 2b. The main difference is that in the embodiment two skis replace the wheels. The fundamental elements of the suspension system are four arms (10, 11, 12, 13), which can be for example wishbones arms. The arms are linked to a rigid box (17) and to two uprights (8, 9). The two skis (2, 3) are rigidly linked to the uprights (8, 9) through two steering spindles (201, 202), The rigid box (17) is rigidly connected to the frame of the snowmobile. Two shock absorbers (18) are linked on one side to the end of the upper arms (10, 12) and to the tilting crank (14) on the other side. The tilting actuating device is of rotative type and it is realized with an electromechanical servo-system constituted by electric motors (16) and a reduction gear (15) linked to the tilting crank (14). The rotation of the tilting crank (14) relative to the rigid box (17) determines a roll of the vehicle.

[0053] The steering command is transferred from the handlebar to the skies by two steering rods (201, 202), connected to the uprights (8, 9) by two joints.

[0054] Figure 14 explain the kinematic behavior of the tilting suspension system, which is analogous to the one described previously for the wheeled vehicle. During cornering the electric motors (16) are supplied with an electric current to provide a torque to the tilting crank (14) through the reduction gear (15). Then the tilting crank (14) results tilt to the left. Through the shock absorbers (18) a displacement is given to the suspension structure. However, due to the resistance exerted by the suspension structure, neither the tilting actuating device or tilting crank (14) is tilted to the left nor the suspension structure is displaced into the same direction. However, the resistance exerted by the suspension structure results in a reverse torque arising, with said reverse torque acting on the case of the gearbox (15), resulting in said gearbox (15) being rotated in a direction contrary to the previous one. Since the gearbox (15) is firmly fixed to the rigid frame (17), also this rigid frame (17) is rotated of an angle α as a function of the torque originally given to the tilting crank (14). Considering the connection between the suspension elements, the suspension structure results tilted to the left with the skis (2, 3) of the same angle α. The rigid frame (17) is firmly fixed to the chassis of the vehicle and then the whole vehicle is tilted of the same angle α.

[0055] The kinematic characteristic of the module permits to tilt the body of the snowmobile and the skis in a curve, compensating the lateral acceleration on the driver. When the vehicle approaches a curve the driver acts on the steer system to generate lateral forces that starts

the vehicle cornering and induces lateral accelerations to the vehicle. The tilting angle can be governed directly by the driver as in the motorcycle or by a control system and a suitable tilting actuator. In the first case (passive tilting) the tilting degree of freedom is controlled by the driver by the steer angle and by its lateral position on the vehicle. In the second case (controlled tilting) a closed loop control system based on the measurement of the lateral acceleration relative to the body acts on the tilting actuating device so as to reduce the lateral acceleration felt by the driver. To this end the actuator is driven so as to rotate in the opposite direction than the body.

[0056] The tilting actuator and the relative control system is based on electric central units (ECUs).

[0057] If one of the skis crosses a hole, the tilting actuating device does not work because the imposed vertical displacement of the ski (2, 3) is absorbed by the shock absorbers (18). The irreversibility of the gearbox (15) connected to the tilting crank (14) is helpful from the point of view of the tilting control system, as this allow the crank (14) not to move as a consequence of a perturbation to one of the suspensions such as a hole or a bump on the snow.

[0058] Particularly important elements of the suspension configuration accroding to the present invention are the spherical joints (8a, 8b, 9a, 9b) between the suspension arms (10, 11, 12, 13) and the uprights (8, 9): these elements are necessary to reach high tilting angles 45 - 50 degrees. To insure the functionality of the suspension the joints have to be able to allow the high rotational angles involved during tilting and steering. Standard spherical joints for automotive applications cannot be used. These joints are in fact designed to allow free rotation about the steer axis and an angle in the range or 40 degrees (overall) in other two directions. Although the steer angle of automotive spherical joints is enough also for a tilting vehicle, the other angles are not adequate for a high tilting suspension where angles in the range of 100 degrees are needed.

[0059] The spherical joints applied in the snowmobile are the same joints which have been described previously in detail for a wheeled vehicle.

[0060] The proposed solution integrates the tilting and steering functions in one device. Four of these joints (8a, 8b, 9a, 9b) need to be installed on a double wishbone suspension to allow the tilting and steering functions. The steering rods (203) are linked to the upper joints (8a, 9a) to command the steering angle of the skis (2, 3) around the steering spindles (201, 202). The other side of the rods is linked to the handlebar to complete the steering command. In figure 15 the connections between the skis and the suspension tilting module are depicted. A further advantage of the present invention is that as the vehicle is able to incline its body, modified skis can be used instead of traditional ones. In a particular embodiment according to the present invention the skis are similar to commercial carving skis. These skis have a variable profile along the length (408). The upright is linked to the ski through a steering spindle constituted by a vertical rods (405) and a horizontal rods (404) which has two terminal spindles (406, 403) to connect the upright to the anchor plates (407, 401) of the ski (402). The spindle (406) is connected fixed to the anchor plates (407) on the ski, while the spindle (403) is inserted in the bore of the plates (401). This bore permits longitudinal displacements of the upright and then the inflection of the ski when the snowmobile approaches a curve. This inflection coupled with the variable profile of the skis (408) improves the dynamic behavior of the vehicle during cornering respect the traditional ski. In fact during cornering, the front part, with carving skis does not slide as with the traditional skis. This improves the vehicle stability in corners at high speed and the drive feeling. The longitudinal displacement of the upright is also an advantage if the ski crosses a hole. In a further embodiment according to the present invention a new driving track at the rear part can be used. A track with a round shape as a motorcycle tire can improve the behavior of the snowmobile during cornering because it guarantees a better contact area when the vehicle is banking to provide a better grip. This round shape track can be used also in combination with the previous described suspension tilting module. In a particular embodiment of the present invention the tilting actuating device employs an electromechanical tilting servoactuator to drive the tilting crank. This permits to realize a by-wire solution for the tilting actuation where the input command is provided by the driver with the handle bar. The driver controls only the steering input and the by wire system controls the stability of the snowmobile working on the tilting actuator starting from the drive input and the signals from the accelerometer. This solution has redundancy characteristic due to the presence of two electric motors, two mechanical transmission, two power electronics and two ECUs.

[0061] In a further embodiment according to the present invention the tilting actuating device is a hydraulic actuator. This solution replaces the electromechanical actuator with one constituted by one electric motor, one pump and two hydraulic cylinders. These cylinders are linked to the tilting crank to provide the tilting torque to bank the snowmobile. The advantages of this solution consist in the reduction of the weight of the tilting actuator and in the better optimization of the vehicle layout due to the more compactness of the hydraulic solution than the eletromechanical one. The system remains a by wire solution with an ECU which controls the tilting angle considering the measures of the lateral acceleration and the driver commands.

[0062] In a further particular embodiment according to the present invention a free tilting solution for the suspension of the tilting snowmobile is disclosed. In this case no tilting actuator is present to command the tilting. The driver can command the tilting of the snowmobile moving his body such as in a motorcycle. The advantages of this solution consist in the reduction of the overall mass on the snowmobile and in the improved drive feeling of the

driver. With this solution the driver can command directly the steer and the tilt of the vehicle without closed loop automatic system. For this reason this solution is adapt for expert driver because there is not automatic system which can prevent lose of control of the snowmobile. For this embodiment, an additional device must be inserted to lock the tilting at low speed or when the vehicle is parking. A brake linked to the tilting crank must be inserted to lock the tilting. This device can be constituted by a brake disc linked to the tilting crank, commanded by a caliper, a hydraulic pump and a lever. The brake disc is rigidly linked to the tilting crank and it has been locked by the caliper. The caliper is actuated by a hydraulic pump with a hydraulic circuit. The driver commands the tilting lock device with the lever inserted on the handlebar of the snowmobile.

[0063] When the vehicle moves at low speed or during parking the driver can command this brake by the lever to lock the tilting of the snowmobile. In this case the vehicle is equal to a normal snowmobile, where the suspensions are locked. In the previous embodiments of the electromechanical tilting actuator and of the hydraulic tilting actuator the tilting crank can be locked respectively by the electric motors or by an isolation valve.

[0064] Of course, it should be understood that a wide range of changes and modifications can be made to the embodiments described above without departing from the scope of the present invention. It has, therefore, to be understood that the scope fo the present invention is not limited to the embodiments described but is rather defined by the appended claims.

Claims

1. A suspension tilting module (1) for a vehicle comprising at least two supporting elements (2, 3) disposed between the vehicle and the floor , said module comprising a suspension system adapted to support said at least two supporting elements allowing tilting of said at least two supporting elements, said module being
   characterized in that
   it further comprises an actuating device equipped with tilting means (14) pivotally connected to said suspension system, so that activation of said actuating device results in said suspension system being tilted together with said at least two supporting elements.

2. A module as claimed in claim 1,
   characterized in that
   said actuating device comprises a rotatable shaft (15b) firmly fixed to said tilting means (14).

3. A module as claimed in claim 2,
   characterized in that
   said rotatable shaft lies in a plane substantially horizontal.

4. A module as claimed in claim 2,
   characterized in that
   said rotatable shaft lies in a plane substantially vertical.

5. A module as claimed in one of claims 1 to 4,
   characterized in that
   said tilting means (14) are pivotally connected to said suspension system through shock absorbers (18).

6. A module as claimed in one of claims 1 to 5,
   characterized in that
   said suspension system comprises a rigid frame (17) adapted to be firmly fixed to the chassis of said vehicle, said rigid frame being firmly fixed to said actuating device and pivotally connected to suspension arms (10, 11, 12, 13) of said suspension system so that activation of said actuating device results in said rigid frame being tilted together with said at least supporting elements.

7. A module as claimed in claim 6,
   characterized in that
   said suspension arms comprise a first upper arm (12) and a first lower arm (13) adapted to pivotally support , in combination, a first supporting element (2) of said at least two supporting elements, as well as a second upper arm (10) and a second lower arm (11) adapted to pivotally support, in combination, a second supporting element (3) of said at least two supporting elements so as to allow tilting of said first and second supporting elements (2, 3).

8. A module as claimed in one of claims 1 to 7,
   characterized in that
   said suspension system comprises a first upright (9) adapted to support a first supporting element (2) of said at least two supporting elements and a second upright (8) adapted to support a second supporting element (3) of said at least two supporting elements, said first and second uprights (9, 8) allowing steering of said first and second supporting elements on corresponding steering axes substantially vertical and being adapted to be tilted together with said first and second wheels, respectively.

9. A module as claimed in claim 8,
   characterized in that
   said first upright (9) is pivotally connected to first upper and lower arms (12, 13), and **in that** said second upright is pivotally connected to second upper and lower arms (10, 11).

10. A module as claimed in claim 9,
    characterized in that
    said first upright (9) comprises a first upper pivotable

connection (9a) pivotably connecting said first upright (9) to said first upper arm (12) and a first lower pivotable connection (9b) pivotably connecting said first upright (9) to said first lower arm (13) and **in that** said second upright (8) comprises a second upper pivotable connection (8a) pivotably connecting said second upright (8) to said second upper arm (10) and a second lower pivotable connection (8b) pivotably connecting said second upright (8) to said second lower arm (10), said first upper and lower pivotable connections (9a, 9b) allowing both tilting and steering of said first upright (9), said second upper and lower pivotable connections (8a, 8b) allowing both tilting and steering of said second upright (8).

11. A module as claimed in claim 10, **characterized in that** said first upper pivotable connection (9a) comprises a first upper tilting shaft pivotally supported by corresponding bearing means , **in that** said first lower pivotable connection (9b) comprises a first lower tilting shaft pivotally supported by corresponding bearing means , **in that** said second upper pivotable connection (8a) comprises a second upper tilting shaft (8ab) pivotally supported by corresponding bearing means (8ac, 8ad), and **in that** said first lower pivotable connection (8b) comprises a first lower tilting shaft (8bb) pivotally supported by corresponding bearing means (8bc, 8bd), said first upper and lower tilting shafts allowing tilting of said first upright (9), said second upper and lower tilting shafts (8ab, 8bb) allowing tilting of said second upright (8).

12. A module as claimed in claim 11, **characterized in that** said first upper and lower tilting shafts are pivotally connected to said first upper and lower arms (12, 13), respectively, through corresponding first upper and lower pivotable steering connections , and **in that** said second upper and lower tilting shafts (8ab, 8bb) are pivotally connected to said second upper and lower arms (10, 11), respectively, through corresponding second upper and lower pivotable steering connections (8ae, 8be), said first upper and lower pivotable steering connections allowing steering of said first upright (9), said second upper and lower pivotable steering connections (8ae, 8be) allowing steering of said second upright.

13. A module as claimed in claim 12, **characterized in that** said first upper and lower pivotable steering connections and said second upper and lower pivotable steering connections (8ae, 8be) comprise steering ball joints.

14. A module as claimed in claim 13, **characterized in that** each of said ball joints comprises a substantially spherical portion (8af, 8bf) pivotally received in a corresponding receiving portion (8ae, 8be) of said tilting shafts (8ab, 8bb) and a protruding portion (8ag, 8bg) received in a corresponding receiving portion (10c, 11c) of said arms (12, 13, 10, 11), respectively.

15. A module as claimed in one of claims 1 to 14, **characterized in that** said actuating device comprises at least one electric motor (16).

16. A module as claimed in one of claims 1 to 15, **characterized in that** said actuating device comprises a reduction gear (15).

17. A module as claimed in one of the claims 1 to 16, **characterized in that** said supporting elements are wheels.

18. A module as claimed in one of the claims 1 to 16, **characterized in that** said supporting elements are skis.

19. A driving tilting suspension system for a wheeled vehicle comprising at least two wheels disposed on a common axle, said system being **characterized in that** it comprises a suspension tilting module as claimed in one of claims 1 to 17 and two wheels (2, 3) rotatably connected to said module.

20. A system as claimed in claim 19, **characterized in that** said system comprises at least two electric motors (4, 5) each mechanically coupled to one of said at least two wheels (2, 3), so as to drive said one wheel.

21. A system as claimed in claim 20, **characterized in that** said system comprises means for alternatively collecting electrical power from one of said two motors and for at least partially supplying the collected electrical power to the other one of said two motors so as to alternatively drive said two motors.

22. A system as claimed in claim 21, **characterized in that** the electrical power selected from one of said two motors and supplied to the other one of said two motors, essentially correspond to the electrical power generated by said motor.

23. A system as claimed in one of claims 21 and 22, **characterized in that** dissipating means are further provided for at least partially dissipating the electrical power alternatively

collected from one of said two motors, so that the electrical power transferred to the other one of said two motors is less than the electrical power collected.

24. A system as claimed in one of claims 21 to 23, **characterized in that** said motors are received inside the hubs of said wheels.

25. A system as claimed in claim 24, **characterized in that** said motors are mechanically coupled to said wheels through corresponding transmission means (15) adapted to act on corresponding driving axles mechanically connected to said wheels.

26. A system as claimed in claim 25, **characterized in that** said transmission means comprises transmission belts.

27. A system as claimed in claim 25, **characterized in that** said transmission means comprises transmission gearboxes.

28. A system as claimed in one of claims 21 to 27, **characterized in that** said means for alternatively collecting electrical power from one of said two motors and for supplying the collected electrical power to the other one of said two motors comprise at least two power electronic units (106,107), each of said at least power electronic units being electrically connected to one of said two motors.

29. A system as claimed in claim 28, **characterized in that** said at least two power electronic units are reciprocally connected to two electrical connections (108a, 108b) adapted to allow electrical power to be transferred between said two power electronic units.

30. A system as claimed in one of claims 28 to 29, **characterized in that** it further comprises a control unit (108) electrically connected to each of said power electronic units (106,107) and adapted to control the function of said power electronic units.

31. A system as claimed in one of claims 28 to 30, **characterized in that** it further comprises sensing means adapted to collect matter relating to the driving characteristics of the vehicle exploiting said system and to supply said data to said control unit.

32. An electrical module as claimed in claim 31, **characterized in that** said data comprise data relating to the behavior of said wheels.

33. A wheeled vehicle comprising at least two wheels (2, 3), **characterized in that** said vehicle is equipped with a driving tilting suspension system as claimed in one of claims 19 to 32.

34. A vehicle as claimed in claim 33, **characterized in that** said vehicle is a four wheeled vehicle comprising two front wheels and two rear wheels, and **in that** said vehicle comprises a rear and a front system as claimed in one of claims 19 to 32, with said rear wheels being rotatably connected to said module of said rear system and the front wheels being rotatably connected to the suspension module of said front system.

35. A vehicle as claimed in claim 33, **characterized in that** said vehicle is a four wheeled vehicle comprising two front wheels and two rear wheels, either the front wheels or the rear wheels being driven by a main engine, and **in that** the two wheels not driven by said main engine are rotatably connected to said module of said system.

36. A vehicle as claimed in claim 33, **characterized in that** said vehicle is a three wheeled vehicle.

37. A vehicle as claimed in claim 33 when appended to claims 20 to 32, **characterized in that** said at least two electric motors of said system also provide the traction torques for driving said two wheels.

38. A module for a snowmobile as claimed in claim 18, **characterized in that** said skis are rigidly connected to each other.

39. A module as claimed in claim 6 or 7, **characterized in that** the supporting elements are skis and the suspension arms are wishbone arms.

40. A module as claimed in any of the claims 8 to 14, **characterized in that** said supporting elements are skis which are rigidly linked to said upright elements (8,9) through two steering spindles (201, 202).

41. A snowmobile **characterized in that**

said snowmobile is equipped with a suspension tilting module as claimed in one of the claim 18 or 38 to 40.

42. A snowmobile as claimed in claim 41 **characterized in that** said skis are shaped skis.

43. A snowmobile as claimed in claim 41 **characterized in that** said skis are carving skis.

44. A snowmobile as claimed in claim 41 comprising a drive track **characterized in that** drive track has a round shape to improve the stability of the snowmobile.

45. A snowmobile as claimed in one of the claims 41 to 44 **characterized in that** the tilting of the snowmobile is activated by the movement of the driver's body.

46. A snowmobile as claimed in one of the claims 41 to 44 **characterized in that** the tilting can be locked at low speed or when said snowmobile is parking.

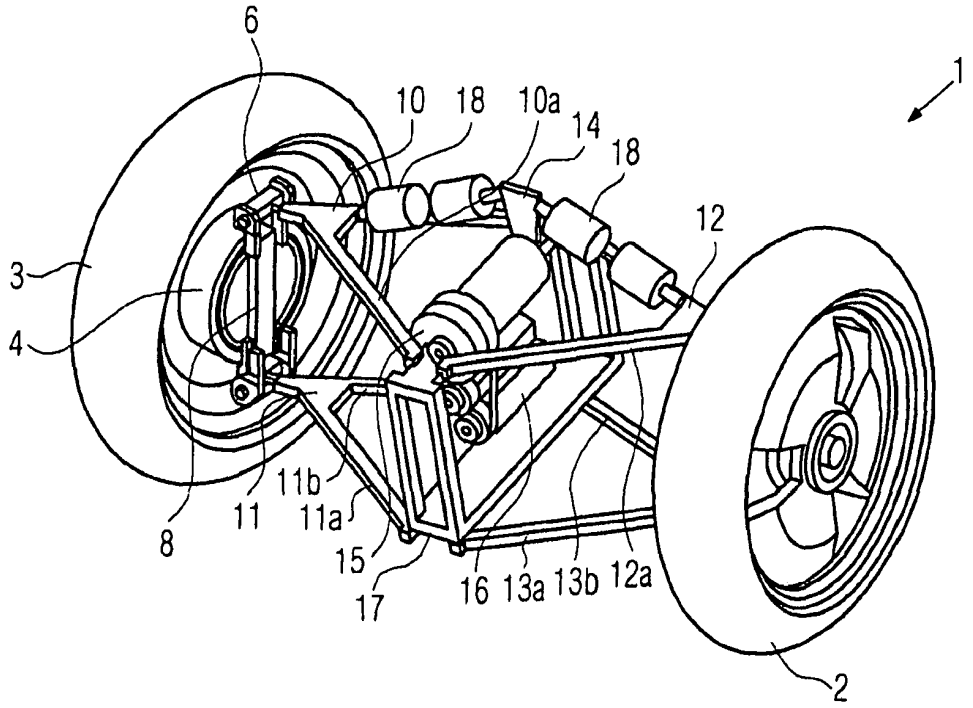

FIG. 1

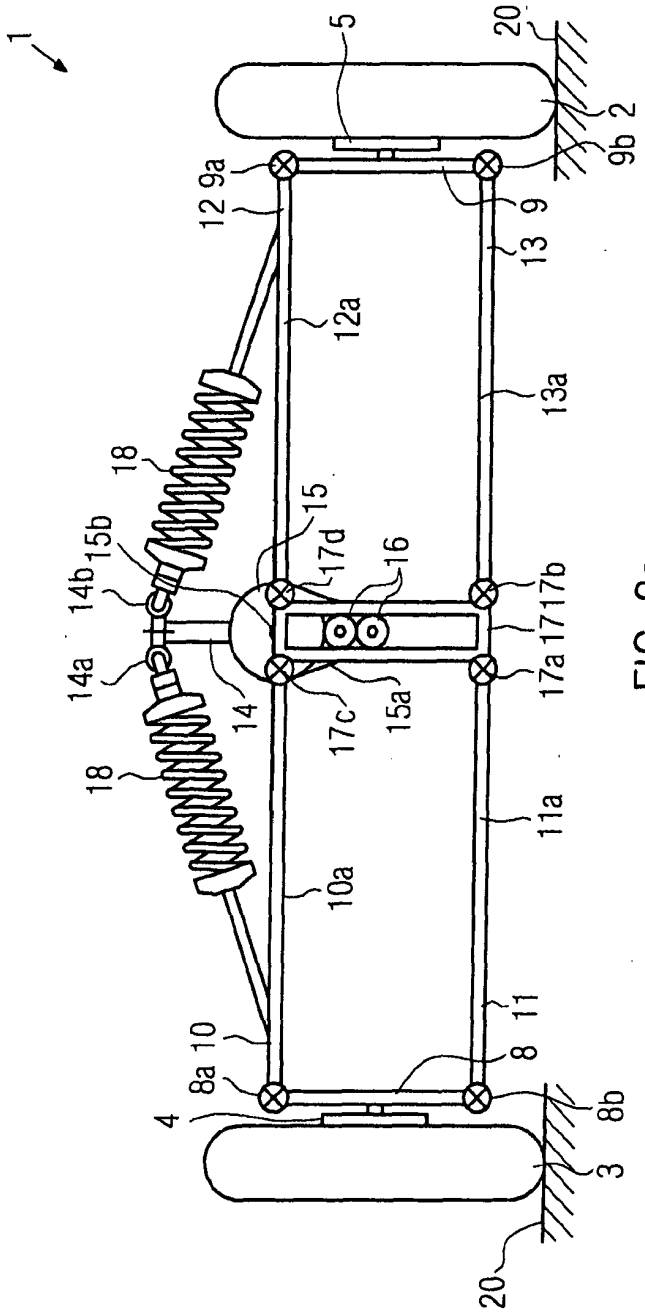
1
5
20
2
9b
9a
12
9
13
12a
13a
18
15
15b
17d
16
14b
17
17b
14a
14
17c
15a
17a
18
11a
10a
11
10
8
8a
4
8b
3
20

FIG. 2a

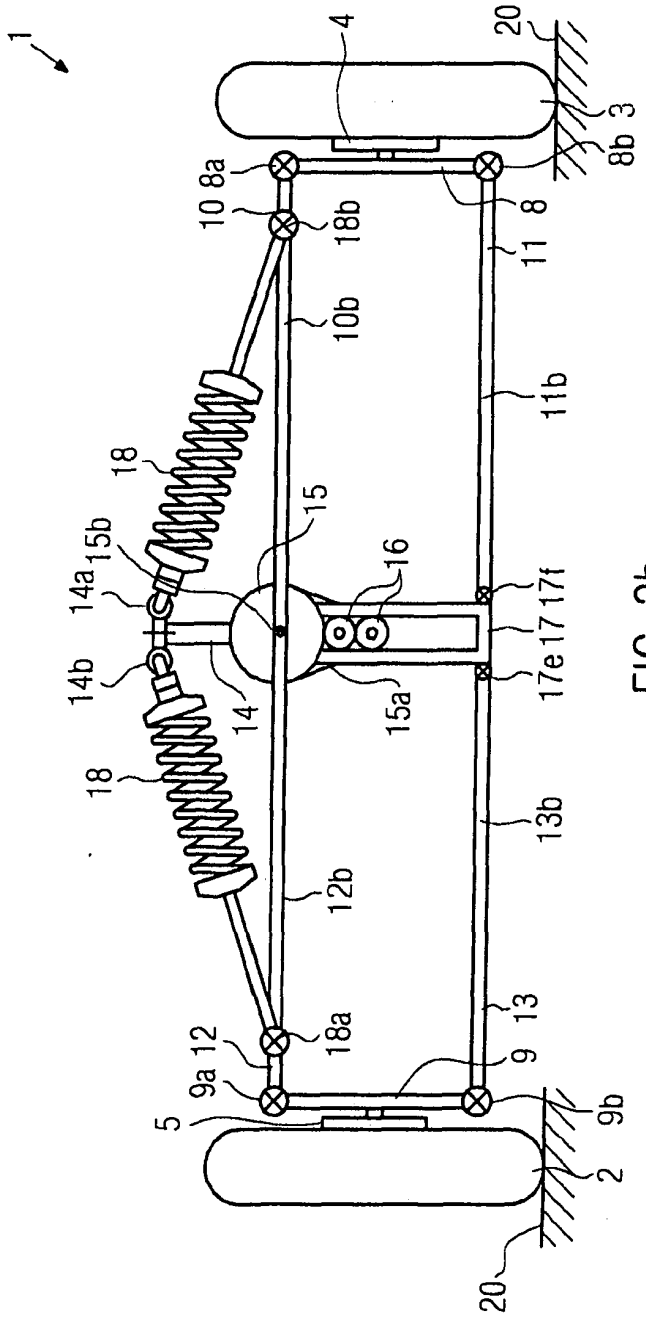
1
4
20
3
8b
8a
10
18b
8
11
10b
11b
18
15
15b
16
14a
17f
17
14b
17e
14
15a
18
13b
12b
18a
13
12
9
9a
5
9b
2
20

FIG. 2b

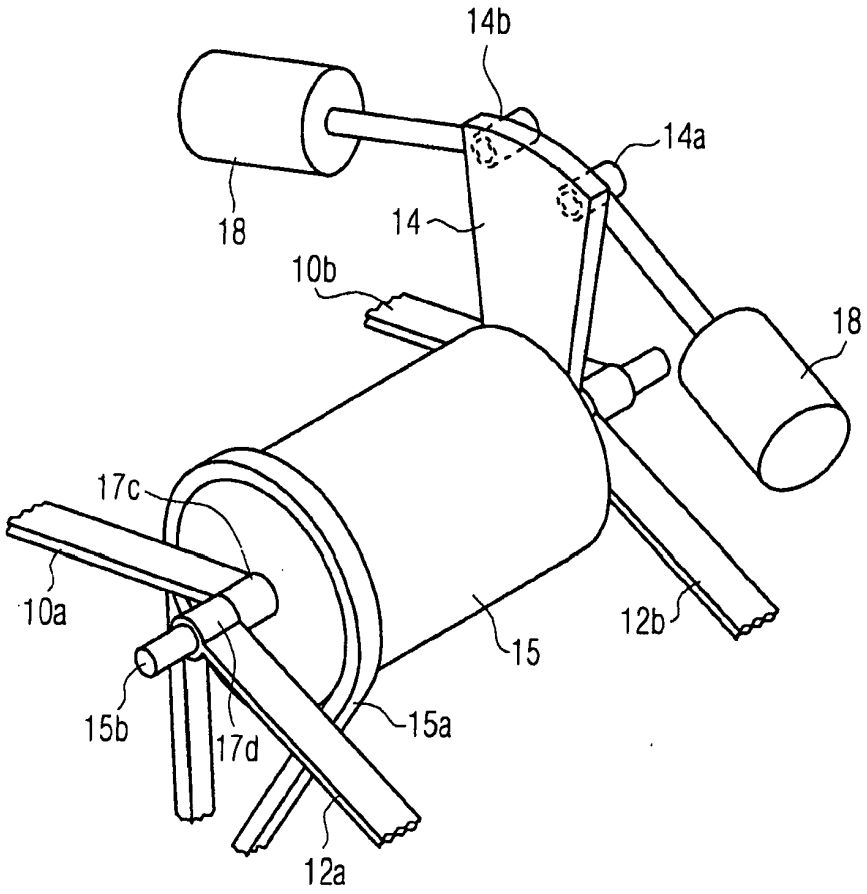

FIG. 3

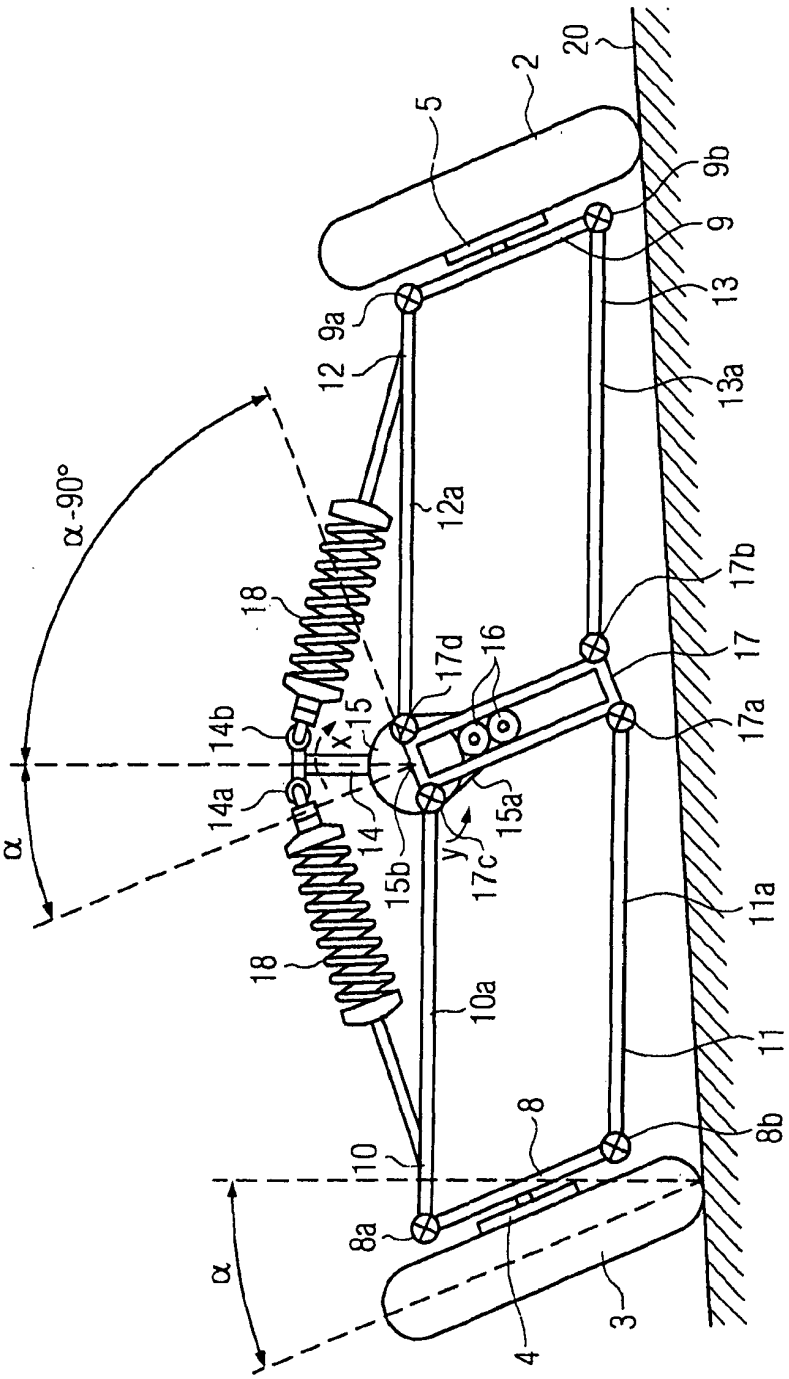
α-90°
α
α
2
3
4
5
8
8a
8b
9
9a
9b
10
10a
11
11a
12
12a
13
13a
14
14a
14b
15
15a
15b
16
17
17a
17b
17c
17d
18
18
20
x
y

FIG. 4a

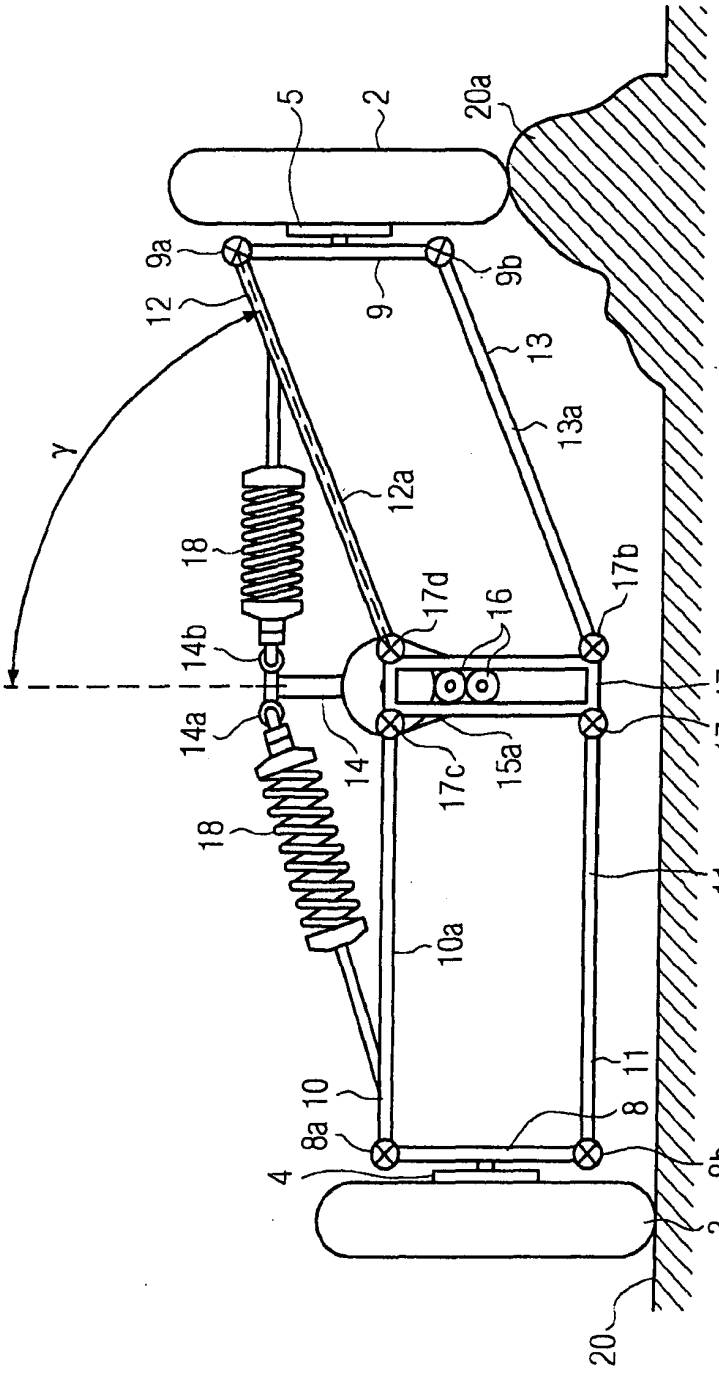
5
2
20a
9a
9b
12
9
13
13a
γ
12a
18
17d
16
17b
14b
14a
14
17c
15a
17a
17
18
11a
10a
11
8a
10
8
4
8b
3
20

FIG. 4b

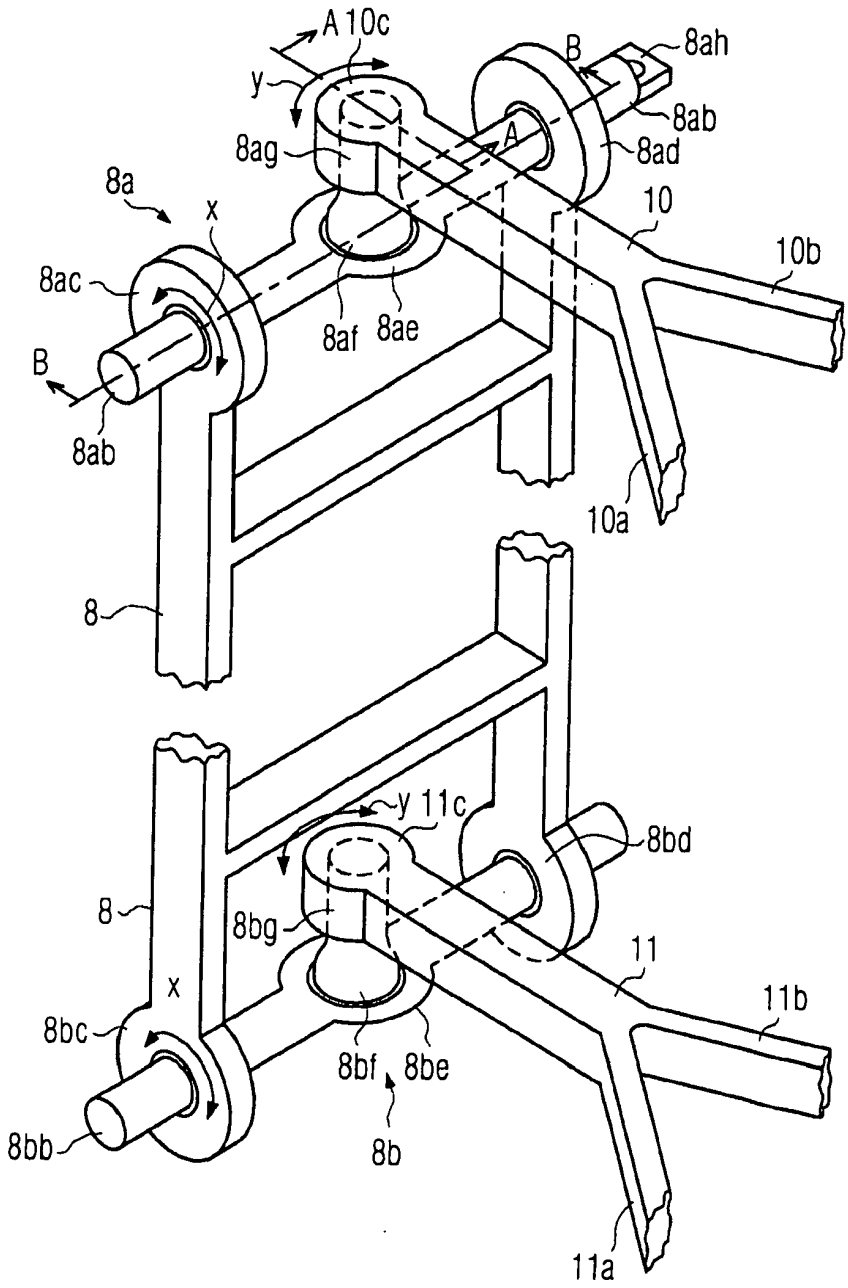
A 10c
y
8ag
8a
x
8ac
B
8ab
8af
8ae
B
8ah
8ab
A
8ad
10
10b
10a
8
y 11c
8bd
8
8bg
11
11b
x
8bc
8bf
8be
8bb
8b
11a

FIG. 5

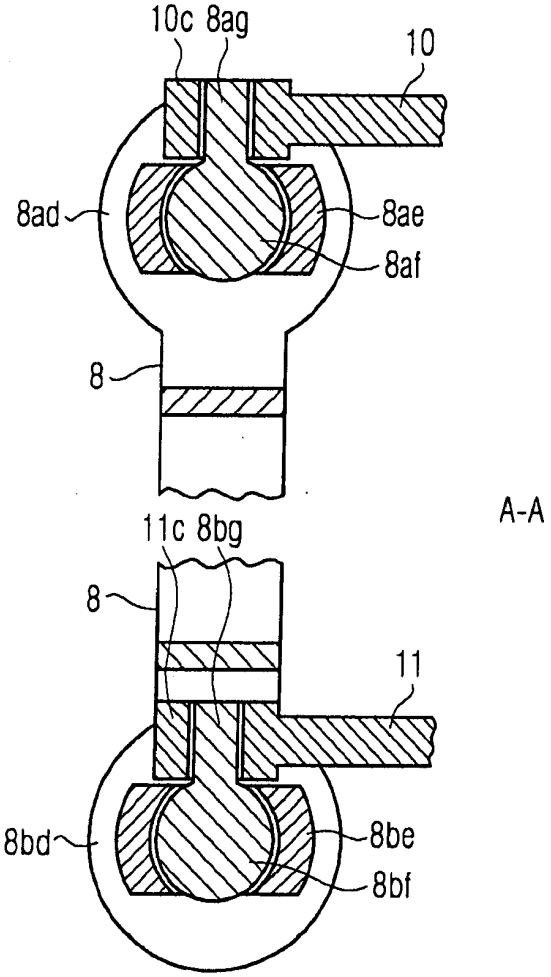

FIG. 5a

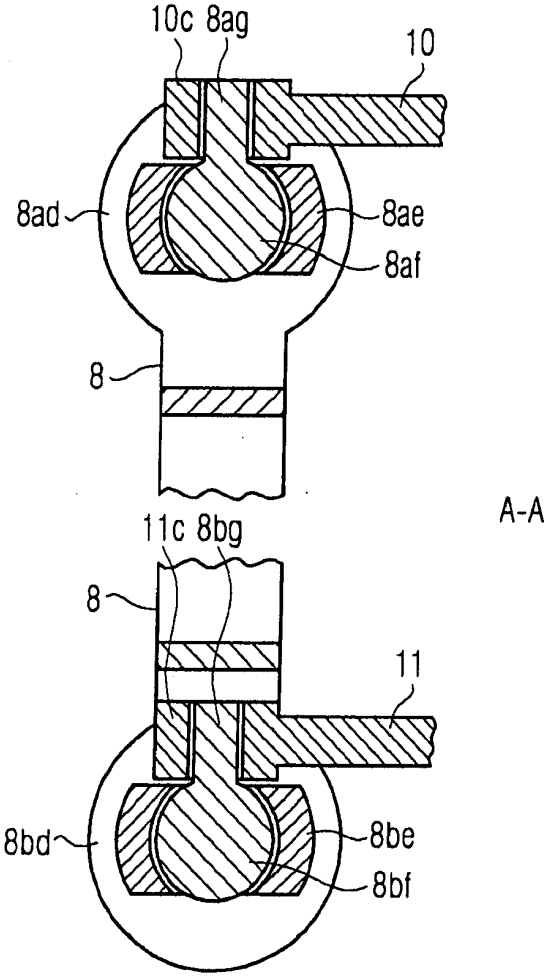

FIG. 5a

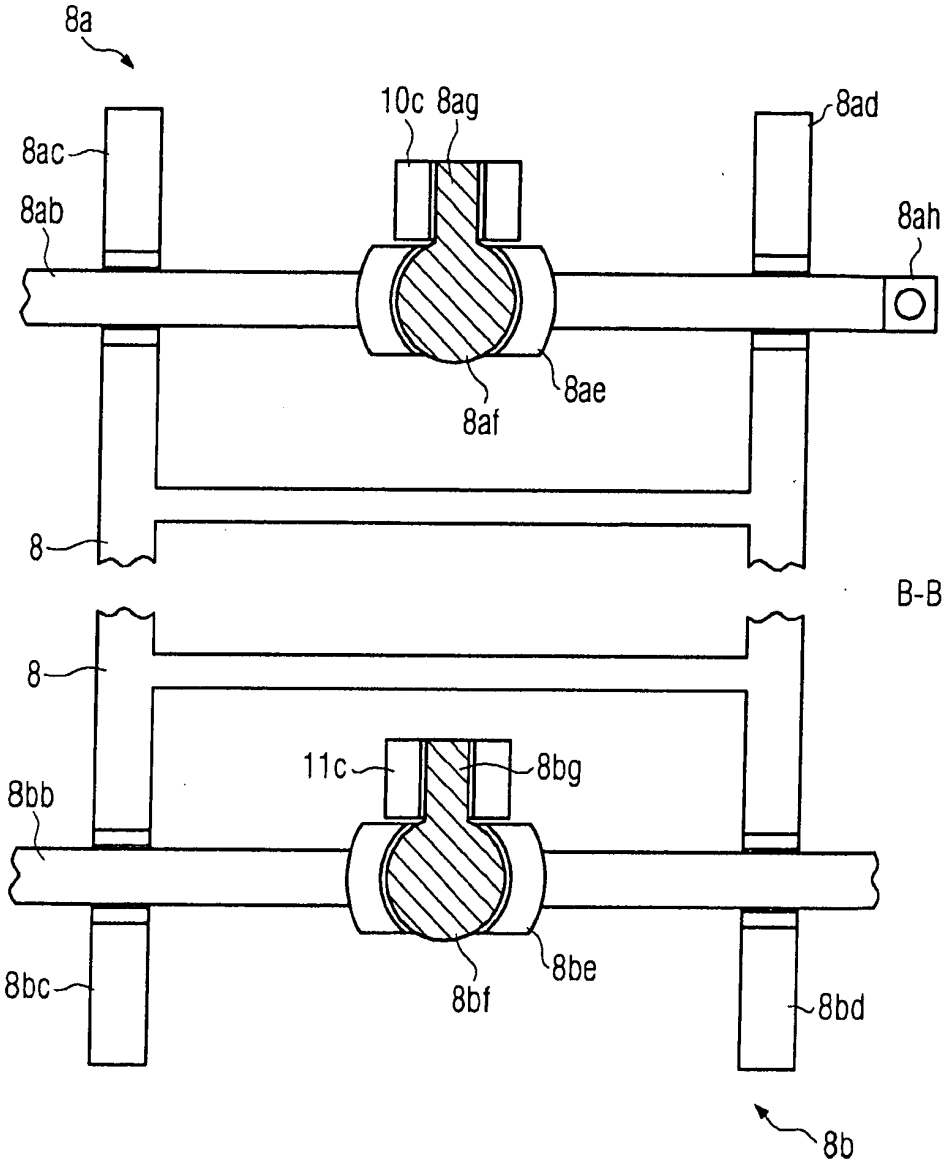
8a
10c
8ag
8ad
8ac
8ab
8ah
8ae
8af
8
B-B
8
11c
8bg
8bb
8be
8bf
8bc
8bd
8b

FIG. 5b

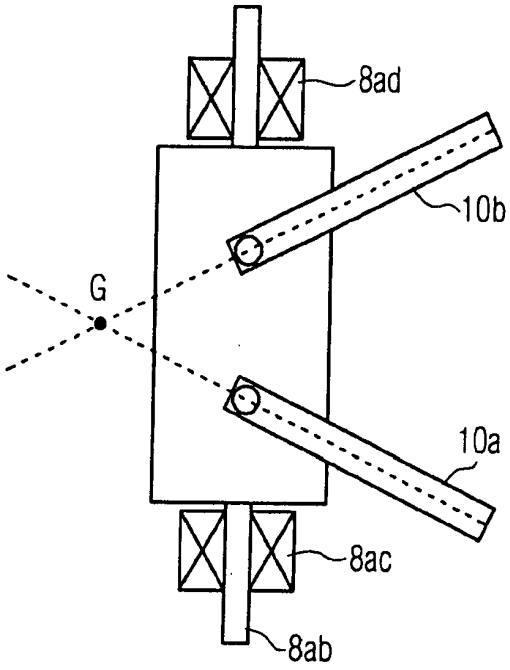

FIG. 6

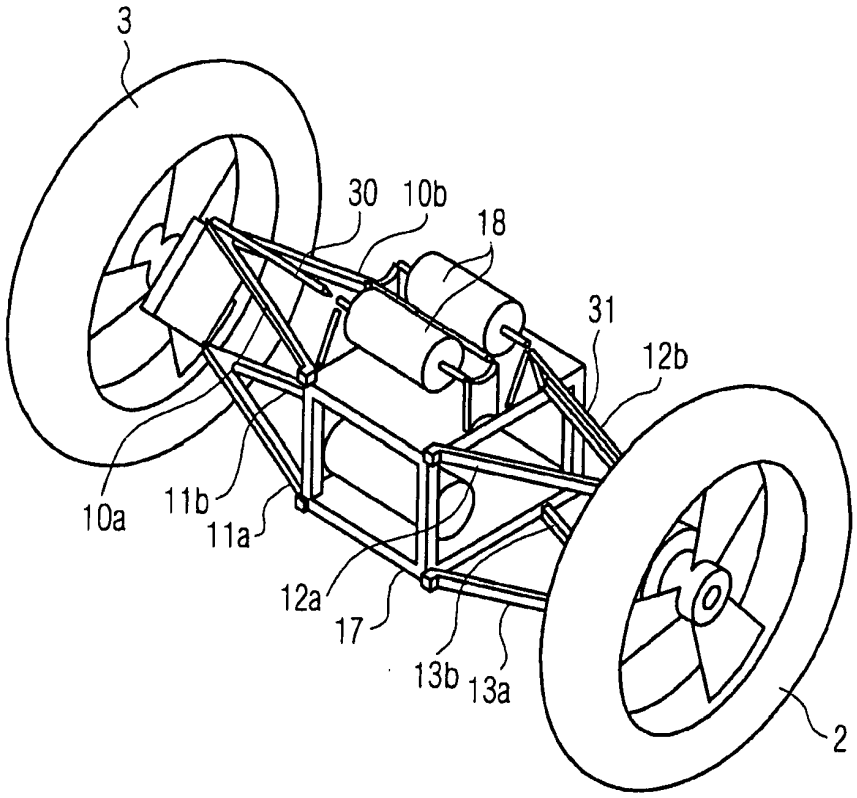

FIG. 7

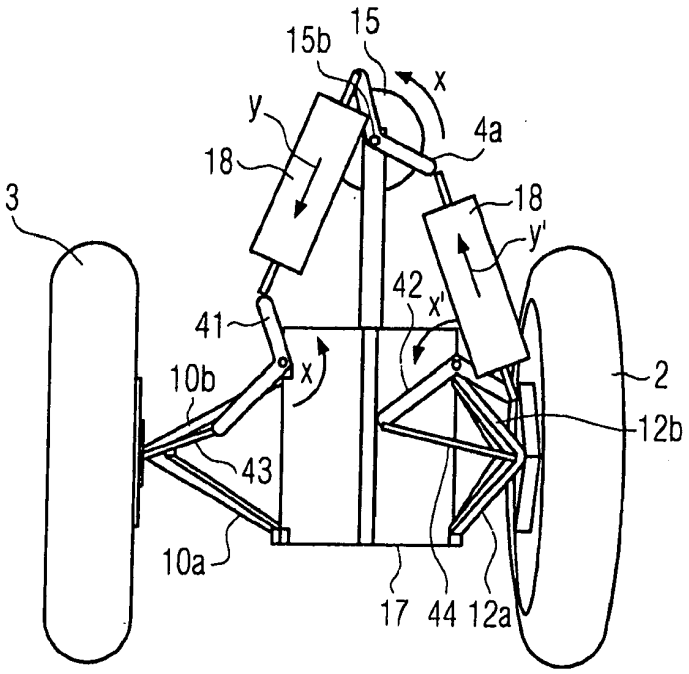

FIG. 8

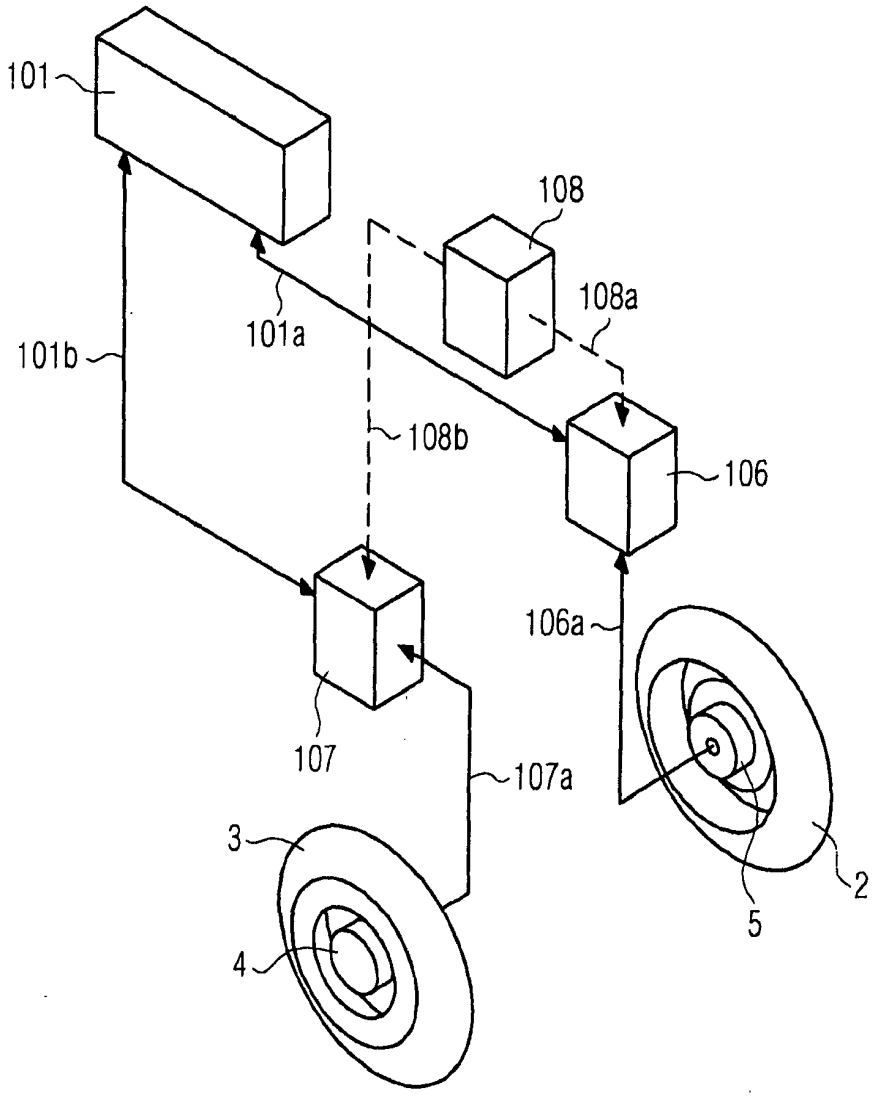

FIG. 9

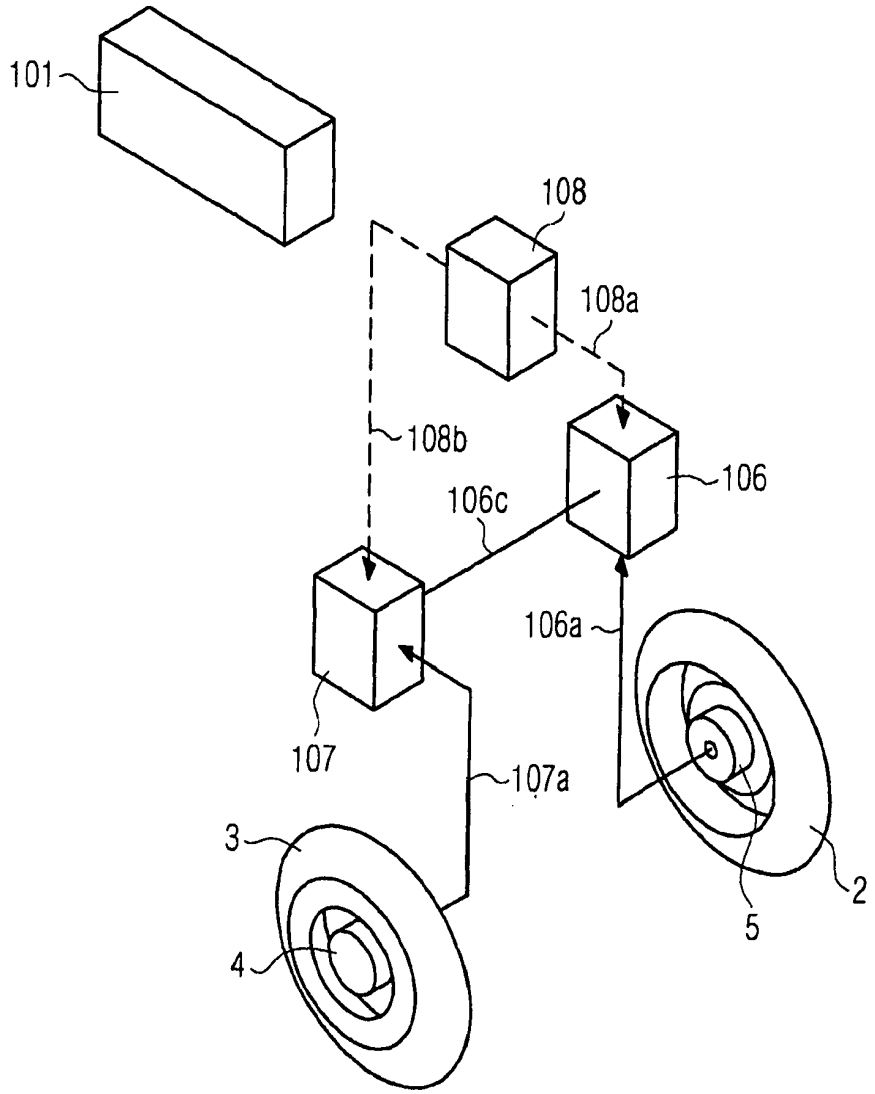

FIG. 10

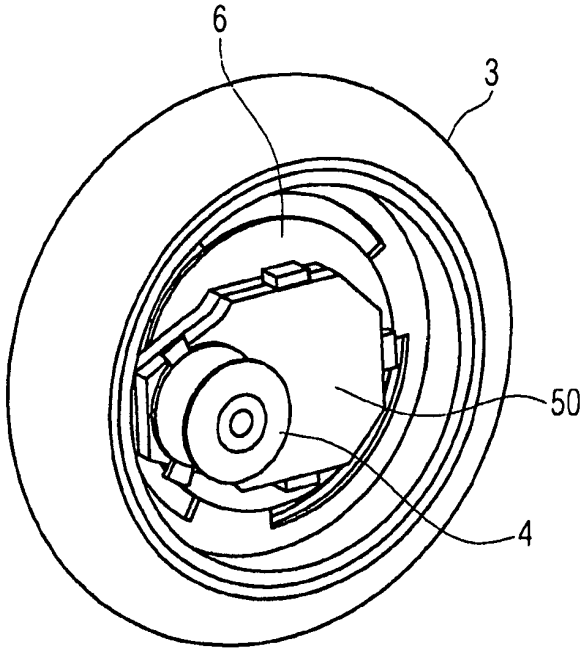

FIG. 11

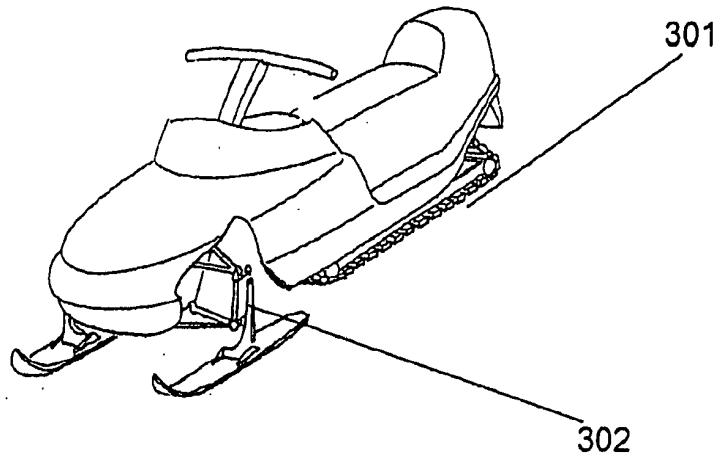

Fig. 12

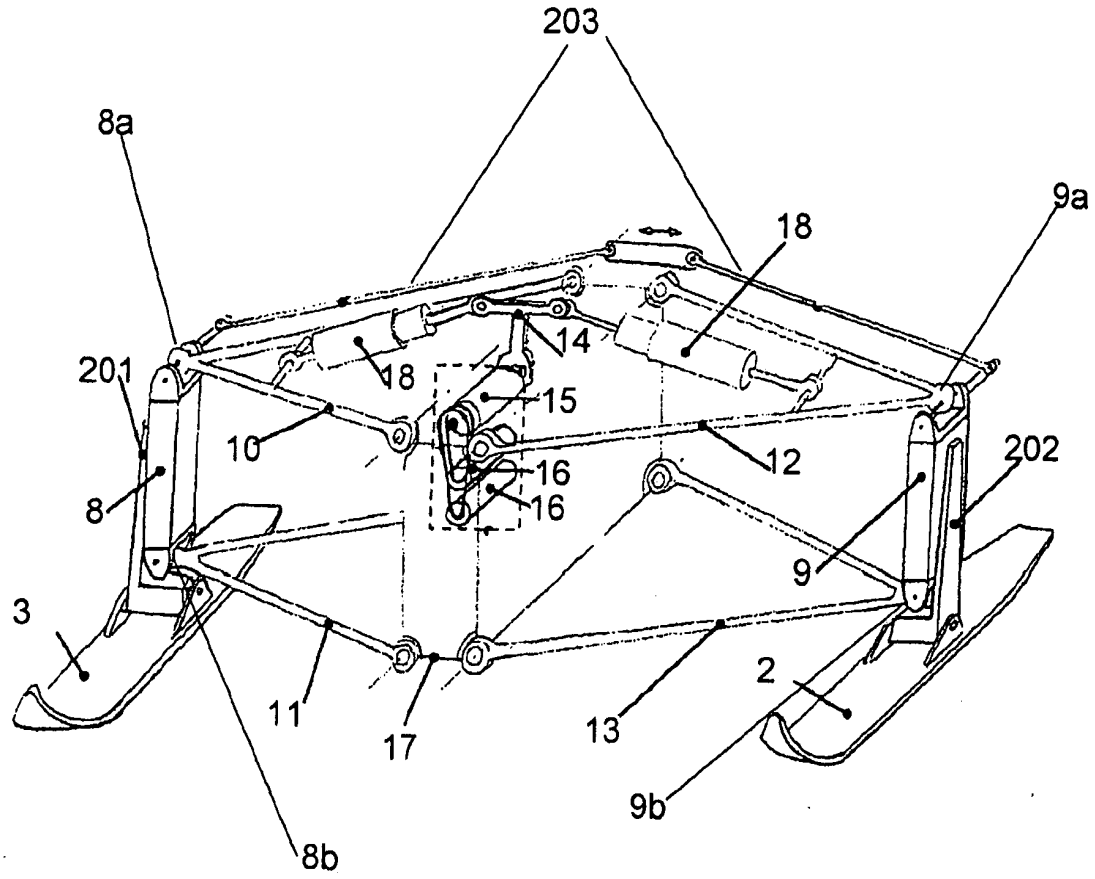

Fig. 13

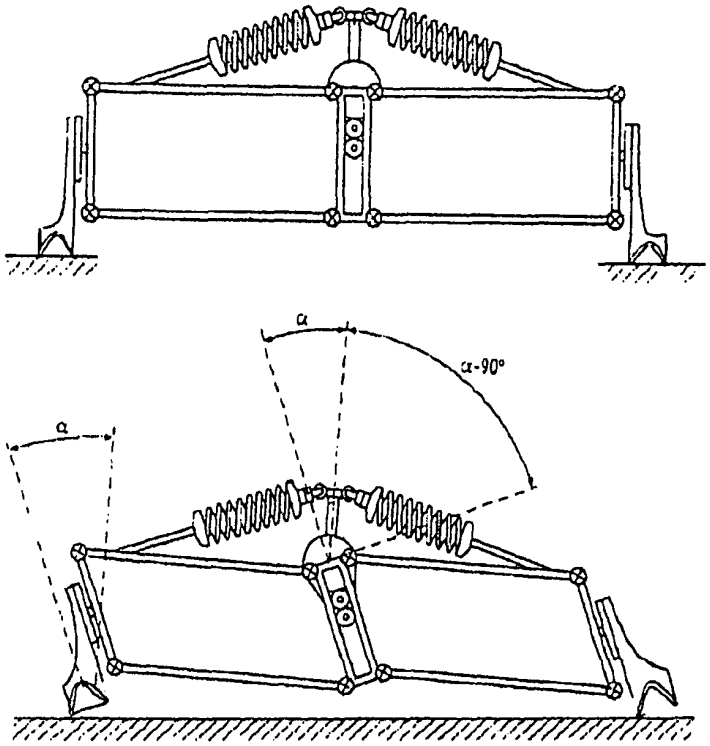

Fig. 14

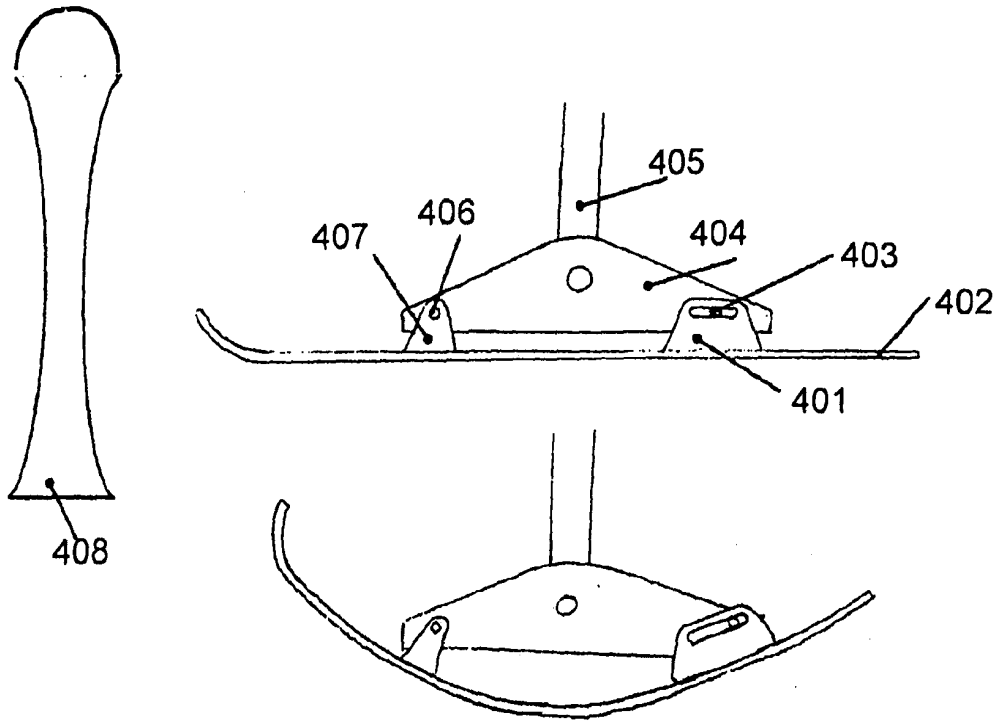

Fig. 15

European Patent Office

EUROPEAN SEARCH REPORT

Application Number
EP 06 02 6082

DOCUMENTS CONSIDERED TO BE RELEVANT

Category	Citation of document with indication, where appropriate, of relevant passages	Relevant to claim	CLASSIFICATION OF THE APPLICATION (IPC)
X Y	FR 2 745 757 A (DAIMLER BENZ AKTIENGESELLSCHAFT) 12 September 1997 (1997-09-12) * the whole document *	1,5-17, 19-40 18,41-46	INV. B60G17/015 B60G21/00
X	US 2 260 102 A (FRERET PAUL LEON) 21 October 1941 (1941-10-21) * column 7, line 27 - line 61; figures 13,14 *	1	
Y	US 2004/051262 A1 (YOUNG MELVIN R [US]) 18 March 2004 (2004-03-18) * the whole document *	18,41-46	

TECHNICAL FIELDS SEARCHED (IPC)

B60G

The present search report has been drawn up for all claims

Place of search	Date of completion of the search	Examiner
The Hague	22 March 2007	Savelon, Olivier

CATEGORY OF CITED DOCUMENTS

X : particularly relevant if taken alone
Y : particularly relevant if combined with another document of the same category
A : technological background
O : non-written disclosure
P : intermediate document

T : theory or principle underlying the invention
E : earlier patent document, but published on, or after the filing date
D : document cited in the application
L : document cited for other reasons

& : member of the same patent family, corresponding document

EPO FORM 1503 03.82 (P04C01)

ANNEX TO THE EUROPEAN SEARCH REPORT ON EUROPEAN PATENT APPLICATION NO. EP 06 02 6082

This annex lists the patent family members relating to the patent documents cited in the above-mentioned European search report. The members are as contained in the European Patent Office EDP file on
The European Patent Office is in no way liable for these particulars which are merely given for the purpose of information.

22-03-2007

Patent document cited in search report	Publication date	Patent family member(s)	Publication date
FR 2745757 A	12-09-1997	DE 19608578 A1	11-09-1997
		GB 2310838 A	10-09-1997
		IT RM970117 A1	08-09-1997
US 2260102 A	21-10-1941	FR 837939 A	23-02-1939
US 2004051262 A1	18-03-2004	NONE	

EPO FORM P0459

For more details about this annex : see Official Journal of the European Patent Office, No. 12/82

REFERENCES CITED IN THE DESCRIPTION

This list of references cited by the applicant is for the reader's convenience only. It does not form part of the European patent document. Even though great care has been taken in compiling the references, errors or omissions cannot be excluded and the EPO disclaims all liability in this regard.

Patent documents cited in the description

- US 6942050 B1 **[0008]**
- US 6467787 B1 **[0009]**
- WO 2006000841 A1 **[0010]**