POLITECNICO DI TORINO
Repository ISTITUZIONALE

Alternative SPICE Implementation of Circuit Uncertainties Based on Orthogonal Polynomials

Original
Alternative SPICE Implementation of Circuit Uncertainties Based on Orthogonal Polynomials / Manfredi, Paolo; Stievano, IGOR SIMONE; Canavero, Flavio. - STAMPA. - (2011), pp. 41-44. (Intervento presentato al convegno 20th IEEE Conference on Electrical Performance of Electronic Packaging and Systems (EPEPS) tenutosi a San Jose, CA (USA) nel Oct. 23-26, 2011) [10.1109/EPEPS.2011.6100181].

Availability:
This version is available at: 11583/2480780 since:

Publisher:
IEEE

Published
DOI:10.1109/EPEPS.2011.6100181

Terms of use:

This article is made available under terms and conditions as specified in the corresponding bibliographic description in the repository

Publisher copyright

(Article begins on next page)

18 April 2024

Alternative SPICE Implementation of Circuit Uncertainties Based on Orthogonal Polynomials

Paolo Manfredi, Igor S. Stievano, Flavio G. Canavero

Dipartimento di Elettronica, Politecnico di Torino
10129 Torino, Italy (igor.stievano@polito.it)

***Abstract*—The impact on circuit performance of parameters uncertainties due to possible tolerances or partial information on devices can be effectively evaluated by describing the resulting stochastic problem in terms of orthogonal polynomial expansions of electrical parameters and of circuit voltages and currents. This contribution formalizes a rule for the construction of an augmented instance of the original circuit, that provides a systematic solution approach for the unknown coefficients of the expanded electrical variables. The use of SPICE as a solution engine of the augmented circuit is straightforward, thus providing a convenient and efficient alternative to the conventional approach SPICE uses for uncertainty analysis. An application example involving the stochastic simulation of a digital link with variable substrate parameters demonstrates the potential of the proposed approach.**

***Index Terms*—Circuit modeling, Polynomial chaos, Circuit Simulation, Transmission-lines, Stochastic analysis, Tolerance analysis, Uncertainty.**

I. Introduction

In recent years, simulation and verification tools have been consolidated as key resources for the design of complex electronics equipments. They are used in the early design phase to assess systems performance for discovering and correcting possible problems and malfunctioning and thus avoiding expensive re-fabrication. For such an assessment, the availability of partial models of devices or the uncertainties due to the fabrication process or operating temperature unavoidably impacts on the accuracy of the prediction of sensitive effects like crosstalk or noise margins. Owing to this, methods and tools for the simulation of a circuit with the inclusion of parameters variability are highly desirable.

The typical resource for collecting quantitative information on the statistical behavior of the circuit response is based on the well-known Monte Carlo (MC) method that is possibly combined with techniques for the optimal selection of the experiments, i.e., the subset of model parameters in the design space. Such methods, however, are computationally expensive since they require a large number of simulations, thus limiting their application to the analysis of complex realistic structures.

Recently, an effective solution overcoming the previous limitation and based on the so-called polynomial chaos (PC) theory has been proposed [1], [2]. The idea underlying this technique is the spectral expansion of a stochastic function (intended as a given function of a random variable) in terms of a series of orthogonal polynomials. In the framework of circuit simulation, this method has been successfully applied to the classical modified nodal analysis (MNA) tool for the prediction of the stochastic behavior of lumped circuits with uncertain parameters [3]. Recently, it has also been extended to the modeling of long distributed interconnects described by transmission-line equations with the uncertainties in the electrical or geometrical parameters of the structure [4] .

In this paper, the original contribution is twofold: (i) further demonstrate the feasibility, flexibility and strength of this methodology for the stochastic analysis of a dynamical circuit consisting of both lumped and distributed elements, and (ii) compute the stochastic time-domain or frequency-domain response of a circuit by means of standard tools for the circuit analysis as SPICE, via a single simulation of an augmented network. For the latter point, a simple topological rule for the automatic generation of the augmented net is derived.

A realistic application example involving a high-speed data link with uncertainties in the substrate parameters is considered in Sec. IV.

II. Polynomial Chaos overview

This section provides a brief overview of the PC technique with specific emphasis on circuits. In order to illustrate the method, we refer to a simple yet representative example of a capacitor with the capacitance C depending on a random variable ξ. The above random quantity represents the effects of the variability of the element parameter due to external effects like the temperature or process technology.

PC theory provides a tool for the approximation of the function $C(\xi)$ by means of the following truncated series:

$$C(\xi) = \sum_{k=0}^{P} C_k \cdot \phi_k(\xi), \tag{1}$$

where $\{\phi_k\}$ are suitable orthogonal polynomials expressed in terms of the random variable ξ. The above expression is defined by the class of the orthogonal bases, by the number of terms P (limited to the range $2 \div 10$ for practical applications) and by the expansion coefficients C_k. The choice of the orthogonal bases relies on the distribution of the random variables being considered. Temperature variations as well as the uncertainties arising from fabrication tolerances turn out to be properly characterized in terms of Gaussian variability.

Therefore, in this case, the most appropriate orthogonal functions for the expansion (1) are the Hermite polynomials, the first three being $\phi_0 = 1$, $\phi_1 = \xi$ and $\phi_2 = (\xi^2 - 1)$, where ξ is the standard normal random variable, with zero mean and unit standard deviation.

The orthogonality property of Hermite polynomials is expressed by

$$< \phi_k, \phi_j >=< \phi_k, \phi_k > \delta_{kj}, \tag{2}$$

where δ_{kj} is the Kronecker delta and $< \cdot, \cdot >$ denotes the inner product in the Hilbert space of the variable ξ with Gaussian weighting function, i.e.,

$$\begin{cases} < \phi_k(\xi), \phi_j(\xi) >= \displaystyle\int_{-\infty}^{+\infty} \phi_k(\xi)\phi_j(\xi)W(\xi)d\xi \\ W(\xi) = \exp(-\xi^2/2)/(\sqrt{2\pi}). \end{cases} \tag{3}$$

With the above definitions, the expansion coefficients C_k of (1) are computed via the projection of C onto the orthogonal components ϕ_k, i.e., $C_k =< C(\xi), \phi_k(\xi) > / < \phi_k^2(\xi) >$.

The above overview is limited to the characteristic of a circuit element for conciseness only. However, The PC theory is general and can be effectively used to represent the stochastic response of a dynamical circuit, as shown in the next Section. For a comprehensive and formal discussion of PC theory, with the extension to multiple variables, the reader is referred to [1], [2] and references therein.

III. Stochastic SPICE simulation

This section outlines the procedure for the analysis of a dynamical circuit that possibly includes circuit elements with uncertain parameters via the proposed method and standard tools for circuit simulation.

A. Lumped dynamical circuits

For the sake of simplicity, the discussion is based on the example of Fig. 1, where the variability is provided by the two-terminal element $Y(s, \xi) = sC(\xi)$, where the capacitance is a known nonlinear function of the random variable ξ.

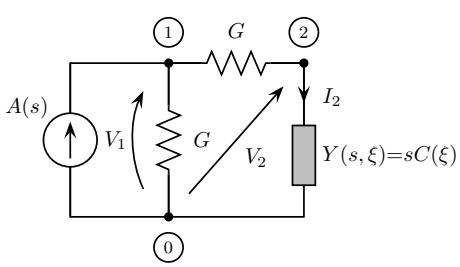

Fig. 1. Tutorial example, in the Laplace domain, for the illustration of the proposed method.

The procedure for collecting the statistical behavior of the circuit of Fig. 1 follows.

Step 1. Expand the characteristics of the circuit elements with uncertainty via the series (1). For the example of Fig. 1 and a first order expansion (i.e., P=1), the admittance $Y(s, \xi)$ becomes:

$$Y(s, \xi) = sC(\xi) = s\left(C_0\phi_0(\xi) + C_1\phi_1(\xi)\right) \tag{4}$$

Step 2. Assume that the stochastic response of the circuit can be decomposed in terms of Hermite polynomials with the same order of (4). As an example, the nodal voltage $V_2(s)$ writes:

$$V_2(s) = V_{20}(s)\phi_0(\xi) + V_{21}(s)\phi_1(\xi) \tag{5}$$

where V_{20} and V_{21} are the new unknowns of the problem. Similar expansions can be assumed for all the electrical variables.

Step 3. Rewrite the characteristics of both the known and the uncertain circuit elements in terms of the expanded variables and carry out their projection onto the orthogonal basis via (3). As an example, for the case of the admittance $Y(s, \xi)$, the characteristic equation $I_2(s) = sC(\xi)V_2(s)$ becomes:

$$\begin{aligned} I_{20}\phi_0(\xi) + I_{21}\phi_1(\xi) = s(C_0\phi_0(\xi) + C_1\phi_1(\xi))\cdot \\ \cdot (V_{20}\phi_0(\xi) + V_{21}\phi_0(\xi)) \end{aligned} \tag{6}$$

where the dependence of unknowns on the Laplace variable s is neglected for notational convenience. Projection of (6) on the first two Hermite polynomials writes:

$$\begin{aligned} I_{20}<\phi_0, \phi_j> + I_{21}<\phi_1, \phi_j> = s(C_0<\phi_0^2, \phi_j>V_{20}+ \\ + C_0<\phi_0\phi_1, \phi_j>V_{21} + \ldots), \quad j = 0, 1. \end{aligned} \tag{7}$$

By means of the orthogonality relation of the Hermite polynomials for the computation of the inner products $<\phi_k, \phi_j>$ and $<\phi_k\phi_j, \phi_l>$, the above set of equations leads to the following augmented system, where the random vector ξ does not appear, due to the integration operation:

$$\begin{bmatrix} I_{20} \\ I_{21} \end{bmatrix} = s\mathbf{C}\begin{bmatrix} V_{20} \\ V_{21} \end{bmatrix} = s\begin{bmatrix} C_0 & C_1 \\ C_1 & C_0 \end{bmatrix}\begin{bmatrix} V_{20} \\ V_{21} \end{bmatrix} \tag{8}$$

It is worth noticing that equation (8) defines the characteristic of an augmented multiport circuit element and that the voltage and current expansion coeffcients $I_{20}, V_{20}, \ldots$ play the role of the new electrical variables of an augmented circuit.

Similar relations can be derived for the circuit elements that are supposed not to vary, e.g., the conductance G and the ideal current source $A(s)$ in this example. The only difference is that the electrical variables are still expanded as in (5), but the non-varying parameters maintain only the $k = 0$ term of expansion (1). The augmented system is then characterized by a diagonal matrix of coefficients, as follows:

$$\begin{cases} \mathbf{I} = \mathbf{G}\mathbf{V} = \begin{bmatrix} G & 0 \\ 0 & G \end{bmatrix}\mathbf{V} \\ \mathbf{I} = \begin{bmatrix} A(s) \\ 0 \end{bmatrix} \end{cases} \tag{9}$$

where the voltage and current variables are assumed with associate reference directions. Evidently, (9) provides a clear and unambiguous rule to build the augmented admittance matrix of a known two-terminal element; for example, the conductance G generates a matrix $\mathrm{diag}(G, G, \ldots)$. Also, we observe that each independent source (either voltage or current) generates a vector with the first non null element only.

From a different perspective, the above discussion suggests to compute the stochastic response of a dynamical circuit via the deterministic simulation of an augmented circuit built by properly connecting the multiport equivalents of all the circuit elements. For the illustration example of this study, the resulting circuit is shown in Fig. 2, where it can be clearly observed that each node n expands into P nodes nk $(k = 0, 1, \ldots, P)$ and each element is connected according to (8) or (9).

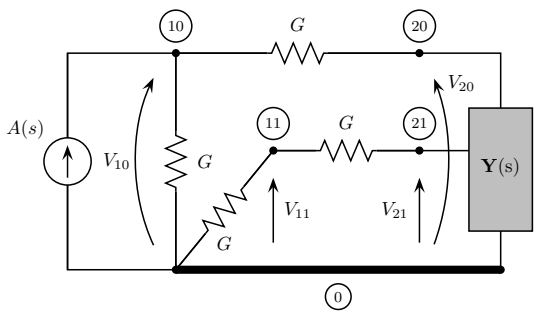

Fig. 2. Augmented circuit for the stochastic analysis of the example of Fig. 1.

Also, from the constitutive relations derived above, it can be easily verified the following practical topological rule for the generation of the augmented network: (i) expand the characteristics of the circuit elements with uncertainty according to *Step 1* above and create the fully coupled multiport equivalent of the elements; (ii) according to the definition of the new auxiliary nodal voltages of *Step 2*, create an augmented network by replicating the structure of the connections of the passive components. On the other hand, only one replica of the ideal sources of the original circuit (e.g., the ideal current generator of Fig. 1) is included in the augmented network, with terminals that are either the reference node or the $0{-}th$ nodal voltages (see the illustrative example of Fig. 2). Even if the above procedure has been developed for the case of a network of two-port elements, its extension to arbitrary circuits can be easily derived.

Finally, either the frequency-domain or the time-domain solution of the augmented circuit can be obtained by means of any available tool of circuit analysis. Once the unknown voltages and currents are computed, the quantitative information on the spreading of circuit responses can be readily obtained from the analytical expression of the unknowns. As an example, the frequency-domain solution of the magnitude of voltage V_2 of (5), leads to $|V_2(j\omega)| = |V_{20}(j\omega)\phi_0(\xi) + V_{21}(j\omega)\phi_1(\xi)|$. The above relation, that turns out to be a known nonlinear function of the random vector ξ, can be used to compute the PDF of $|V_2(j\omega)|$ via repeated numerical evaluations or analytical formulas [5].

It is also relevant to remark that the proposed solution, based on a single simulation of an augmented circuit, is much more efficient than Monte Carlo analysis, which would require a large number of simulations (on the order of ten thousands) of the original circuit with different samples of the uncertain parameters.

B. Distributed interconnects

This methodology is applicable also to multiconductor transmission lines, whose extended model can be obtained accordingly to what is done for the case of lumped circuits, via the orthogonal projection of the well-known telegraph equations. The above projection leads to an extended set of multiconductor transmission line equations, with augmented per-unit-length matrices that are $(P{+}1)$ larger than the original ones. Readers are referred to [4] for additional details on the model derivation.

IV. Application

This section provides an example in which the PC technique is applied to the time-domain analysis of the structure depicted in Fig. 3, consisting of two identical segments of coupled microstrips linked by a connector represented by a simple LC equivalent. The cross-section of the microstrip lines is shown in Fig. 4, where $w = 100\,\mu$m, $s = 80\,\mu$m, $h = 60\,\mu$m, $t_k = 35\,\mu$m, $\varepsilon_r = 3.7$. The values of the connector parameters are $L = 3$ nH and $C = 0.4$ pF. The values of the source resistors and far-end capacitors are $R_S = 35\,\Omega$ and $C_L = 10\,$pF, respectively.

The variability is provided by the substrate parameters, i.e., h and ε_r, which are considered as random variables with a relative standard deviation of 10%. The approximate relations given in [6] were used to compute the PC expansion of the p.u.l. parameters. The voltage source $e(t)$ is a trapezoidal wave with amplitude of 1 V, transition times of 100 ps, duty cycle 50% and total period of 20 ns.

Figure 5 shows the voltage transmitted to the end of the interconnect (v_{L1}) as well as the voltage coupled to the adjacent line (v_{L2}). In both panels, the black thick line represents the response of the structure for the nominal values of its parameters, while the thinner black lines indicate the limits of the 3σ bound (σ being the standard deviation) determined from the results of the proposed technique. The figure also includes a number of responses (see the gray lines) obtained via a limited set of MC simulations.

All the simulations are carried out by means of SPICE and the transmission line models defined by the generalization of the Branin's equivalent. As far as the MC simulations are concerned, a repeated analysis is performed by generating a different transmission-line model for each sample. The predictions obtained via the proposed PC method, are computed by means of a single SPICE simulation of the augmented version of the circuit of Fig. 3. The augmented net is generated according to the guidelines outlined in Sec. III. Figure 5 clearly shows that the parameter variations lead to a spread in the

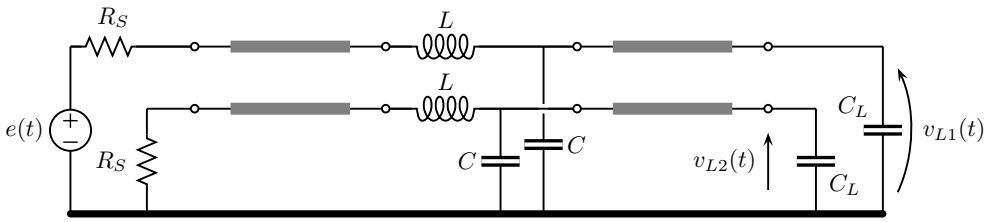

Fig. 3. Electrical schematic of a PCB high-speed link with uncertainties on the substrate parameters.

transient response that is well predicted by the estimated 3σ limit in both cases.

Often the knowledge of the standard deviation represents a limited information, since the quantitative information about how the values are distributed is missing. Nonetheless, from the analytical PC model we can also obtain the probability density function of the system responses. Figure 6 compares the PDFs of $v_{L2}(t)$ computed at two different time points by means of the PC technique with those generated with 20,000 MC simulations. The selected time points correspond to the dashed vertical lines shown in Fig. 5.

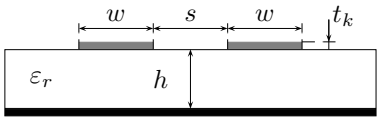

Fig. 4. Cross-section of the coupled lines of the application example (Fig. 3).

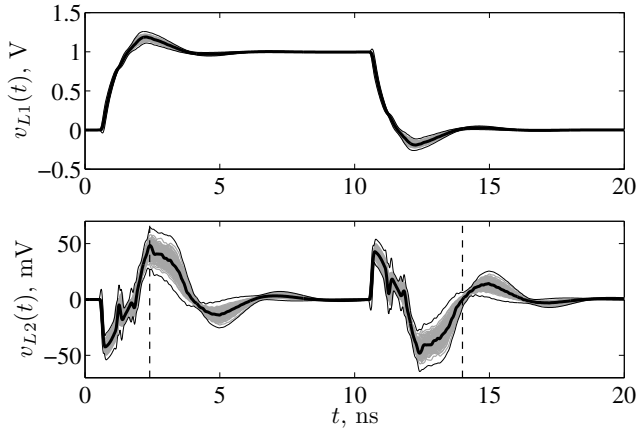

Fig. 5. $v_{L1}(t)$ (top panel) and $v_{L2}(t)$ (bottom panel). Solid black thick line: nominal response; solid black thin lines: 3σ limits of the second-order polynomial chaos expansion; gray lines: a sample of responses obtained by means of the MC method (limited to 100 curves, for graph readability).

The good agreement between the PDFs obtained from the PC model and the corresponding set of MC simulations confirms the potential of the proposed method. It is also clear from this example that a second-order PC expansion is already accurate enough to capture the dominant statistical information of the system response. In addition, for the application of Fig. 3, the speed-up introduced by the proposed method w.r.t. conventional MC analysis is 940x.

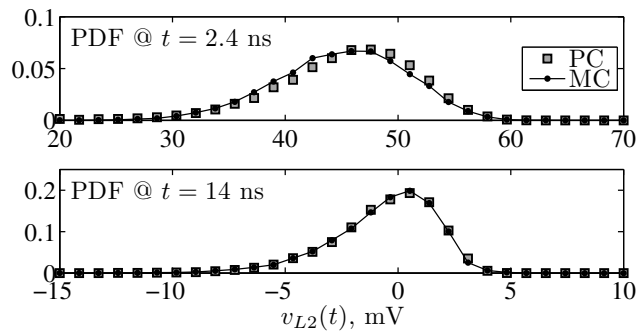

Fig. 6. Probability density function of $v_{L2}(t)$ computed at different times. Of the two distributions, the one marked MC refers to 20,000 MC simulations, while the one marked PC refers to the response obtained via the PC expansion.

V. Conclusions

This paper addresses the stochastic analysis of a complex dynamical circuit that includes interconnects with uncertain parameters by means of a SPICE-based tool. The proposed approach provides a simple yet effective solution based on the simulation of an augmented deterministic circuit that is obtained by suitably connecting the known circuit elements to extended multiport equivalents of the uncertain elements. The augmented multiports are obtained via the projection of their constitutive relations in terms of Hermite orthogonal polynomials within the general framework of PC theory. The method offers comparable accuracy and improved efficiency with respect to alternate methods based on Monte Carlo simulations. A realistic application example involving an high-speed PCB link is used to demonstrate the feasibility and strength of the approach.

References

[1] R. G. Ghanen and P. D. Spanos, *Stochastic finite elements. A spectral approach,* Springer-Verlag, 1991.

[2] D. Xiu and G. E. Karniadakis, "The Wiener-Askey polynomial chaos for stochastic differential equations," *SIAM, Journal of Sci. Computation*, Vol. 24, No. 2, pp. 619–622, 2002.

[3] K. Strunz and Q. Su, "Stochastic formulation of SPICE-type electronic circuit simulation with polynomial chaos," *ACM Trans. Modeling and Computer Simulation*, Vol. 18, No. 4, pp. 15–23, Sep. 2008.

[4] I. S. Stievano, P. Manfredi and F. G. Canavero, "Parameters variability effects on multiconductor interconnects via Hermite polynomial chaos," *IEEE Trans. Comp. Packg. and Manuf. Technol.*, Vol. 1, No. 8, pp. 1234–1239, Aug. 2011.

[5] A. Papoulis, *Probability, random variables and stochastic processes,* 3rd edition, McGraw-Hill, 1991.

[6] B. C. Wadell, *Transmission line design handbook,* Artech House, 1991.