POLITECNICO DI TORINO
Repository ISTITUZIONALE

Influence of scour of foundations on the dynamic response of an existing bridge

Original
Influence of scour of foundations on the dynamic response of an existing bridge / Foti, S., Sabia, D.. - In: JOURNAL OF BRIDGE ENGINEERING. - ISSN 1084-0702. - STAMPA. - 16:2(2011), pp. 295-304. [10.1061/(ASCE)BE.1943-5592.0000146]

Availability:
This version is available at: 11583/2370434 since:

Publisher:
ASCE

Published
DOI:10.1061/(ASCE)BE.1943-5592.0000146

Terms of use:

This article is made available under terms and conditions as specified in the corresponding bibliographic description in the repository

Publisher copyright

(Article begins on next page)

28 November 2026

Post-print (i.e. final draft post-refereeing) version of an article published on JOURNAL OF BRIDGE ENGINEERING, vol. 16 n. 2, pp. 295-304, ISSN 1084-0702
Beyond the journal formatting, please not that there could be minor changes from this document to the final published version, accessible from http://dx.doi.org/10.1061/(ASCE)BE.1943-5592.0000146
The present version is accessible on PORTO, the Open Access Repository of Politecnico di Torino, in compliance with the Publisher's copyright policy as reported in the Sherpa-Romeo website.

INFLUENCE OF SCOUR OF FOUNDATIONS ON THE DYNAMIC RESPONSE OF AN EXISTING BRIDGE

S. Foti[1], D. Sabia[2]

[1]Assistant Professor, Dept. of Structural and Geotechnical Eng., Politecnico di Torino, 10129 Italy; Tel: +39-011-564-4896; Fax: +39-011-564-4899; E-mail: sebastiano.foti@polito.it

[2]Associate Professor, Dept. of Structural and Geotechnical Eng., Politecnico di Torino, 10129 Italy; Tel. +39-011-564-4826; Fax +39-011-564-4899; E-mail: donato.sabia@polito.it

ABSTRACT
Scour of foundations is a major issue for the structural safety of existing bridges, hence its monitoring is of paramount importance. In the present paper the use of dynamical tests is proposed as a tool for assessment and monitoring, reporting the case history of a bridge presenting evidence of scouring and subjected to retrofitting. Two different approaches have been applied as potential tools for monitoring scour of foundations on the basis of measurements of traffic induced vibrations. One approach is based on modal identification for bridge spans, while the other is based on the observation of the dynamic response of pier foundations. With respect to the latter, numerical simulation on a reference finite element model have been used to choose the parameters for scour monitoring. Both approaches are applied on experimental data collected on the structure prior and after retrofitting, showing their effectiveness.

KEYWORDS:
Modal analysis, scour of foundations, monitoring, dynamics

Introduction

Reviews of bridge failures caused by flooding events show that the main cause of collapse is related to scour of foundations (Ballio et al., 1998; Mellville and Coleman, 2000). A screening and evaluation program in the United States reports more than 26000 scour critical and more than 26000 scour susceptible bridges over a total of almost 500000 bridges (Pagàn-Ortiz, 2003). Scour monitoring programs are hence a priority for safety assessment of bridges over rivers and water channels. During a flood scouring is neither visible nor easy to check with conventional methods and scour holes are typically filled in the falling stage of a flood. A real time monitoring is required during the flood event with the use of fixed or portable instruments.
A posteriori evaluation of bridge safety requires an evaluation of the influence of scour on the structural behavior. It can be difficult to assess the influence of the scour hole in the nearby of the foundation, because once it has been filled it is not easy to detect the maximum scour that has been reached during the flood. Moreover, infill materials typically show inferior mechanical properties with respect to the original

material, hence worsening the safety conditions of the foundation system and consequently of the bridge.
The overall response of the bridge to static and dynamic loads is influenced by soil-foundation-structure interaction. The analysis of the dynamic behavior of the bridge and/or of the foundation system can provide useful elements for the evaluation of flood consequences. The comparison between the dynamical responses of the structural elements of a viaduct or the comparison between experimental tests conducted at different times in the lifespan of a bridge can provide useful information concerning the change in the static scheme caused by scouring of foundations.
Dynamic identification based on traffic loads can provide an efficient and cost-effective tool for the implementation of such a strategy. The influence of scour of foundations on modal response of a bridge has been investigated using FEM numerical models showing the potential of such approach (Occelli P., 2004). Moreover the dynamic response of the pier to the traffic load is also strongly affected by the presence of the scour hole, even if filled.
In the present paper the case history of a bridge in Northern Italy is presented. One of the piers of the bridge was severely affected by scouring during a major flood event in the year 2000. The pier underwent marked rotations, with a subsequent drift over a period of time. For safety concerns, the bridge was retrofitted replacing the damaged pier, while leaving unaltered the remaining piers. Two dynamical surveys were conducted; one prior to the retrofitting and the other after the pier had been replaced. Tests were planned to compare the dynamical behavior of the pier affected by scour of foundation with the other ones and the overall behavior of the bridge prior and after the retrofitting.
In this study two different approaches have been applied as potential tools for monitoring scour of foundations on the basis of traffic induced vibrations. One approach is based on modal identification for the bridge spans, while the other is based on the analysis of the dynamic response of pier foundations.

The bridge

The bridge is located in the nearby of Turin (Italy), along a road which connects Strambino to the South and Piverone to the North. It crosses the Dora Baltea River, which is an affluent of the Po River and is characterised by heavy seasonal flows caused by thawing in the nearby mountains and/or heavy rains. The bridge, which was built in 1965, has five 30 m spans constituted of four simply supported longitudinal beams of prestressed reinforced concrete connected by five transversal beams. The foundation system of each one of the 4 piers in the water bed was originally constituted by a mat on 24 piles with diameter 600 mm and length 15 m. To protect the foundation against scouring, a series of 55 piles with diameter 400 mm and length 8 m was placed all around the perimeter of each foundation mat in the 1980s. In the paper, spans and piers are numbered with sequential numbers from North to South; for example S1 and P1 are respectively the northernmost span and northernmost pier (Figure 1).

The local stratigraphy beneath the piers is composed essentially by two geologic formations: a first alluvial layer of sands and gravels of variable thickness (5 m to 20 m going from South to North), underlain by a very soft silty clay likely of lacustrine origin.

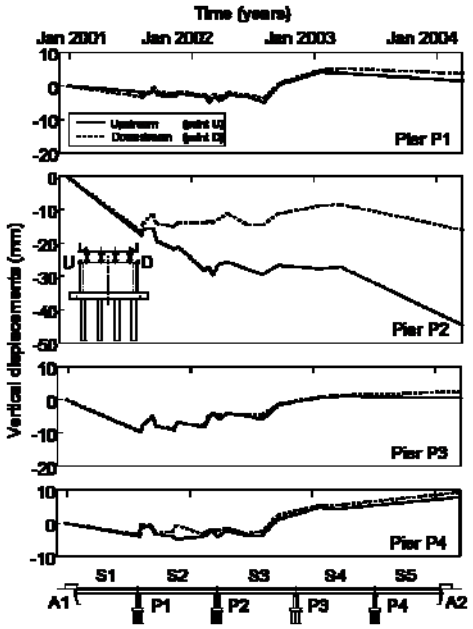

Figure 1 Topographical monitoring on bridge piers

At the time of construction, the riverbed was at the same level of the top of the foundation mat. General and local erosion caused over the years a considerable scouring of pier foundations, so that in 1982 the top 2-3 meters of the piles were above the riverbed. At that time it was decided to use cement injections to realize a single foundation block delimited by the edge piles below the foundation mat. The success of this operation was indeed very limited, likely because water currents washed up the cement before its hardening.

The flood of year 2000 caused further scour in the foundation of the piers. A bathymetry of the riverbed after the flood event evidenced generalised erosion, with a particularly marked scour for one of the pier (P2), where the riverbed was 6 meters beneath the top of the foundation mat (i.e. the top 5 meters of the piles were without lateral constrain). As a safety measure, a limitation of the traffic over the bridge was imposed at that time. Moreover a continuous monitoring of the piers was started in order to trigger emergency actions if needed. The monitoring plan consisted in topographical measurements to detect rotations of the piers and the installation of a permanent inclinometer for the critical pier. The relative movements of reference points on the upstream and downstream side of each pier are reported in Figure 1. A consistent settlement with a marked rotation was detected for pier P2. The two sides of the pier were subjected respectively to vertical displacements of 16 mm and 44 mm as of March 2004. Settlements of other piers were very limited and did not show marked differences between the upstream and the downstream side of each pier. The measurements also showed a later stabilization, probably due both to the restrictions to traffic and to a partial refilling of the scour hole.

Because of budget restrictions and considering that the construction of a new bridge is planned in the next future, it was decided to retrofit the bridge by substituting pier P2 only, whereas other piers would remain unaltered (Figure 2 and 3). The retrofitting has taken place in the spring of 2004. The old foundation mat of pier P2 has been incorporated into a larger one founded on 6 large diameter piles with length 47 m. Two columns founded on the new foundation mat carry the bridge spans. The old pier has been disconnected from the bridge spans, so that no load is transferred to the old foundation.



Figure 2 The bridge before retrofitting of pier P2 (Downstream view from North)



Figure 3 The bridge after retrofitting of pier P2 (Downstream view from North)

Bridge spans experimental response

The dynamic behavior of a bridge can be studied experimentally by monitoring its response to external loads. In the present study, traffic induced vibrations have been analyzed. The advantage of such an approach is that the structure remains operative during the measurements and there is no need for expensive loading systems.

Experimental data from vibration monitoring can be used to identify the mode of vibrations of the structure, which are associated to its mechanical and geometrical parameters. Hence dynamical tests and modal identification techniques constitute a tool of fundamental importance in monitoring structures (e.g. Giraldo et al., 2009) and in particular bridges (e.g. Nayeri et al., 2009). The experimental modes can be compared with the modes calculated for a reference numerical model of the structure in order to identify damages or modifications of the structural scheme. Multiple realizations of the same experimental program at different times can be used to monitor the structure.

Dynamic Identification

Several techniques have been proposed to identify the eigenvalues and eigenvectors associated to each mode of vibration on the basis of experimentally measured response of the structure: Auto Regressive Moving Average ARMA (Olafsson et al., 1995); Ibrahim Method (Ibrahim, 1984); Random Decrement (Vandiver et al., 1982); Eigensystem Realization Algorithm ERA (Juang and Pappa, 1985). All these methods are aimed at the definition of a mathematical model which is able to link the theoretical response of a dynamical system to the time history measurements.

In this work the ARMAV technique (Juang, 1994; Liung, 1999; Maia and Silva 1997; Bodeaux and Golinval, 2001), which is a vector extension of ARMA technique, has been used. The response of the structure is monitored in a finite number of measurement points obtaining an ensemble of discrete signals in time. An ARMA model of order (p,q), called ARMA(p,q), expresses a single signal as:

$$x_n = \sum_{k=1}^{p} \alpha_k x_{n-k} + \sum_{k=1}^{q} \beta_k u_{n-k} + u_n \tag{1}$$

where x_n is the array of the structural responses at the nth instant of time, u_n is the array of input values (white noise), α_k are the model autoregressive parameters (AR) and β_k are the moving average parameters (MA).

The extension of the scalar model to phenomena described by "g" time series is called ARMAV(p,q) and is defined by the following vector formulation:

$$\{\mathrm{x}_n\} = \sum_{k=1}^{p} [a_k]\{x_{n-k}\} + \sum_{k=1}^{q} [b_k]\{u_{n-k}\} + \{u_n\} \tag{2}$$

where $\{\mathrm{x}_n\}$, $\{u_n\}$ are vectors of dimension "g" and $[a_k]$, $[b_k]$ are the matrices of dimension "g·g" of the model autoregressive and moving average coefficients.

By incorporating the "p" matrices $[a_k]$ into a single matrix $[A]$ and "q" matrices $[B]$ into a single matrix $[B]$, the equation (2) can be written as follows:

$$\{y_n\} = [A]\{y_{n-1}\} + [B]\{w_n\}. \tag{3}$$

$\{y_n\}$ and $\{w_n\}$ are called "state space vectors" and consist of "p" vectors $\{\mathrm{x}_n\}$ and "q" vectors $\{u_n\}$ respectively.

The parameters of the ARMAV model (**A** and **B**) are determined on the basis of the experimental measurements of the dynamic response, with a regression process on the recorded signals. Being the problem overdetermined, the solution is obtained using least square or maximum likelihood techniques.

The accuracy of the model identification procedure is influenced by the order (p,q) of the ARMAV model. Indeed an increase of the order leads to a reduction on the error on the approximation of the measured structural response. On the other hand on the basis of Occam's razor, the degree of complexity of any model should be as low as possible while achieving a good representation of the experimental data. In general it is not possible to select a-priori an optimal value for the order (p,q) of the ARMAV model, which is affected by several variables such as: the number of measurement points, the level of background noise in the recorded time histories and the number of records. Several criteria have been proposed to select the best order (p,q) to be used in the analysis, among which the FPE (Final Prediction Error criterion) and the AIC (Akaike Information Criterion) (Akaike, 1969, 1973; Marple, 1987). The procedure is based on a trial and error approach, performing preliminary analyses with increasing (p,q) order and estimating the corresponding approximation error with respect to experimental data. The optimal value is selected as the lowest value such that a subsequent increase in the (p,q) order does not produce a significant improvement in terms of approximation error reduction.

It can be shown that the parameters of the ARMAV model, and in particular $\mathbf{A}$, are closely related to the physical parameters of a dynamic system (De Stefano et al., 1997; Lardies, 2009). Indeed the equations of motion for a dynamical system having "*g*" degrees of freedom can be expressed in time domain as:

$$\mathbf{M}\ddot{\mathbf{x}}(t)+\mathbf{C}\dot{\mathbf{x}}(t)+\mathbf{K}\mathbf{x}(t)=\mathbf{f}(t) \tag{4}$$

where:

$\mathbf{M}$, $\mathbf{K}$ and $\mathbf{C}$ are respectively mass, stiffness and damping matrices, $\mathbf{x}(t)$ are Lagrangian coordinates and $\mathbf{f}(t)$ is the external excitation.

By introducing the following variables:

$$\mathbf{z}(t)=\begin{Bmatrix}\dot{\mathbf{x}}(t)\\ \mathbf{x}(t)\end{Bmatrix};\quad \tilde{\mathbf{f}}(t)=\begin{Bmatrix}\mathbf{f}(t)\\ 0\end{Bmatrix}; \tag{5}$$

the equations of motion can be rewritten as:

$$\dot{\mathbf{z}}(t)=\mathbf{D}\mathbf{z}(t)+\mathbf{E}\tilde{\mathbf{f}}(t) \tag{6}$$

where $\mathbf{D}$ and $\mathbf{E}$ are combinations of $\mathbf{M}$, $\mathbf{K}$ and $\mathbf{C}$.

The analogy between Eq. 6 and Eq. 3 shows that the ARMAV model parameters are closely linked to the dynamical response of the system. Indeed it can be shown that the natural frequencies ω_i and the damping ζ_i of the dynamical system can be evaluated from the eigenvalues of $\mathbf{A}$ using the following relationships (De Stefano et al., 1997; Lardies, 2009):

$$\omega_i=\sqrt{\sigma_i^2+\Omega_i^2};\qquad \zeta_i=-\frac{\sigma_i}{\omega_i}; \tag{7}$$

with

$$\begin{cases}\sigma_i=\dfrac{1}{2\Delta t}\ln(\lambda_i\cdot\lambda_i^*)\\ \\ \Omega_i=\dfrac{1}{\Delta t}\arctan\left(\dfrac{\mathrm{Im}(\lambda_i)}{\mathrm{Re}(\lambda_i)}\right)\end{cases}\quad ;\quad i=1,..,g \tag{8}$$

where Δt is the sampling ratio of signals.

The eigenvectors of $\mathbf{A}$ represent the modal shapes for the dynamical system. In synthesis experimental data can be used to estimate the dynamical parameters of the structure (natural frequencies and associated modal shapes).

In theory the maximum number of modes which can be identified using an ARMAV model is equal to the number of degree of freedom "g", which corresponds to the number of signals acquired simultaneously on the structure. In practice this number is limited by uncertainties caused by external noise and by numerical errors.

Data acquisition

The dynamical tests were planned to assess the influence of scour of foundation on the dynamical behaviour of the bridge and to check the effect of retrofitting. Hence two complete set of measurements were performed before and after the retrofitting.

The testing setup has been designed on the basis of a sensitivity analysis performed numerically on a finite element model of the bridge. The number and spatial distribution of measurement points and the sampling frequency have been selected considering eigenvectors and eigenvalues of the modal analysis. The frequency range of interest, which was identified by modal analysis in between 2Hz and 30Hz, has been subsequently confirmed by preliminary spectral analysis of the recorded signals.

Data have been collected using a dynamical signal acquisition device (LMS SCADAS III) and 14 low frequency accelerometers (PCB mod. 3701G3FA3G). The sampling rate was 100 Hz and the duration of each record 40 s.

Two different test setup have been used for each bridge span, with two common measurement points (point 5 and point 20 in Figure 4) in order to assemble a single dataset of 26 measurement points for each span during processing. At each point vertical accelerations have been measured.

About twenty records were acquired for each testing setup, selecting time windows with heavy traffic loads (passage of trucks and other heavy vehicles). The acquisition was manually triggered when vehicles were approaching the bridge and the long time window of the acquisition allowed the subsequent stationary vibration to be collected.

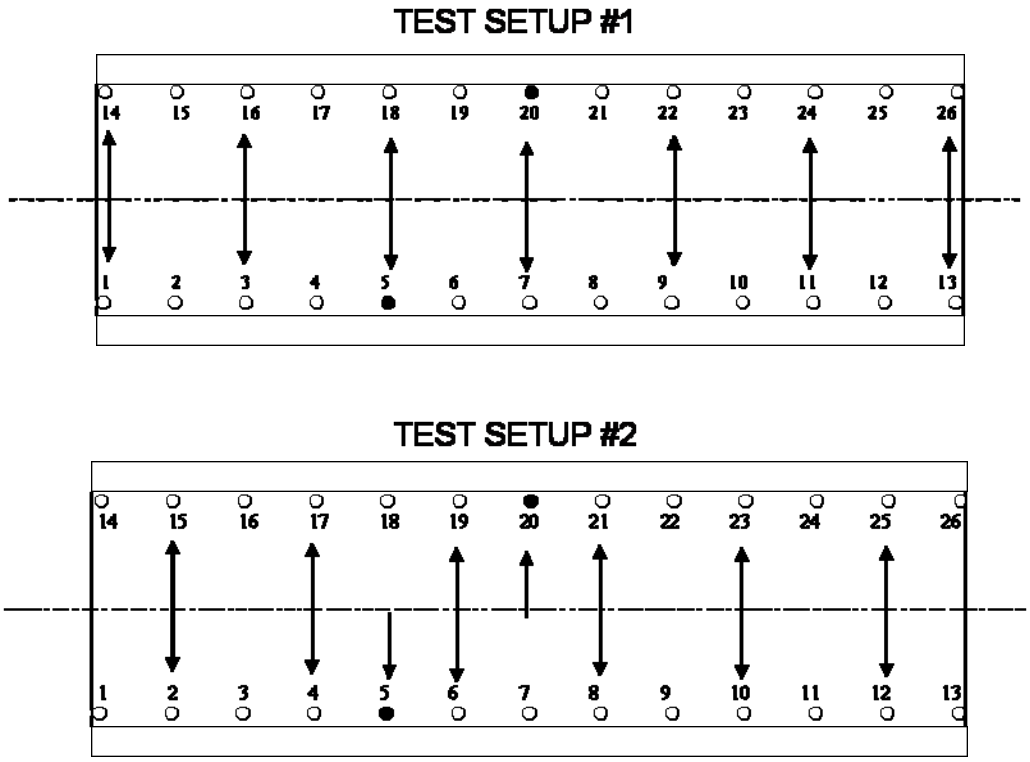

Figure 4 Setups and measurement points over the bridge span in plan view. Arrows represents the active measurement points for each setup and black circle represents the reference points to assemble the two datasets.

Signal Processing

Signals have been preliminary band pass filtered to remove the influence of background noise. The frequency range of interest (1Hz to 30Hz) has been selected on the basis of the aforementioned sensitivity analysis on a FEM model and of a preliminary identification process based on Fourier spectra of the recorded signals.

The ARMAV method is rigorous only for stationary signals. In general, signals can be considered stationary in time when the statistical moments of the distribution of the measured variable are invariant in time. For experimental data related to traffic induced vibrations, a weak form of stationarity is accepted, requiring the time invariance of the two lower statistical moments. Time windows in which the signal can be considered stationary are hence identified looking at the time invariance of mean and variance. This search is implemented considering the deviation of the measured probability density from the Gaussian distribution. The stationarity has been checked with a moving time window of width 10 s and overlap 5 s. Modal identification is finally performed using time windows in which the signal can be considered stationary.

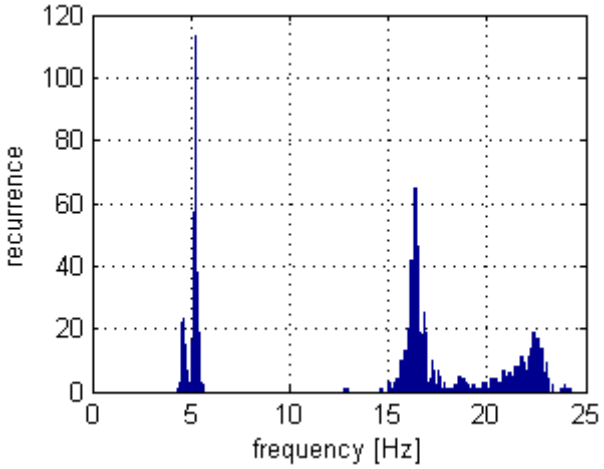

Figure 5 Distribution of the identified modal frequencies for the span S2

On the basis of preliminary analyses, an ARMAV model with order (2,1) has been used for the present dataset. After the application of the ARMAV technique, a selection process involving different steps has been carried out to recognize possible structural vibration modes among all the identified modes.
In the first step actual structural modes have been selected on the basis of damping values. Considering the characteristics of the structure under investigation, all the vibration modes with modal damping factor higher than 10% have been discarded. Figure 5 shows the distribution of the identified modal frequencies for the span S2 after this step.

In the second step the identified vibration modes have been regarded as possible structural vibration modes if their frequency was close to one of the most recurrent values identified in the previous stage (Figure 5).

Eventually, the frequency and modal damping values of the structure have been determined as the mean of the values corresponding to vibration modes characterized by mutually similar mode shapes. The modal shapes Φ of the i-the and j-th modes are deemed similar if their MAC (Modal Assurance Criterion) coefficient:

$$MAC_{i,j} = \frac{\left|\Phi_i^H \Phi_j\right|^2}{\left|\Phi_i^H \Phi_i\right| \cdot \left|\Phi_j^H \Phi_j\right|} \qquad (9)$$

is greater than a predetermined threshold (in this case assumed to be 0.90). In Eq. 9, the superscript *H* stands for the Hermitian of the vector. Moreover an identified modal shape has been retained only if its components are characterized by phase angles close to 0° or 180°, in order to exclude unreal solutions.

The process is repeated over several realizations of the measurements, so that a statistical analysis of the results can be used to evaluate the reliability of inferred dynamic parameters.

Experimental results

The experimental data have been processed using the ARMAV technique to identify the vibration modes of the bridge superstructure. A total of 6 modes have been identified. For example the modal shapes for the first mode before the retrofitting are represented in Figure 6. The comparison of test results before and after the retrofitting is straightforward for the bridge spans, which from a structural point of view are essentially unaltered in the retrofitting process. Modes #1 and #3 present the most significant variations and are reported in Figure 7 and 8 as projections in the vertical plane. This representation allows a clearer comparison of the modal shapes before and after retrofitting than a 3D visualization as the one reported in Figure 6. The fundamental mode before the retrofitting (Figure 7a) shows some differences both in frequencies and modal shapes. The second span, which is sitting on the scoured pier P2, presents a lower frequency of the fundamental mode and an anomalous modal shape if compared to the other spans. The different response can be associated to the different support conditions. The possible physical explanation is that the pier rigid rotation induced by scouring could limit the efficiency of the support for the external beam, leading to an increased deformability of the span. The higher frequency and the anomalous modal shape of span S5 can be explained by the conditions of the foundation of pier P4, which was partially covered by soil and debris at the time of testing (see Figure 2). The anomaly of the span S2 is confirmed by the third modal shape (Figure 8a), supporting the assumption of scour induced anomalies rather than defects in the span itself. The comparison with the results obtained after the retrofitting (Figure 7b and 8b) confirms this interpretation. The modal shapes are more regular and the anomaly of span S2 has disappeared. Incidentally, also the anomaly in the fundamental mode of span S5 disappeared. In fact the soil above the foundation of pier P4 was removed during the retrofitting works to allow the river to flow also below span S5 to compensate the restriction of the rivebed caused by the construction access path to pier P2. Hence pier P4 after the retrofitting was exactly in the same conditions as pier P1 and P3 (see Figure 3). The natural frequency for the mode #1 is exactly the same for spans S1, S4 and S5 which have similar conditions in terms of support, whereas the frequencies for span S2 and S3 are lower. This observation can be justified considering the scheme of the new pier P2, in which two columns support a beam on which the bridge spans are deployed. The deformability of the beam implies looser support condition for span S2 and S3, hence the fundamental mode is characterized by a lower natural frequency (Figure 7b). The results obtained for mode #3 support the above considerations; indeed the modal shape for the span S2 is now similar to the others.

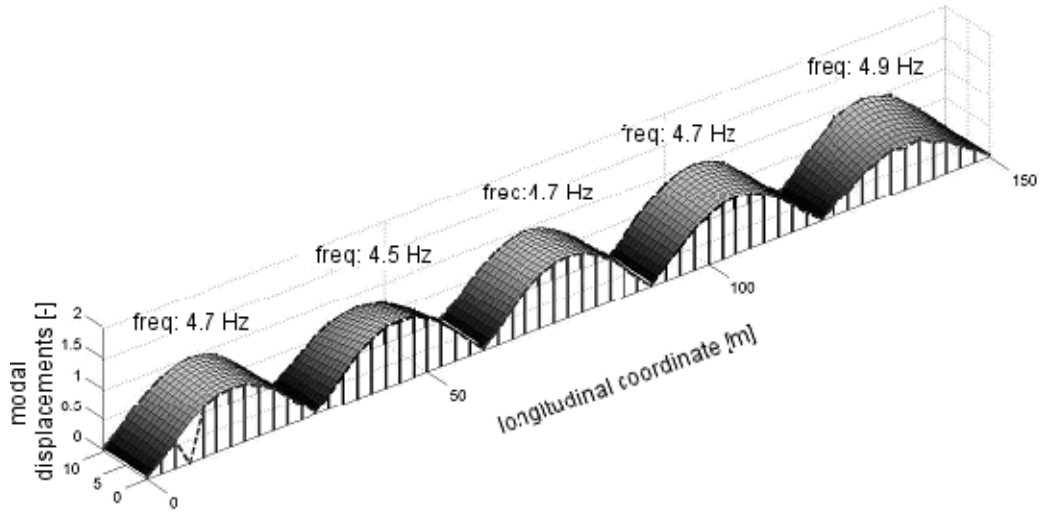

Figure 6 Modal shapes and frequencies of mode #1 for bridge spans before retrofitting

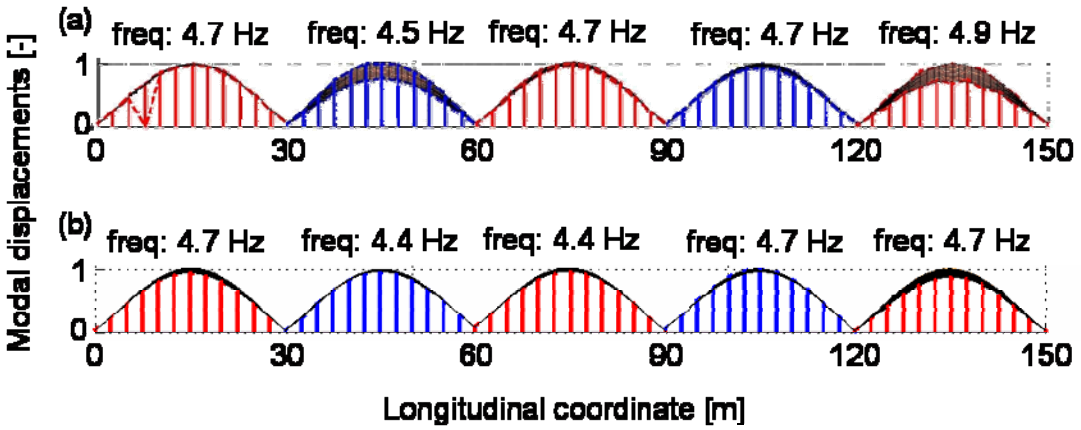

Figure 7 Modal shapes and frequencies of mode #1 for bridge spans: a) before retrofitting; b) after retrofitting (projection of modal displacements in the vertical plan)

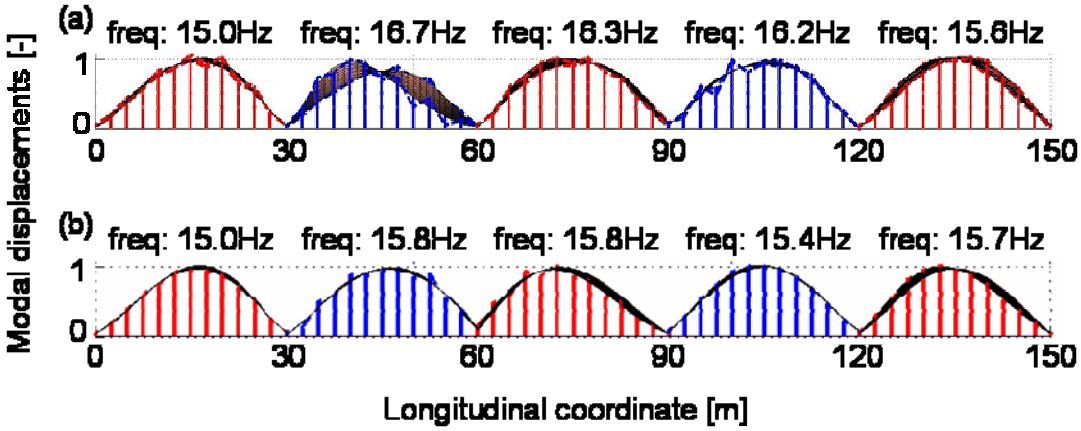

Figure 8 Modal shapes and frequencies of mode #3 for bridge spans: a) before retrofitting; b) after retrofitting (projection of modal displacements in the vertical plan)

Piers experimental response

The experimental data collected on the piers have been analyzed using a different approach. Indeed modal identification was in this case less useful because of the rigid body motion of the piers. The study has been based on the dynamic response of the pier foundation to traffic induced vibrations. Scouring is expected to reduce the global stiffness of the foundation system, so that the effect of a given load is different if compared to the unaltered situation. Similarly, the difference in stiffness is sometimes used in order to identify the type of foundation (Olson et al., 1998).

Since the excitation was unknown and the measurements on different piers have been collected at different times, a direct comparison of the induced displacements to infer stiffness variation was not feasible.

Considering the typical manifestation of localized erosion with scour holes concentrated on the upstream side, a pier affected by scour of foundations is expected to show a markedly asymmetric dynamic behavior. In the present work reference is made to signals collected along a straight line on the foundation mat using an array of vertical receivers. In this case the motion at each reference point is expected to be different because of rotations of the foundation caused by uneven support conditions. Since the receivers commonly used in dynamical tests are accelerometers, in the present work accelerations will be considered as motion parameters, but similar conclusions could be obtained also in terms of velocities or displacements.

Several possibilities can be devised in terms of signal analysis to study the asymmetric response of the pier. For example it would be possible to look at relative levels of maximum acceleration along the receiver array or at cross-correlation of the signals with respect to reference receivers placed on the bridge deck.

In the present study we use the covariance matrix of the signals. Considering a discrete set of discrete signals $s_n(t)$, the covariance matrix COV is defined as (Marple, 1987; Santamarina and Fratta, 2005):

$$COV_{ij}=E[(s_i(t)-\mu_i)(s_j(t)-\mu_j)] \qquad \text{for } i=1\ldots n;\ j=1\ldots n \qquad (10)$$

where E[...] represents the mathematical expectation and $\mu_j=E[s_j(t)]$. The diagonal terms of the covariance matrix coincide with variances of single signals and, in terms of signal analysis, with the maximum values of their autocorrelations (Santamarina and Fratta, 2005). These values can be considered more robust motion parameters than the maximum accelerations, because they take into account the whole duration of the signal.

The magnitude of the covariance is affected by a number of different factors, for one the type and intensity of the external load. Hence it cannot be used for a quantitative assessment of the response of the pier both in unscoured and scoured conditions. Still its variation along the structural element can provide a significant index to detect the presence of scouring as it will be shown with numerical and experimental data.

Numerical Simulations

Some numerical simulations have been performed in order to assess the sensibility of the overall dynamic response of the system to scour of foundations. A FEM model has been built using the code Cosmos/m ™ (SRAC, 1999). The model is not aimed at reproducing accurately the existing bridge since several details of the bridge itself and its foundations system are not known, as for example material parameters both of the structure and of the foundation soil.

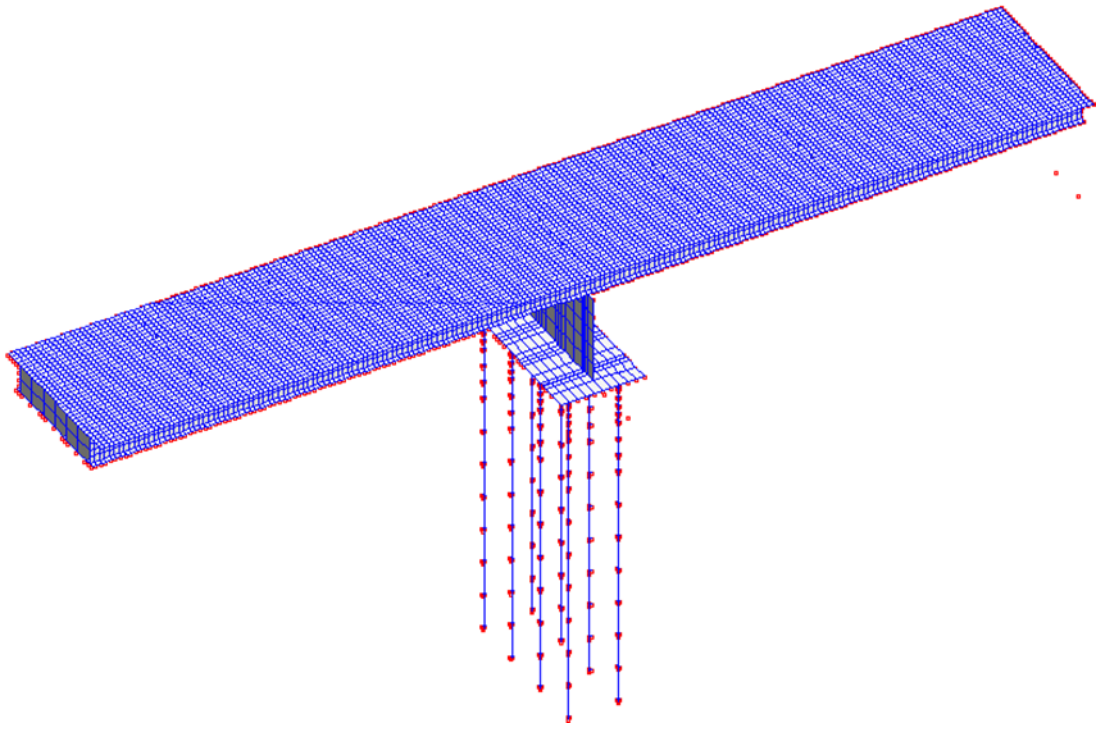

Figure 9 FEM Model of two spans resting on a pier founded on piled foundation

Considering the static scheme of the bridge, it is sufficient to reproduce a single pier and the two spans supported by it. A view of the FEM model is shown in Figure 9. The superstructure and the foundation mat are modeled using Shell elements, while pile foundations are reproduced using 3D Beam elements. For both classes of elements a linear elastic constitutive law has been adopted.

The interaction between the pile and the surrounding soil is modeled with distributed vertical and horizontal springs (Roesset, 1980). Considering the low strains induced by traffic loads, the springs are linear elastic.

The effect of scour has been modeled by suppressing the springs in the top portion of selected piles. In particular several configurations of the scour hole have been modeled by suppressing the springs for one or more rows of piles and for different depths.

A modal analysis of the bridge in its unaltered and scoured configurations showed moderate differences in natural frequencies and modal shapes (Occelli, 2004). Indeed the pier behaves as a rigid body and as such the sensitivity of modal analysis with respect to variations in soil-structure interaction is limited. Consequently the expected differences in experimental modes were not deemed to be significant considering also the achievable accuracy in experimental tests.

The model has then been used to asses the response of the bridge to external excitation using modal superposition. Considering the scope of this analysis a simple impulsive time history of vertical external forces has been applied on top of the bridge deck. On the basis of a simplified assessment of traffic loads imposed by trucks, a triangular impulse of magnitude 310 kN and duration equal to 0.02 s has been selected as external excitation.

To reproduce the typical setup of the experiments (described in the following sections) a set of 6 reference points along the foundation mat has been selected (Figure 10). The acceleration time histories have been computed in the different

configurations of the model (with and without scouring). An example of synthetic time history is reported in Figure 11.
Figure 12 reports the diagonal terms of the covariance matrix of the synthetic signals computed for the reference points of Figure 10. Three different situations are compared: the initial FEM model with unaltered springs and two models in which localized scouring has been modeled suppressing part of the springs for the two rows of piles on the upstream side of the foundation. The external impulsive load is placed on the upstream carriageway. The effect of scouring is neatly indicated from the progressive asymmetric behavior with increasing scour depth.

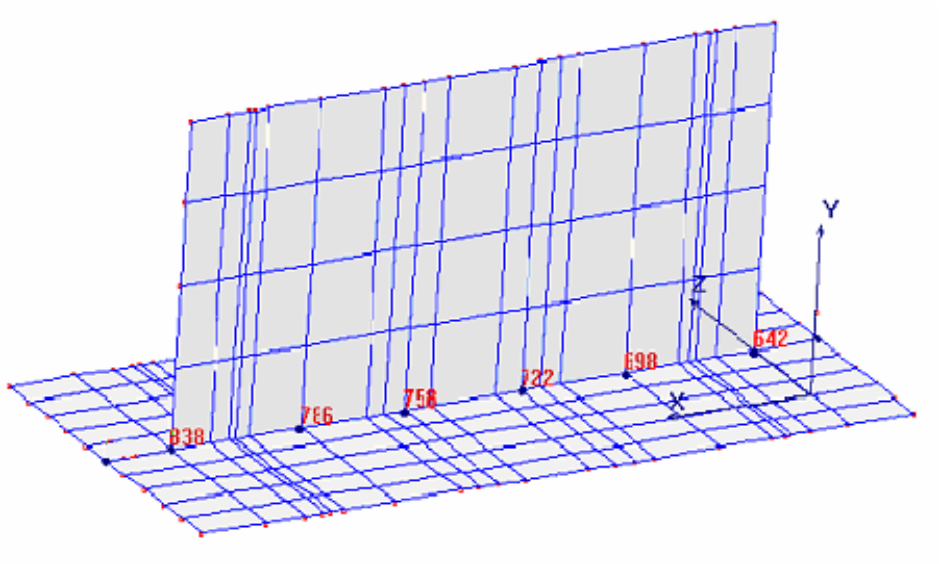

Figure 10 Reference points on the foundation mat of the FEM Model

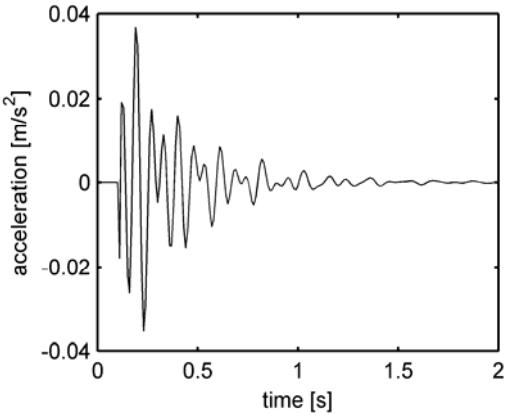

Figure 11 Example of synthetic acceleration time history from FEM simulations

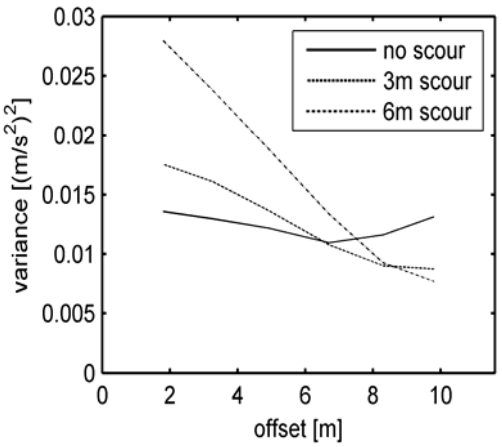

Figure 12 Numerical simulations: global dynamic response of the pier for different level of scour (load applied on the same side of scour hole)

In order to verify the influence of the load position, the same numerical simulations have been performed switching the load to the downstream carriageway. In this case the load is applied on the opposite side of the scour hole. The results are reported in Figure 13. Also in this case the progressive erosion leads to an asymmetric behavior of the pier, but the phenomenon is much less marked as clearly shown in Figure 14, where the global responses for the case of 6m scour with different position of the external load are compared.
Not only the global dynamic response of the pier is sensitive to erosion in the top portion of the pile foundation, but also it would be possible to locate the scour hole beneath the foundation by comparing the results for different positions of the external load. Indeed a load applied on the same side of the scour hole gives a different effect in the response than a load applied on the opposite side. Obviously such conclusion is strictly valid only for the simplified numerical model and needs to be confirmed by more detailed numerical analyses and/or experimental evidence.

Experimental Results
Experimental data have been collected using the same testing equipment as for the measurements on the bridge spans. In both testing sessions (before and after the retrofitting), 12 of the available accelerometers were placed on the foundation slab, whereas the other two were placed on the spans as external reference points. The latter were coincident with points 4 and 8 of the test setup for the bridge spans (Figure 4). The measurement setup on pier foundations was varied in the second testing session on the basis of the previous experience, in an attempt to identify more accurately the 3D dynamical behavior of the foundation. A typical experimental setup for the 12 receivers placed on the foundation mat is reported in Figure 15, showing the orientation of each receiver. The acquisition setup was such that the experimental data could be used also for modal identification.
For the present study only the vertical components along a straight line of the mat foundation are considered (e.g. receivers 3, 4, 5, 6 in Figure 15). An example of experimental acceleration time history for a point on the foundation mat is reported in Figure 16. The vibration induced by the passage of the truck is easily located in the first part of the signal.
In order to assess the influence of load position, the signals related to trucks passing on each of the two carriageways have been analyzed separately.
The first testing session was conducted in July 2003 prior to the retrofitting of pier P2. The experimental signals have been filtered to remove the high frequency noise, using a band-pass filter 1-10Hz, which has been chosen on the basis of the experimental modal identification of the piers in order to include the contribution of all the significant modes. Figure 17 reports the results obtained for each pier of the bridge on the first testing session (before retrofitting of pier P2). For each pier, three repetitions of the test are reproduced (i.e. the elaboration of the signals associated to the passage of three different trucks). All the experimental data reported in this figure are related to traffic passing on the upstream carriageway of the bridge.
The comparison of the results clearly shows the different global dynamic response of pier P2, likely associated to the scour phenomenon evidenced by previous independent measurements (Figure 1). The detected asymmetry is very similar to the one obtained in the numerical simulations (Figure 11).

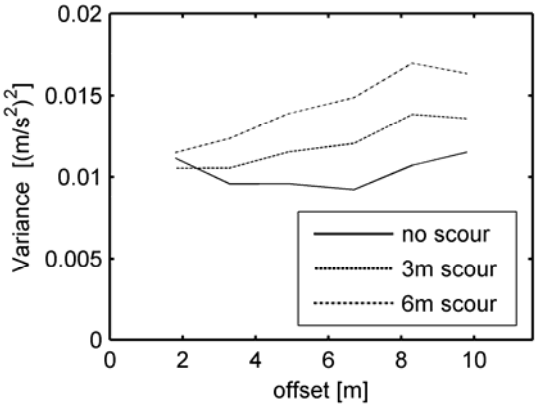

Figure 13 Numerical simulations: global dynamic response of the pier for different level of scour (load applied on the opposite side of scour hole)

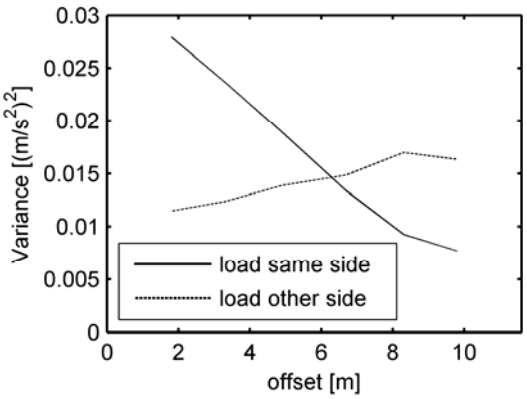

Figure 14 Numerical simulations: influence of the load position on the global dynamic

Apart from the asymmetry of the response, the values of variance obtained on pier P2 are much larger than the ones on the other piers. The second highest levels of variance are obtained for pier P3, which is the other central pier, hence more likely interested by erosion phenomena (see Figure 17). Although these observations are only qualitative, because traffic induced vibrations are associated to vehicles having different (and not controlled) weight and velocity, they can be very interesting for subsequent investigations in which a controlled load could be used and a simultaneous acquisition on the piers could lead to more comparable results.

To confirm the influence of load position, which has been evidenced by the numerical simulations, the data related to traffic on the downstream carriageway have been analyzed separately. Figure 18 reports the results for pier P2. In this case only a slight asymmetry is detected and the absolute values of the signal variances are much lower. The comparison between average experimental results obtained for the traffic load on the two carriageways (Figure 19) is in agreement with the numerical simulations (Figure 14).

The conclusion that can be drawn from these experimental results is that pier P2 is affected by a localized scour below the upstream portion of the foundation mat. This result is in good agreement with topographical monitoring (Figure 1).

The experimental tests were repeated in September 2004 after the retrofitting. The results for piers P1, P3 and P4 did not show significant differences with respect to the first testing campaign and are not reported in the present paper. In fact these piers were unaltered. The results for pier P2 are reported in Figure 20. As expected the behavior of the pier is now significantly different and it is characterized by an overall symmetry.

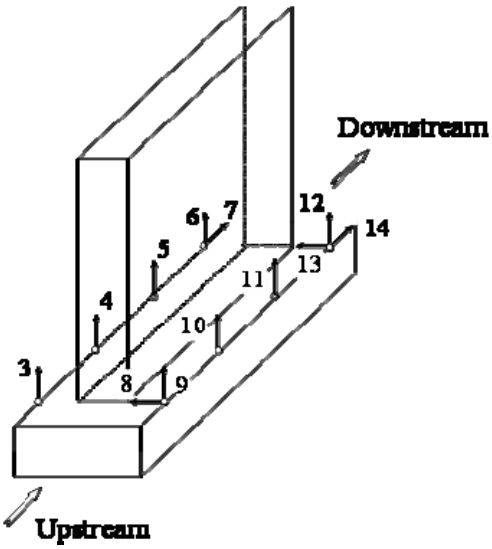

Figure 15 Experimental setup (arrows identify the orientations of accelerometers)

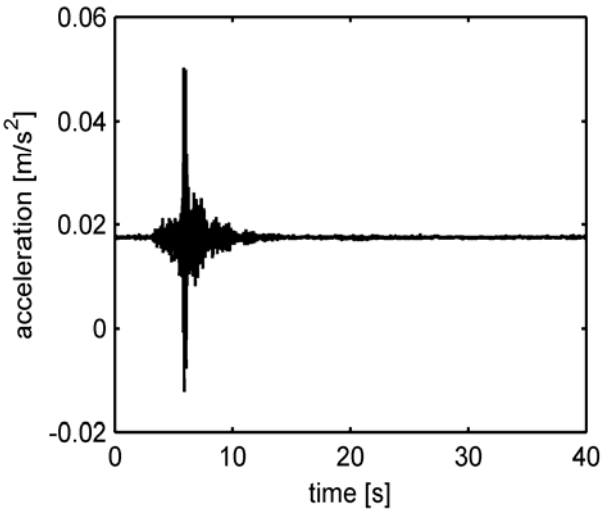

Figure 16 Example of experimental acceleration time history on the foundation mat

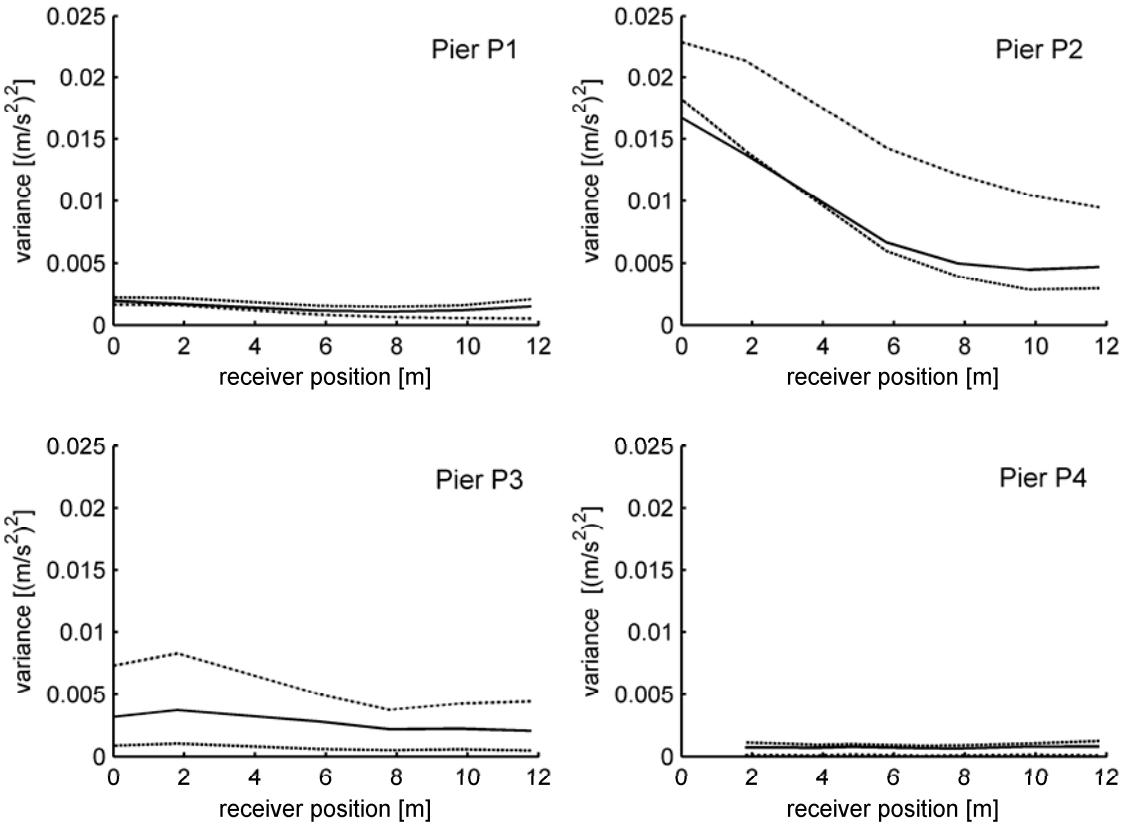

Figure 17 Experimental results: dynamic response of piers before the retrofitting for traffic on the upstream carriageway. The results for three different records are reported.

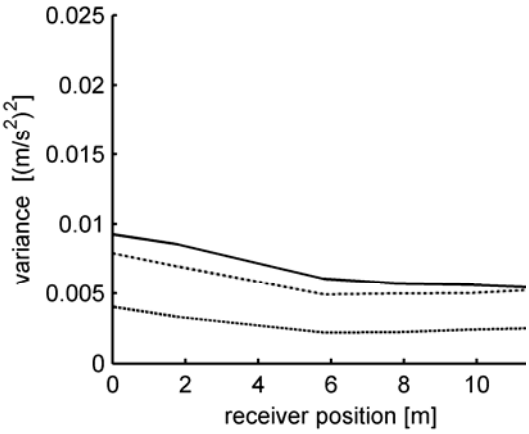

Figure 18 Experimental results for Pier P2 for traffic on the downstream carriageway. The results for three different records are reported.

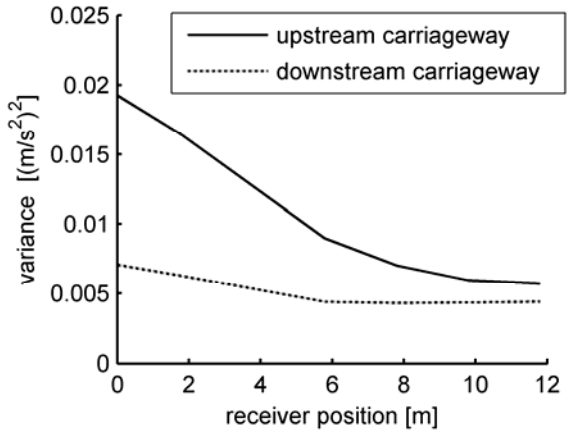

Figure 19 Experimental results: influence of the load position

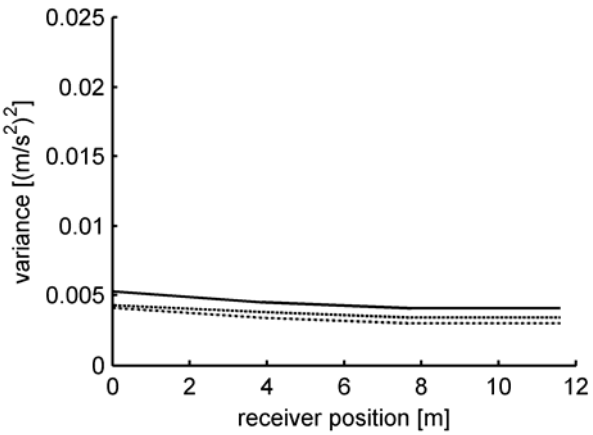

Figure 20 Experimental results for Pier P2 after retrofitting. The results for three different records are reported.

Final Remarks

The present study shows the great potential of dynamic tests in monitoring bridges with respect to scour of foundations. Indeed such phenomena affect the dynamical behavior of the bridge as a whole and of its structural components (piers, spans, abutments). Comparative analyses can be used to highlight the difference in the behavior of a single pier with respect to the others or, if the tests are repeated in time, to monitor the evolution of scour of foundations. The second approach can be particularly interesting if tests are executed before and after a main flood event.

In the case history reported in the present paper, tests have been performed before and after the retrofitting of a bridge, which was interested by marked localized erosion below one of its four piers.

Comparison of modes of vibration for the superstructure, obtained with ARMAV analysis of experimental data, shows that dynamic tests can indeed identify piers having different foundation conditions depending on scouring. These results are particularly encouraging considering the static scheme of this bridge (simply supported spans) and the type of foundation (piles). The observed differences are

expected to be even more evident for bridges with undetermined structural schemes and/or shallow foundations.
Other significant results have been obtained from the analysis of the dynamic response of the piers subjected to traffic loads. If the maximum value of the diagonal terms of the covariance matrix (variance of single signals) is selected as a performance parameter, it is possible to detect piers affected by scour of foundations. The analysis of data retrieved after the retrofitting of the bridge clearly shows the effectiveness of such a simple approach, which can be easily implemented also with fixed instruments to monitor bridge performance continuously.
Both approaches represent appealing tools for monitoring scour of foundations with measurements of traffic induced vibrations, which do not require an interruption of the service for the infrastructure. The proposed strategy is not aimed at quantifying the extent of scouring, rather to provide an insight on the existence and relevance of present and past scouring with reference to the actual structural response. Moreover repetitions of tests at subsequent times can provide an insight on the evolution of the phenomenon.

ACKNOLEDGEMENTS

The experimental part of the work has been funded by the Provincia di Torino (Torino County Authority), to whom the authors are also grateful for data on the topographical monitoring and information on the history of the bridge. Authors are grateful to the following individuals for the precious help in collecting and processing experimental data and in performing numerical simulations: Diego Rivella, Paolo Occelli, Marco Raviolo and Andrea Toselli.

REFERENCES

Akaike, H. (1969). “Fitting auto-regressive models for prediction.” *Am. Inst. Stat. Math.*, 21, 243-347

Akaike, H. (1973). “Maximum likelihood identification of Gaussian autoregressive moving average models.” *Biometrika*, 60 (2), 255-265

Ballio, F., Bianchi, A., Franzetti, S., De Falco, F., and Mancini, M. (1998). “Vulnerabilità idraulica di ponti fluviali.” *Atti del XXVI convegno nazionale di idraulica e costruzioni idrauliche*.

Bodeaux, J.B., and Golinval, J.C. (2001). “Application of ARMAV models to the identification and damage detection of mechanical and civil engineering.” *Smart Materials and Structures*, 10, 479-489.

De Stefano, A., Sabia, D., Sabia, L. (1997). “Structural identification using ARMAV models from noisy dynamic response under unknown random excitation.” *Proc., Int. Conf. DAMAS 1997*, 419-428

Giraldo, D.F., Song, W., Dyke, S.J., Caicedo, J.M. (2009). “Modal identification trhough ambient vibration: comparative study.” J. *Eng. Mech.*, 135 (8), 759-770

Ibrahim, S.R. (1982). “A modal identification algorithm for higher accuracy requirements.” AIAA paper N. 84-0928, *Proc., 25th Structures, Structural Dynamics and Material Conference*, Palm Spring, California, 117-122

Juang, J.N. (1994). “Applied system identification.” Prentice-Hall, Englewood Cliffs, USA

Juang, J.N., and Pappa, R.S., (1985). “An eigensystem realization algorithm for modal identification and model reduction.” *J. of Guidance, Control and Dynamics*, (5), 620-627.

Lardies, J. (2009). “Modal parameter identification based on ARMAV and state–space approaches.” *Archive of Applied Mechanics*, online pub. DOI: 10.1007/s00419-009-0322-1

Liung, L. (1999). “System Identification: Theory for user. 2nd ed.” Prentice-Hall, Englewood Cliffs, USA

Maia, N.M.M., Silva, J.M.M. (1997). “Theoretical and experimental modal analysis.” Research Studies Press ltd, Baldock, UK

Marple, L. Jr. (1987). “Digital spectral analysis with applications.” Prentice Hall, Englewood Cliffs.

Melville, B.W., Coleman, S.E. (2000). “Bridge scour.” Water Resources Publications, LLC (Colorado)

Nayeri, R.D., Tasbhigoo, F., Wahbeh, M., Caffrey, J.P., Masri, S.F., Conte, J.P., Elgamal, A. (2009). “Study of time-domain techniques for modal parameter identification of a long suspension bridge with dense sensor arrays.” *J. Eng. Mech.*, 135 (7), 669-683

Occelli, P. (2004). “Influenza dello scalzamento delle pile sul comportamento dinamico dei ponti”, MS thesis, Politecnico di Torino, Turin, Italy (In Italian)

Ólafsson, S. and Sigbjörnsson, R., (1995). “Application of ARMA models to estimate earthquake ground motion and structural response.” *Earthq. Eng. and Struct. Dyn.*. 24, 951-966

Olson, L.D., Jalinoos, F., Aouad, M.F., (1998). “Determination of unknown subsurface bridge foundations.” *Geotechnical Guideline No. 16*, FHWA

Pagán-Ortiz, J.E. (2003). “Scour Program Update.” *Proc., Midwestern Hydraulic Engin. Conf.*, East Lansing, Michigan, August 26 - 28, 2003

Roesset, J.M. (1980). “Stiffness and damping coefficients for foundation.” *Dynamic response of pile foundations: analytical aspects*, O’Neil and Dodry, ed., ASCE, New York (USA), 1-27

Santamarina, J.C., Fratta, D. (2005). ”Discrete signals and inverse problems: An introduction for engineers and scientists.” John Wiley and Sons, West Sussex, UK

SRAC (1999). “Cosmos/m 2.5: User’s guide.” Santa Monica, USA,

Vandiver, J.K., Dunwoody, A.B., Campbell, R.B., and Cook, M F. (1982). “A mathematical basis for the random decrement vibration signature analysis technique.” *J. Mech. Des.*, 104, 307-313.