POLITECNICO DI TORINO
Repository ISTITUZIONALE

Dynamic and kinematic model of a dualclutch transmission

Original
Dynamic and kinematic model of a dualclutch transmission / Galvagno, Enrico; Velardocchia, Mauro; Vigliani, Alessandro. - In: MECHANISM AND MACHINE THEORY. - ISSN 0094-114X. - STAMPA. - 46:6(2011), pp. 794-805. [10.1016/j.mechmachtheory.2011.01.013]

Availability:
This version is available at: 11583/2343430 since:

Publisher:
Elsevier

Published
DOI:10.1016/j.mechmachtheory.2011.01.013

Terms of use:

This article is made available under terms and conditions as specified in the corresponding bibliographic description in the repository

Publisher copyright

(Article begins on next page)

12 October 2024

Post print (i.e. final draft post-refereeing) version of an article published on *Mechanism and Machine Theory*. Beyond the journal formatting, please note that there could be minor changes from this document to the final published version. The final published version is accessible from here:
http://dx.doi.org/10.1016/j.mechmachtheory.2011.01.013
This document has made accessible through PORTO, the Open Access Repository of Politecnico di Torino (http://porto.polito.it), in compliance with the Publisher's copyright policy as reported in the SHERPA-ROMEO website:
http://www.sherpa.ac.uk/romeo/issn/0094-114X/

Dynamic and kinematic model of a dual clutch transmission

E. Galvagno, M. Velardocchia, A. Vigliani

Dipartimento di Meccanica - Politecnico di Torino
C.so Duca degli Abruzzi, 24 - 10129 Torino - ITALY
E-mail: *alessandro.vigliani@polito.it*

Keywords dual clutch automotive transmission

Abstract *In last years Dual Clutch Transmissions (DCT) have spread worldwide in the automotive industry due to their capability to change the actual gear ratio, between engine and driving wheels, without interrupting vehicle traction by means of an efficient mechanical layout. Dynamic performance of DCT and the relating driver perceptions strongly depend on the control system whose main task is to generate the reference signals both for synchronisers and clutches. Detailed mechanical models of DCT system, considering also the synchronisers dynamics, are required to tune these control algorithms.*

This paper investigates the transmission kinematics and dynamics of a DCT, considering all the possible configurations that can take place in relation to the various power flow paths. A detailed analysis of the system with different degrees of freedom (1 to 3) is proposed and the resulting sets of equations are written in an indexed form that can be easily integrated in a vehicle model, thus allowing the description of both gear shift transients and operation with a specific gear.

Finally, some simulation results are presented aiming at comparing the effect of different synchroniser models on transmission and vehicle dynamics.

Nomenclature

C	subscript relative to clutch
d	subscript relative to the differential
e	subscript relative to an equivalent quantity
i, j, l, m, n	subscripts relative to clutch or shaft number (e.g., primary 1 or 2)
P	subscript relative to primary shaft
q	subscript relative to the engaged gear
r	subscript relative to gear
R	subscript relative to reverse gear
S	subscript relative to secondary shaft
th	subscript relative to hyperbolic tangent threshold
J	mass moment of inertia
T	torque
$T_{f,Pi}, T_{f,Si}$	friction torque on the ith primary or secondary shaft
$T_{sy,r}$	torque of the synchroniser of the rth gear
z_g	number of teeth of gear g
τ	transmission ratio
ω	angular speed
$\dot{\omega}$	angular acceleration

1 Introduction

In recent years, the ever increasing demand of vehicle fuel economy and passenger comfort has led to the development of new types of transmissions and new control technologies for powertrain systems. Dual clutch transmissions (DCT) represent an example of these efforts, since they allow obtaining torque transfer from one clutch to another without interrupting traction, thanks to the controlled slippage of the clutches. The two clutches are engaged alternatively in different gears and power transmission continues during a shift through the control of clutches torques. A shift process involves the engagement of the oncoming clutch and the disengagement of the off-going clutch.

From a kinematic point of view, gear shifting of a dual clutch transmission is similar to that of a clutch-to-clutch shift in a conventional automatic transmission (AT). However, the two types of transmissions show different dynamic characteristics since AT are equipped with torque converters that dampen shift transients. The results of existing researches on conventional AT cannot be readily applied to predict DCT shift behaviour. Moreover, precise torque control is required to achieve launch and shift smoothness of DCT vehicles due to the absence of both torque converter and one-way clutches.

As in any other control systems, the success of control depends on the analytical model that effectively describes the dynamics during system operation. Before a prototype is built, model simulation is the only tool for the analysis and evaluation of the performance of vehicles equipped with dual-clutch lay-shaft gearing transmissions. Moreover, model simulation plays an important role also in the validation and calibration of such systems, and has therefore attracted the interests from both academic and industrial communities.

Zhang et al. (2005) investigated the DCT dynamics and control during shift processes consequent to a given vehicle speed-time profile. Their model is implemented using the Modelica/Dymola® programming language in an object-oriented environment, and it is based on analytical formulations and look-up tables describing the powertrain behaviour. Synchronisers assemblies are modelled as switches for the power flow paths in different speeds: this choice is justified asserting that the shift quality is independent of the synchronisation of gears.

Goetz et al. (2005) propose control logic for upshift and downshift management; moreover also multiple gear shifts are discussed. Finally they present the dynamic effects of the gear preselection through conventional cone-type synchronisers on the overall shift quality.

A dynamic model focused on the control logic during shift manoeuvres has been presented by Kulkarni et al. (2007), who studied the variation in output torque in response to different clutch pressure profiles during shifts. In particular they presented a model based on two sets of dynamic equations depending on the clutches status, one valid for the operation with a specific gear and the other during shift. Each set of equations is treated as a matrix of elements and has one quantity derived from known values.

Recently, a dynamic analysis of dry dual clutch transmissions during vehicle launch and shifts, useful for DCT torque control and calibration, has been presented by Liu et al. (2009). They

underline the need of separated systems of equations to describe the powertrain dynamics because of the changes in power flow path and clutches status, but they only report few cases: launch, 1-2 upshift and 5-4 downshift. Moreover the simulation results are compared with experimental data obtained from a test vehicle.

In their study on the effect of pump selection on fuel economy, Ahlawata et al. (2010) develop a reduced lumped parameter model for DCT by treating gears as modulated transformer with losses. Also in this case synchronisers are represented as power flow switches.

Finally, a recent paper of Walker et al. (2010) deals with the role of integrated powertrain control of both engine and clutches in reducing shift transients for DCT with the inclusion of detailed hydraulic system models.

In the present paper, a mathematical model of DCT is presented, aiming at deriving the full sets of equations that describe the dynamic and kinematic behaviour of the driveline components, taking into account all the possible configurations that can take place due to various power flow paths: to the best of the authors' knowledge, the complete sets of equations have never been published. The system can possess from one to three degrees of freedom depending on the number of synchronisers simultaneously engaged, as shown in Section 3.

The analysis of each configuration is used to formulate a generalised version of the equations of motion considering also the effect of the synchronisers dynamics. A synthetic result able to cover all the possible transmission states is achieved using some dependent and independent indexes.

2 Working principle

The two clutches, that give the name to the transmission, can be single or multiple disk, dry or wet type, depending mainly on the amount of power they have to transfer and on the available room; they are mounted between the engine flywheel and one of the two coaxial input shafts of the transmission, one for odd gears ($P1$) and the other ($P2$) for even gears (Fig. 1).

Gearshift and engagement of clutches are electronically managed by a control unit, which drives the mechatronic assembly integrated in the gearbox.

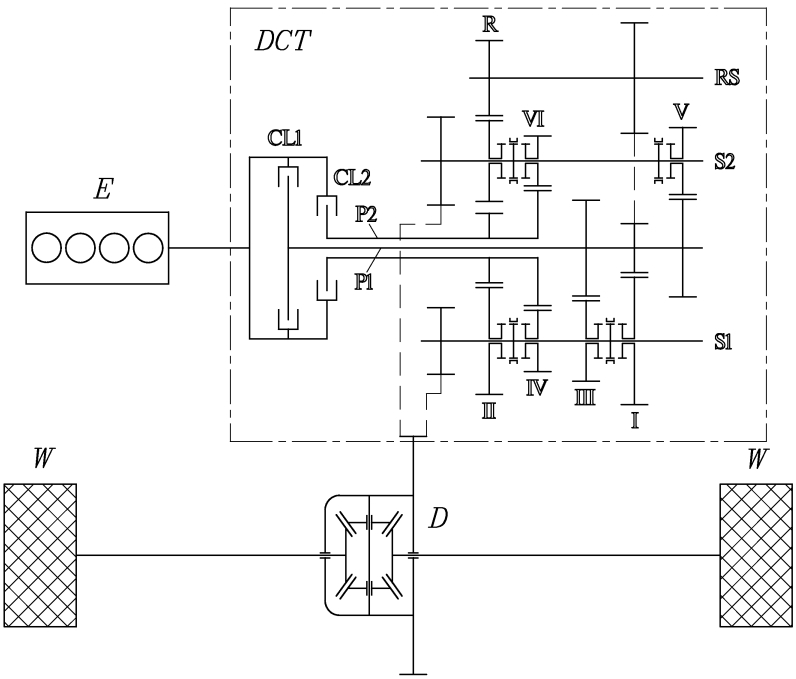

Figure 1: Diagram of a front wheel drive vehicle equipped with a dual clutch transmission.

During the internal combustion (IC) engine (E) start-up phase, the first gear is engaged and both clutches are open, so that no torque is transferred to the wheels. When the clutch $C1$ begins to engage, thanks to axial load acting on its disks, a progressive torque transfer to the gear set of the first gear takes place through the inner shaft $P1$. In the meantime, being the second clutch open, the second gear can be pre-selected if not already engaged; hence it is possible to engage the corresponding synchroniser in advance of the effective actuation of the gear that is accomplished

through the associated clutch $C2$. It is of interest noting that these operations do not damage the synchronisers or any other gearbox component; moreover the synchronisers are not mounted between two consecutive gears, as in traditional manual gearboxes, since the pre-selection of the following gear ratio has to take place when the present gear is still engaged and transmitting torque to the wheels.

The gear shift from first to second gear is automatically actuated by the electronic control unit (TCU) in a short time thanks to the concurrent disengagement of the first clutch and engagement of the second clutch, thus eliminating the dead times due to the traditional synchronising phase. Hence, this clutch-to-clutch shift allows not only to accomplish the gearshift, but also to have a continuous torque transfer to the wheels (power-shift) during the gear change process. Obviously a similar procedure is repeated when the engagement of the second gear is completed: the system gets ready to the following gear shift inserting the synchroniser corresponding to the next gear. It is easy to guess that this procedure is able to compensate for the typical dynamic limits of manual transmission (see, e.g., Lucente et al. (2007)), thus granting better performance in accelerating the vehicle and more comfortable driving in consequence of the continuous torque transmission during gear shifts.

In contrast to these evident advantages, DCT systems are more complex, both in their mechanical architecture and in the automatic handling of the gear change task. Furthermore, the presence of two clutches and of a grater number of bearings determines a reduced efficiency with respect to traditional manual or automated manual gearboxes; however, their efficiency is still greater than that of automatic transmissions with torque converters and continuously variable transmissions.

A distinctive characteristic of the DCT is represented by the fact that during normal operating conditions the dual clutch gearbox has two different gear ratios engaged at the same time: the TCU must avoid the concurrent lock of the two clutches in order to prevent damages to the gearbox.

3 Transmission model

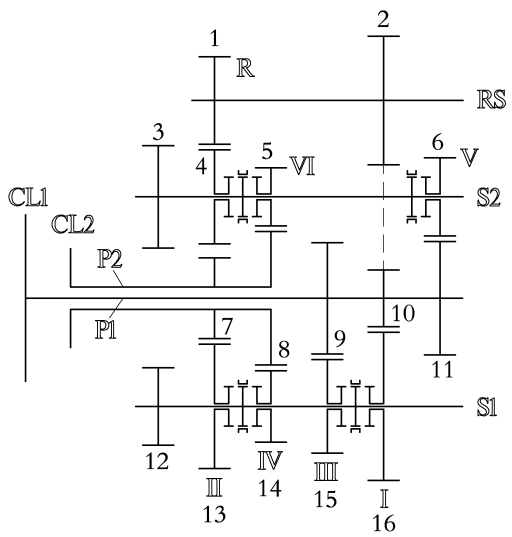

Figure 2: Layout of a DCT.

Fig. 2 shows the layout of a DCT mounted on a front wheel driven vehicle, with transversal IC engine and gearbox. All the gears of the transmission have an identification number which is used to specify the gear both in transmission ratios and moments of inertia calculations.

The DCT can present, during normal operation, different configurations corresponding to different power paths through the transmission. Considering the two clutches as inputs and differential ring gear as the output, the system can be classified based on the number of degrees of freedom, varying from three to zero depending on the number of the gears engaged.

The two clutches are not included in the DCT model, hence their status does not influence the total number of d.o.f. A specific twin clutch block, not presented in this paper, must be inserted between the engine and the DCT in order to run powertrain simulations.

3.1 General kinematics

Both secondary shafts are permanently in mesh with the differential ring gear through fixed ratios; hence their angular speeds are related through a kinematic constraint, regardless of the transmission status. Let define the transmission ratio conventionally as the ratio between the input and the output speed: $\tau = \omega_{in}/\omega_{out}$. The positive direction of rotation of the shaft is chosen so that all the computed speeds are positive during forward vehicle motion (see Fig.3 for the sign convention).

The transmission ratios between the two secondary shafts ($S1$ and $S2$) and the differential are respectively

$$\tau_{d1} = \frac{\omega_{S1}}{\omega_d} \quad \text{and} \quad \tau_{d2} = \frac{\omega_{S2}}{\omega_d}; \tag{1}$$

hence the ratio of the velocities of the secondary shafts is

$$\frac{\omega_{S1}}{\omega_{S2}} = \frac{\tau_{d1}}{\tau_{d2}}. \tag{2}$$

The reverse shaft (RS) speed can be calculated knowing the speed of the shaft $P1$ and the gear ratio $\tau_{R1} = z_2/z_{10}$; it holds:

$$\omega_{RS} = \frac{\omega_{P1}}{\tau_{R1}} \tag{3}$$

and consequently

$$\tau_{P1,R} = -\frac{z_2 z_4}{z_1 z_{10}} = \frac{\omega_{P1}}{\omega_{S2}} \quad \text{if } R \text{ is engaged} \tag{4}$$

The primary shaft velocities, on the other hand, can show different behaviour depending on the synchronisers intervention and so on the specific dynamic configuration.

In particular the number of the synchronisers effectively engaged reduces the total number of d.o.f. of the system. If no synchroniser is engaged, then the system has three d.o.f., while when one synchroniser is engaged the number of d.o.f. reduces to two; the system has a single d.o.f. when two synchronisers are engaged, one for each primary. Obviously, there could exist also a kinematically over-constrained configuration, i.e., when two gears are contemporaneously engaged on the same primary shaft: it is evident that this configuration has always to be avoided to prevent structural damages.

3.2 Equivalent moments of inertia

In order to develop the dynamic model of the analysed transmission system, it is useful to group in four equivalent mass moments of inertia all the inertial terms of the mechanical components, which rotation is constrained by kinematic relations. Let so define the four mass moments of inertia J_{P1}, J_{P2}, J_{S1} and J_{S2} that represent respectively the equivalent moments at inner primary shaft $P1$, outer primary shaft $P2$, secondary shaft $S1$ and secondary shaft $S2$:

$$\begin{aligned} J_{P1} = {} & J_{C1} + J_{s,P1} + J_9 + J_{10} + J_{11} + J_{15}\left(\frac{z_9}{z_{15}}\right)^2 + J_{16}\left(\frac{z_{10}}{z_{16}}\right)^2 + \\ & + J_6\left(\frac{z_{11}}{z_6}\right)^2 + \left[J_4\left(\frac{z_1}{z_4}\right)^2 + J_{s,RS} + J_1 + J_2\right]\left(\frac{z_{10}}{z_2}\right)^2 \end{aligned} \tag{5}$$

$$J_{P2} = J_{C2} + J_{s,P2} + J_7 + J_8 + J_{13}\left(\frac{z_7}{z_{13}}\right)^2 + J_{14}\left(\frac{z_8}{z_{14}}\right)^2 + J_5\left(\frac{z_8}{z_5}\right)^2 \tag{6}$$

$$J_{S1} = J_{s,S1} + J_{12} + J_{sy,I-III} + J_{sy,II-IV} \tag{7}$$

$$J_{S2} = J_{s,S2} + J_3 + J_{sy,V} + J_{sy,R-VI}. \tag{8}$$

As an example the equivalent moment of inertia J_{P1} at the primary shaft $P1$ is given by the sum of several contributions (see Fig.2): the clutch elements of $C1$ fixed to the shaft $P1$ (J_{C1}), the shaft itself ($J_{s,P1}$), the gears fixed to the shaft (J_9, J_{10}, J_{11}) and the ones (15, 16, 6) in mesh with them with a constant speed ratio (z_i/z_j), the reverse mechanism composed of the idle gear 4, the reverse shaft RS and the gears 1 and 2.

3.3 Synchronisers model

For simulation purposes, the synchronisers friction torque during transients can be conveniently computed with a hyperbolic tangent model:

$$T_{sy,r} = C_r T_r \tanh\left(3\frac{\Delta\omega_{sy,r}}{\Delta\omega_{th}}\right) \tag{9}$$

where $r = I, \ldots, VI$ or $r = R$ identifies the synchroniser, while $\Delta\omega_{sy,r}$ is the speed difference across the conic surfaces in relative motion:

$$\begin{cases} \Delta\omega_{sy,I} = \omega_{S1} - \omega_{P1}/\tau_I \\ \Delta\omega_{sy,II} = \omega_{S1} - \omega_{P2}/\tau_{II} \\ \Delta\omega_{sy,III} = \omega_{S1} - \omega_{P1}/\tau_{III} \\ \Delta\omega_{sy,IV} = \omega_{S1} - \omega_{P2}/\tau_{IV} \\ \Delta\omega_{sy,V} = \omega_{S2} - \omega_{P1}/\tau_V \\ \Delta\omega_{sy,VI} = \omega_{S2} - \omega_{P2}/\tau_{VI} \\ \Delta\omega_{sy,R} = \omega_{S2} + \omega_{P1}/\tau_R \end{cases} \tag{10}$$

T_r is the maximum dynamic friction torques of the specific synchroniser r and C_r is the non-dimensional control signal that limits the maximum friction torque, whose linear growth in time is imposed during the activation phase. $\Delta\omega_{th}$ is the hyperbolic tangent threshold that regulates in terms of relative speed the rate of transition from dynamic to static friction conditions.

At the end of the synchronisation phase, i.e., when the synchroniser is fully engaged:

$$|\Delta\omega_{sy,r}| < \Delta\omega_{th} \qquad \& \qquad C_r > 0, \tag{11}$$

a trigger signal enables a new set of dynamic equations characterised by a reduced number of d.o.f. The synchroniser model is then substituted by the kinematic relation of the engaged gear pair, e.g., $\omega_{P1}/\omega_{S1} = \tau_I$ for synchroniser I.

3.4 Three d.o.f.

The configuration with three d.o.f. corresponds to the neutral gear: since no gear is engaged, none of the secondary shafts can transfer engine power to the driving wheels.

With reference to Fig. 3 the dynamic equations describing the system are:

$$T_{C1} + \sum_{r=I,III,V} T_{P1,r} - T_{P1,R} - \left(T_{f,P1} + \frac{T_{f,RS}}{\tau_{R1}}\right) = J_{P1}\,\dot{\omega}_{P1} \tag{12}$$

$$T_{C2} + \sum_{r=II,IV,VI} T_{P2,r} - T_{f,P2} = J_{P2}\,\dot{\omega}_{P2} \tag{13}$$

and

$$-\sum_{r=I,II,III,IV} T_{sy,r} - T_{S1} - T_{f,S1} = J_{S1}\,\dot{\omega}_{S1} \tag{14}$$

$$-\sum_{r=V,VI,R} T_{sy,r} - T_{S2} - T_{f,S2} = J_{S2}\,\dot{\omega}_{S2}, \tag{15}$$

where, considering all the synchronisers mounted on the secondary shaft,

$$T_{P1,r} = \frac{T_{sy,r}}{\tau_{P1,r}}, \quad T_{P2,r} = \frac{T_{sy,r}}{\tau_{P2,r}} \quad \text{and} \quad T_{P1,R} = -\frac{T_{sy,R}}{\tau_{P1,R}}. \tag{16}$$

Under the hypothesis of null losses in the gearing, the torque available at the differential is

$$T_d = \tau_{d1} T_{S1} + \tau_{d2} T_{S2} - T_{f,d} - J_d\,\dot{\omega}_d. \tag{17}$$

Finally combining equations (14), (15), (17) and (1) it is possible to write the third equation that, together with (12) and (13), completely describes the dynamics of the three d.o.f. system:

$$\begin{aligned} T_d + \tau_{d1} \sum_{r=I,II,III,IV} T_{sy,r} + \tau_{d2} \sum_{r=V,VI,R} T_{sy,r} + T_{f,d} + \tau_{d1} T_{f,S1} + \\ + \tau_{d2} T_{f,S2} = -\left(J_{S1}\tau_{d1}^2 + J_{S2}\tau_{d2}^2 + J_d\right)\dot{\omega}_d. \end{aligned} \tag{18}$$

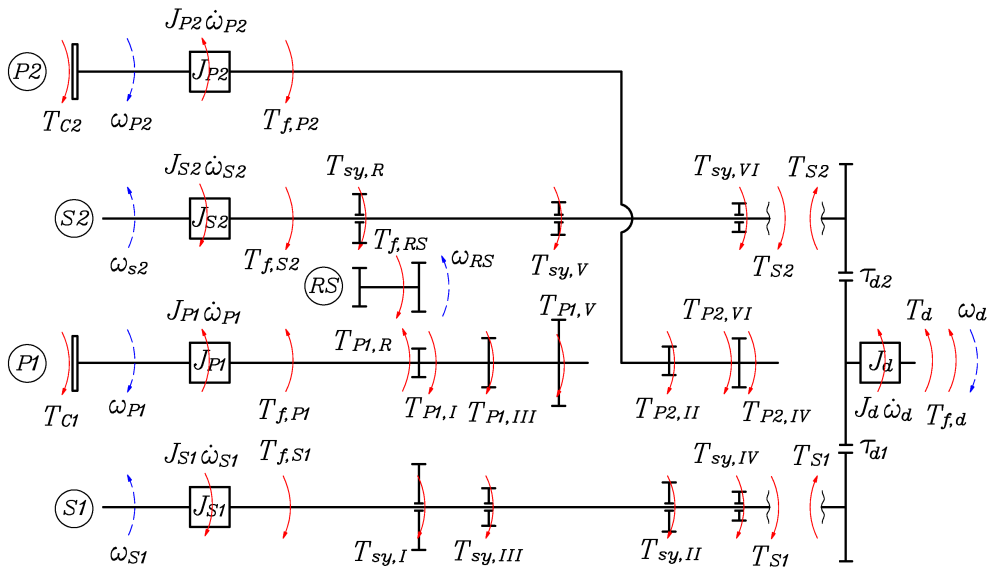

Figure 3: Free body diagram of the 3 d.o.f. configuration.

Using also kinematic eq. (1) and (3) all the angular velocities of the shafts (ω_{P1}, ω_{P2}, ω_{S1}, ω_{S2}, ω_{RS} and ω_d) can be determined for given values of the clutches and differential torques (T_{C1}, T_{C2} and T_d).

3.5 Two d.o.f.

In this configuration only one synchroniser in engaged; hence only two dynamic equations hold, while a new kinematic equation has to be written, linking the angular velocities of the shafts (a primary and a secondary) connected by the synchroniser.

Starting from the analysis of each possible case, it is convenient to summarise all the equations in a compact way using an indexed form. Table 1 shows the seven configurations, depending on the engaged gear Pi, q; hence each configuration can be identified by two independent indexes i and j (= 1 or 2), representing respectively the primary and secondary shaft (i.e., primary Pi is engaged with secondary Sj) and by two dependent indexes $m = 3 - j$ and $n = 3 - i$.

Table 1: Two d.o.f. configurations.

case	i	j	m	n	Pi, q	$G1$	$G2$	$G3$	$G4$
1	1	1	2	2	I	II, III, IV	V, VI, R	III, V, R	II, IV, VI
2					III	I, II, IV		I , V , R	
3	1	2	1	2	V	VI, R	I, II, III, IV	I, III, R	II, IV, VI
4					R	V, VI		I, III, V	
5	2	1	2	1	II	I, III, IV	V, VI, R	IV, VI	I, III, V, R
6					IV	I, II, III		II, VI	
7	2	2	1	1	VI	V, R	I, II, III, IV	II, IV	I, III, V, R

The dynamic equilibrium equations can be expressed as follows:

$$T_{Ci} + T_{sy\ e,Pi} - \frac{T_d}{\tau_{Pi,q}\tau_{dj}} - T_{fe,Pi} = J_{e,Pi}\,\dot{\omega}_{Pi} \tag{19}$$

$$T_{Cn} + \sum_{r=G4} \frac{T_{sy,r}}{\tau_{Pn,r}} - T_{fe,Pn} = J_{Pn}\,\dot{\omega}_{Pn}, \tag{20}$$

where the equivalent moment of inertia at the primary shaft is

$$J_{e,Pi} = J_{Pi} + \frac{J_{Sj}}{\tau_{Pi,q}^2} + \frac{J_d}{(\tau_{dj}\tau_{Pi,q})^2} + \frac{\tau_{dm}^2 J_{Sm}}{(\tau_{dj}\tau_{Pi,q})^2} \tag{21}$$

the equivalent friction torques due to bearings and/or seals $T_{fe,Pi}$ and $T_{fe,Pn}$ are

$$T_{fe,Pi} = T_{f,Pi} + \frac{T_{f,Sj}}{\tau_{Pi,q}} + \frac{T_{f,d}}{\tau_{dj}\tau_{Pi,q}} + \frac{\tau_{dm}T_{f,Sm}}{\tau_{dj}\tau_{Pi,q}} + (n-1)\frac{T_{f,RS}}{\tau_{R1}} \tag{22}$$

$$T_{fe,Pn} = T_{f,Pn} + (i-1)\frac{T_{f,RS}}{\tau_{R1}}. \tag{23}$$

Under the hypothesis to adopt a Coulomb friction model for these drag torques, the moduli in eq. (22) and (23) have to be multiplied by the sign (or hyperbolic tangent) of the shaft relative speed.

The equivalent synchronising torque is

$$T_{sy\ e,Pi} = -\frac{1}{\tau_{Pi,q}}\left(\sum_{r=G1} T_{sy,r} + \frac{\tau_{dm}}{\tau_{dj}}\sum_{r=G2} T_{sy,r}\right) + \sum_{r=G3}\frac{T_{sy,r}}{\tau_{Pi,r}} \tag{24}$$

Moreover the kinematic equations are

$$\left\{\begin{array}{c}\omega_{Sj}\\ \omega_d\\ \omega_{Sm}\end{array}\right\} = \left\{\begin{array}{c}\dfrac{1}{\tau_{Pi,q}}\\ \dfrac{1}{\tau_{Pi,q}\tau_{dj}}\\ \dfrac{\tau_{dm}}{\tau_{Pi,q}\tau_{dj}}\end{array}\right\}\omega_{Pi}. \tag{25}$$

As an example, Fig. 4 shows case 6, with the 4th gear engaged and the 3rd gear under synchronisation.

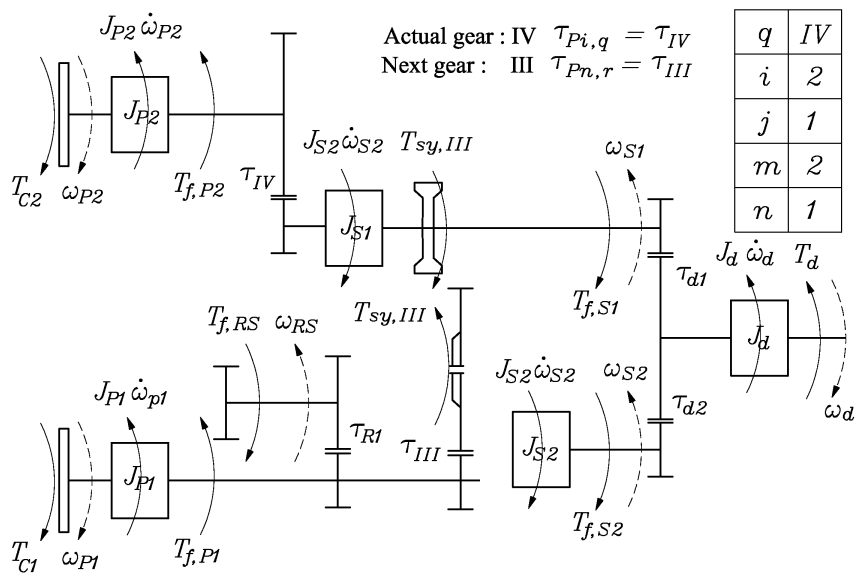

Figure 4: Free body diagram of a 2 d.o.f. configuration (case 6): synchronisation of the 3rd gear with the 4th gear engaged.

These configurations are particularly interesting, since they describe the transient of pre-selection of the following gear ratio; this situation occurs very often during normal DCT working conditions and it is typical of this gearbox architecture. In fact, after a gear has completely been engaged, the system must disengage the inactive gearing and synchronise the following, possibly before the request of a gear change from the driver or TCU. Moreover, in this configuration the power flows from the engine to the wheels through the actually engaged gear, while the primary not involved in the power flow can synchronise on a new gear ratio if the corresponding clutch is disengaged.

3.6 One d.o.f.

The single d.o.f. configuration takes place when two gears are engaged at the same time; obviously only one of the two clutches has to be completely closed. It is possible to highlight four different cases (see Table 2) described by two indexes: j and l (= 1 or 2).

Table 2: One d.o.f. configurations: primary $P1$ is engaged with secondary Sj, while primary $P2$ is engaged with secondary Sl.

case	j	l	$P1, q$	$P2, q$
8	1	1	I or III	II or IV
9	2	1	V or R	II or IV
10	1	2	I or III	VI
11	2	2	V or R	VI

The system is now completely described by the following dynamic equation:

$$T_{C1}\tau_{P1,q}\tau_{dj} + T_{C2}\tau_{P2,q}\tau_{dl} - T_d - T_{fe,d} = J_{e,d}\dot{\omega}_d \tag{26}$$

where the equivalent mass moment of inertia at the differential d is

$$J_{e,d} = J_{P1}\left(\tau_{P1,q}\tau_{dj}\right)^2 + J_{S1}\tau_{d1}^2 + J_{P2}\left(\tau_{P2,q}\tau_{dl}\right)^2 + J_{S2}\tau_{d2}^2 + J_d \tag{27}$$

and the synchroniser friction torque reduced to the differential is

$$T_{fe,d} = T_{f,P1}\tau_{P1,q}\tau_{dj} + T_{f,P2}\tau_{P2,q}\tau_{dl} + T_{f,S1}\tau_{d1} + T_{f,S2}\tau_{d2} + T_{f,d}. \tag{28}$$

The angular velocities of the shafts are described by the following equation:

$$\left\{\begin{array}{c}\omega_{S1}\\ \omega_{S2}\\ \omega_{P1}\\ \omega_{P2}\end{array}\right\} = \left\{\begin{array}{c}\tau_{d1}\\ \tau_{d2}\\ \tau_{P1}\tau_{dj}\\ \tau_{P2}\tau_{dl}\end{array}\right\}\omega_d. \tag{29}$$

Four scalar kinematic equations (29) are now necessary to solve the problem; the additional equation links the speeds of the two shafts connected to the second synchroniser. Hence it is possible to describe the transition phase from the active gear to the pre-selected one, without interrupting power transmission to the driving wheels, obtainable thanks to the clutch-to-clutch phase. These configurations are typical of the analysed transmission type: in fact two gear pairs are engaged at the same time. The engine power can reach the wheels following two different paths: the driving torque splits between the primaries proportionally to the torque transferred by the corresponding clutch.

4 Model description

The equations presented in the previous section are used to build a Matlab/ Simulink® DCT block that can be connected to existing vehicle models. Hence it is possible to run simulations aimed at analysing the dynamic behaviour of the entire system and the effectiveness of different control strategies for clutches and synchronisers actuation. It is important noting that the model does not contain the 3 d.o.f. set of equations because this working conditions should never occur in practical cases; in fact in this situation both the primary shafts are disconnected from the output shaft.

The DCT block is built using hybrid modelling techniques, i.e., using continuous models triggered by discrete events. In fact, the synchronisers, unavoidable on automated manual transmissions, cause discontinuities in the passage from synchronisation to engaged gear: the interaction of the shafts, initially due to friction, is then accomplished by the rigid contact of dog-teeth. Consequently it is not possible to build a unique dynamic model for the transmission that is able to describe all the possible operating conditions, unless introducing step variations of stiffness and/or damping parameters that would reduce the simulation speed of the model when the actual number of d.o.f. is less than the maximum.

The solution can be obtained by modelling the gearbox using different sets of dynamic equations, describing all the possible dynamic conditions, and a state machine that determines their activation in consequence of a particular event. The DCT model layout is depicted in Fig. 5: the input of

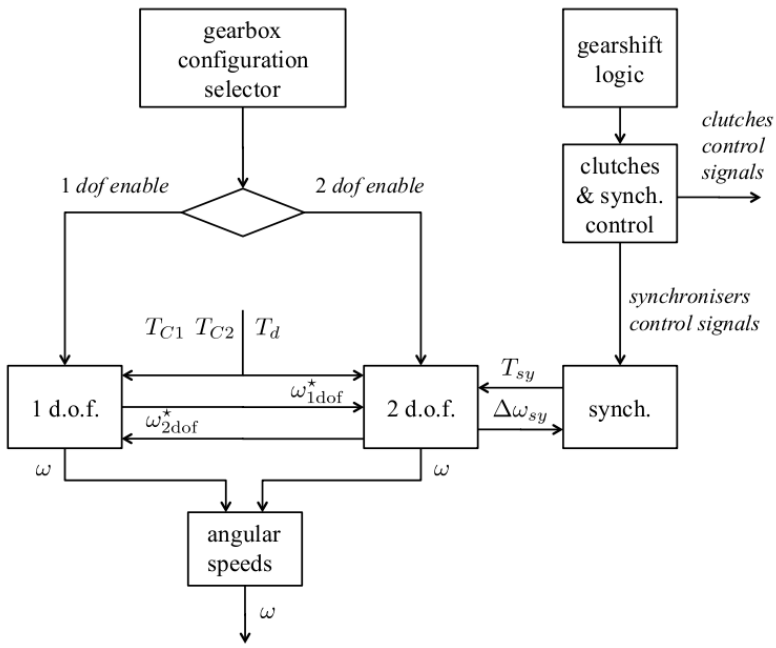

Figure 5: Flow chart for the external layer of the DCT model.

this block are clutches and differential torques, while the outputs are their speeds and clutches control signals. The gearshift logic block determines the gear shift state activation (both upshift and downshift) based on lookup tables depending on vehicle speed and accelerator pedal position signals (see e.g. Kulkarni et al. (2007)). Pre-selection of gear logic, synchronisers control signals generation and clutches control are accomplished in clutches and synchronisers control block. The clutches control during the gearshift transients, is based on open-loop profiles according to the clutch-to-clutch concept.

The gearbox configuration selector, implemented in Stateflow®, is used to enable the block containing the appropriate set of equations relative to the specific dynamic condition, i.e., 1 or 2 d.o.f. It is worth underlining that, when switching from one block to the other, the final speed values ($\omega^\star$) must be passed as initial conditions for all the integrators of the block to be activated. When 2 d.o.f. block is active the synchronisers block receives the vector of synchronisers speed differences $\Delta\omega_{sy}$ and returns the synchronisers torques T_{sy} computed according to the control signals calculated in the clutches and synchronisers control block.

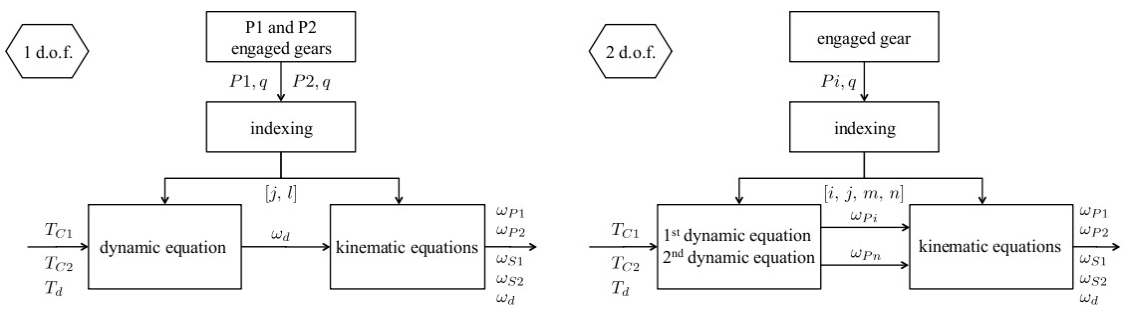

Figure 6: Model structure of 1 d.o.f. (left) and 2 d.o.f. (right) blocks.

Details of the 1 d.o.f. block are illustrated in Fig. 6 (left): the information of the engaged gears on primary shafts P1 and P2 are used to find indices j and l required to assign the specific values to the kinematic and dynamic equations (29÷26).

Similarly, Fig. 6 (right) describes the 2 d.o.f. block: the engaged gear Pi, g is the input for computing indices i, j, m and n, which in turn are used for determining the coefficients of equations (19), (20) and (25).

5 Numerical simulation

The DCT block is inserted into a vehicle model characterised by the following features: engine model described by a steady-state torque map as function of engine speed and accelerator pedal position; twin clutch model with nonlinear torsional dampers integrated in the clutch disks and friction torque computed according to LuGre model (Canudas et al. (1995)); half-shaft modelled as lumped elastic element; tyre forces calculated according to Pacejka's fully nonlinear model (Pacejka (2002)); 1 d.o.f. vehicle model with longitudinal load transfer.

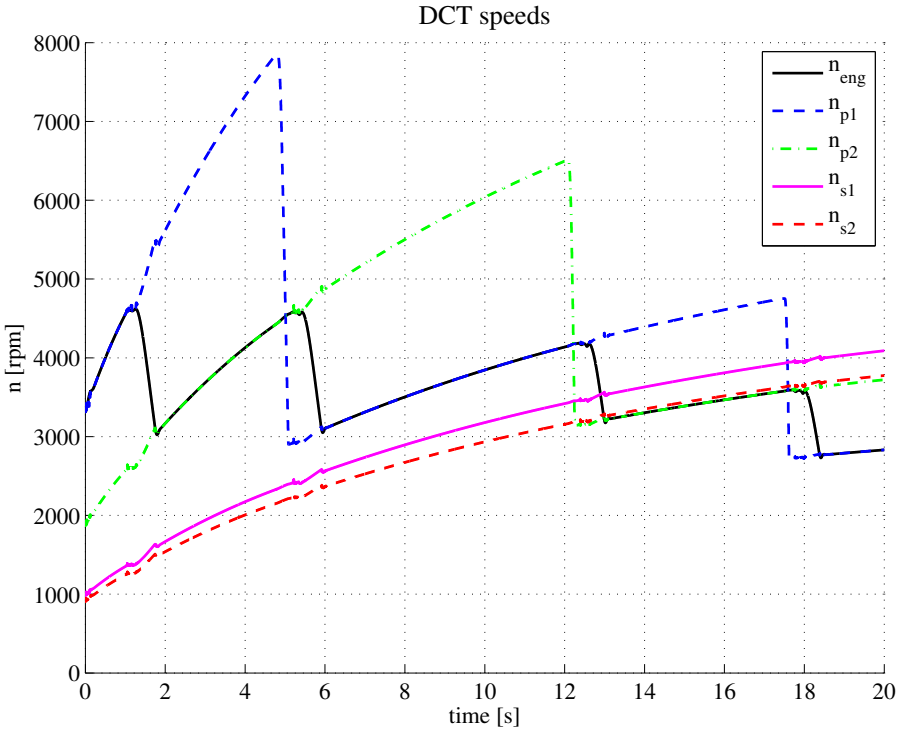

Figure 7: Engine, primary and secondary shafts angular velocities during vehicle acceleration from I to V.

Several manoeuvres consisting of repeated upshifts and downshifts have been used to test the validity of the presented sets of indexed equations and to verify the continuity during the passages between the different cases (see Tab.1 and 2). In particular, Fig. 7 shows the results relative to an acceleration manoeuvre from first to fifth gear at full throttle valve opening: it can be observed that engine speed during the fixed gear phase is alternatively equal to primary 1 or 2 and that the synchronisation anticipates the activation phase of the following gear ratio (gear pre-selection).

Considerable emphasis is placed on the effect of synchronisers model on the dynamic behaviour of the transmission. The model that considers the friction torque interaction between the shafts involved in the synchronisation phase (see eq. (9)) allows to smoothly handle the passage toward the next engaged gear. Synchronisers speed differences, as defined in eq. (10), during the synchronisations of the 3rd gear, are plotted in Fig. 8: it must be noted that while the synchronisers corresponding to even gears (mounted on the primary shaft P2) show substantially constant speed differences during this phase, the odd synchronisers modify their relative speeds according to the relating control signal.

On the contrary if the synchronisers are represented as simple switches that instantaneously change the gear ratio, the consequent variation of the kinetic energy, stored in the transmission inertial components, causes oscillations of the relative speeds $\Delta\omega_{sy}$. From Fig. 9 it is evident that neglecting the dynamics of the synchronisers leads to a sort of step excitation for the system; however the corresponding transient completely vanishes in a very short time (less than 0.1 s).

A comparison between the effect of the two models is depicted also in Fig. 10, where the torques T_1 and T_2 at the two primary shafts are plotted versus time. It is of interest noting that the torques at the primary shafts do not show any appreciable variations during the shift transient if the synchronisers are modelled as conic clutches. In the other case the torques undergo relevant oscillations, with a time history similar to the impulse response of a second order system.

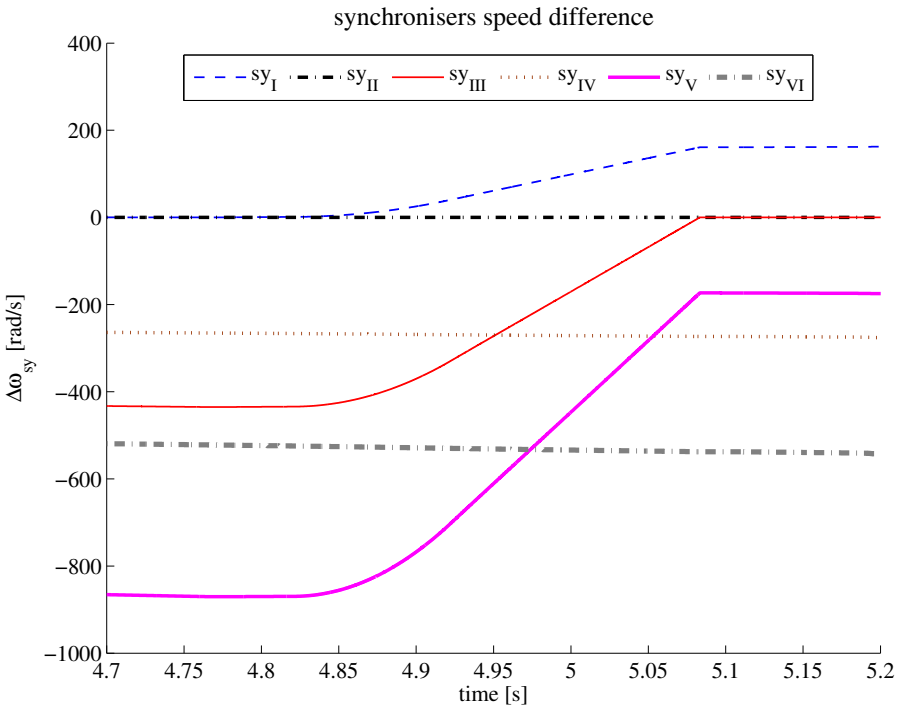

Figure 8: Synchroniser speed difference during 3rd gear synchronisation using a conic clutch synchroniser model.

6 Conclusions

In the paper a detailed model is presented for the quantitative analysis of a DCT kinematics and dynamics. The full sets of equations describing the dynamic and kinematic behaviour of the driveline components are written in a compact indexed form. The transmission model allows to analyse the performances for specified speed profiles and shift transients; moreover it also provides useful data on the dynamic transients, such as shift time, speed and torque variations associated with the shift process.

Finally some simulation results demonstrate the validity of the presented dynamic model and the importance of considering also the synchronisers dynamics aiming at a realistic description of the transmission dynamic behaviour. The effort put in modelling the synchronisers is justified also when the focus is on drivability since relevant oscillations in torques affect the vehicle longitudinal acceleration.

References

R. Ahlawata, H. K. Fathya, B. Leeam, J. L. Steina, D. Jungb, Modelling and simulation of a dual-clutch transmission vehicle to analyse the effect of pump selection on fuel economy, Vehicle System Dynamics 48 (7), 2010, pp.851–868

C. Canudas de Wit, H. Olsson, K.J. Åström, and P. Lischinsky, A new model for control of systems with friction, IEEE Trans. Automatic Control, 40 (3), 1995, pp.419–425

M. Goetz, M. Levesley, D. Crolla, Dynamics and Control of Gearshifts on Twin-Clutch Transmission, Proceedings of the institution of mechanical engineers, Part D: Journal of Automobile Engineering, 219, 2005, pp.951–963

M. Kulkarni, T. Shim, Y. Zhang, Shift dynamics and control of dual-clutch transmissions, Mechanism and Machine Theory 42, 2007, pp.168–182

Y. Liu, D. Qin, H. Jiang, Y. Zhang, A Systematic Model for Dynamics and Control of Dual Clutch Transmissions, ASME Journal of Mechanical Design 131, 2009, pp.061012

G. Lucente, M. Montanari, C. Rossi, Modelling of an automated manual transmission system, Mechatronics 17, 2007, pp.73–91

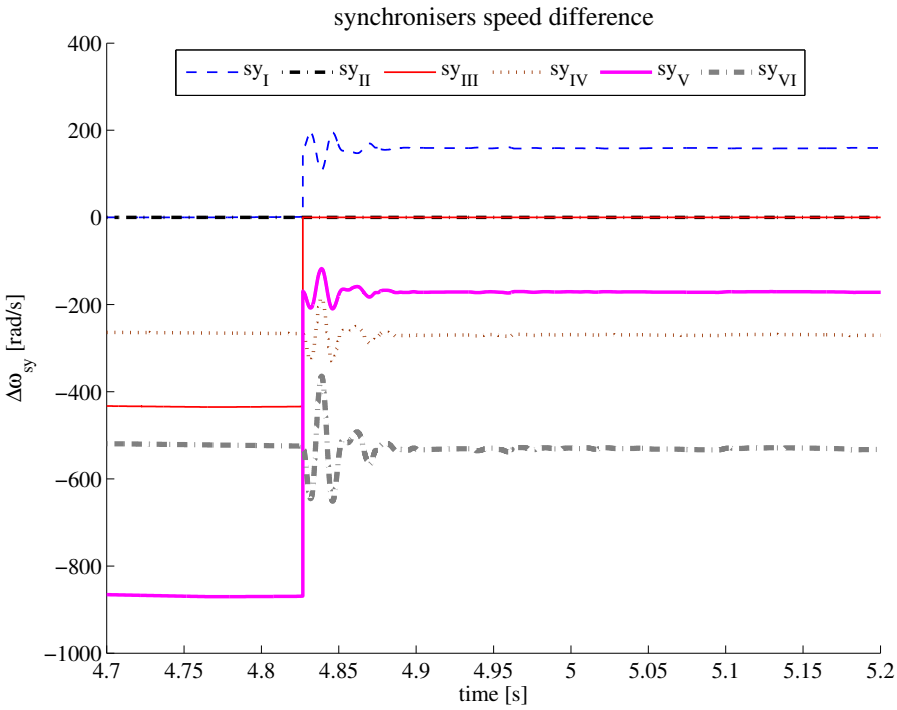

Figure 9: Synchroniser speed difference during 3rd gear synchronisation using a power flow switch synchroniser model.

H.B. Pacejka, Tyre and vehicle dynamics, Butterworth-Heinemann, Oxford, 2002

P.D. Walker, N. Zhang, R. Tamba, Control of gearshifts in dual clutch transmission powertrains, Mechanical Systems and Signal Processing, doi:10.1016/j.ymssp.2010.08.018

Y. Zhang, X. Chen, X. Zhang, H. Jiang, W. Tobler, Dynamic Modeling and Simulation of a Dual-Clutch Automated Lay-Shaft Transmission, ASME Journal of Mechanical Design 127, 2005, pp.302–307

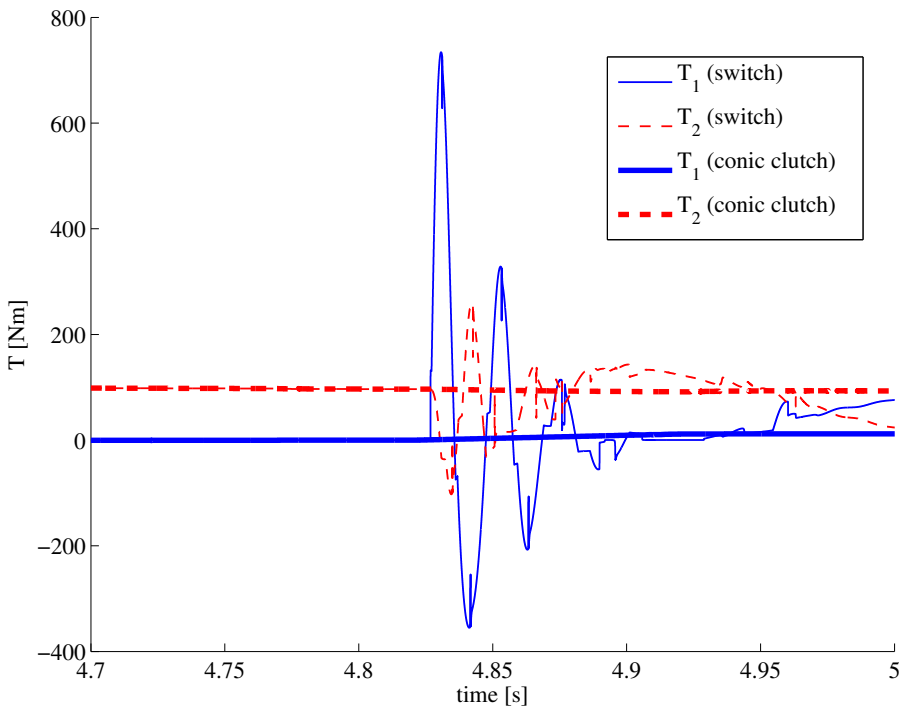

Figure 10: Torques on primary shafts during 3rd gear synchronisation: comparison between different synchroniser models.