POLITECNICO DI TORINO
Repository ISTITUZIONALE

Accuracy of a multiport network analyzer

Original
Accuracy of a multiport network analyzer / F., Sanpietro; Ferrero, ANDREA PIERENRICO; Pisani, Umberto; L., Brunetti. - In: IEEE TRANSACTIONS ON INSTRUMENTATION AND MEASUREMENT. - ISSN 0018-9456. - STAMPA. - 44:2(1995), pp. 304-307. [10.1109/19.377837]

Availability:
This version is available at: 11583/1400360 since:

Publisher:
IEEE

Published
DOI:10.1109/19.377837

Terms of use:

This article is made available under terms and conditions as specified in the corresponding bibliographic description in the repository

Publisher copyright

(Article begins on next page)

18 April 2024

Accuracy of a Multiport Network Analyzer

Ferdinando Sanpietro, Andrea Ferrero, *Member, IEEE,* Umberto Pisani, and Luciano Brunetti

***Abstract*— The accuracy of a multiport vector network analyzer, which uses a new calibration concept, has been compared with a 2-port network analyzer that implements the classical TRL procedure. The accuracy assessment is based on the analysis of the error propagation due to the connectors repeatability, both of the used standards and the measurands. The comparison, performed in the 2–18 GHz band on devices fitted with APC-7 mm connectors, proved the high accuracy reached by a multiport system which can qualify for metrological applications.**

I. Introduction

THE network analyzer (NWA) calibrations, based on particular error correction theories, are ineffective if the final measurement accuracy cannot be evaluated correctly. The overall accuracy depends on standard modeling, calibration algorithm efficiency, hardware stability, system nonlinearities and connector repeatabilities [1].

Accuracy assessments that exhaustively account for all the random and systematic errors were recently presented for an ordinary 2-port NWA [2], but as far as we know, multiport network analyzers (MNWA) are not considered yet.

This paper analyzes the error propagation in a multiport network analyzer by taking into account the connectors repeatability and the standard uncertainty. The former is generally considered as a random uncertainty (type A [3]), which can be reduced by averaging. Because the calibration error coefficients are also affected by the connectors repeatability of the standards, a type B uncertainty on the corrected data is introduced [4].

For each calibration algorithm the connectors repeatability uncertainty propagates in a different way: here we analyze the MNWA calibration technique recently proposed in [5]. In that paper a 3-port NWA was simply calibrated by means of 3 *thru* connections between the different ports and a sliding load at port 1, thus no air-lines, short-circuits, open-circuits or match standards were required.

Since the *thru* alone cannot provide information on the reference impedance value, the calibration algorithm imposes the characteristic impedance of the sliding load line as reference impedance for all the ports [5], [6]. Knowing the load mismatch is not required because the effective parameter is the characteristic impedance of the sliding load.

This calibration is adopted since it uses almost only *thru* standards, thus the connector repeatability plays the main role defining the error coefficients and the overall measurement accuracy; furthermore the algorithm can be simply applied to manage redundancy measurements for a least square solution of MNWA calibration.

From a different point of view, the error contribution of connector repeatability is indistinguishable from standard uncertainty. When other standards are used in place of a simple *thru*, this analysis is also applicable to the evaluation of the standard accuracy influence on the overall uncertainty.

The 3-port system accuracy is compared with a 2-port network analyzer that implements the classical TRL procedure [7]; the latter (HP8510C) is used at the Italian National Laboratory IEN "Galileo Ferraris" to disseminate the S-parameter standard and related quantities.

Manuscript received July 1, 1994; revised October 15, 1994.

F. Sanpietro, A. Ferrero, and U. Pisani are with Politecnico di Torino, Corso Duca degli Abruzzi 24, 10129 Torino, Italy.

L. Brunetti is with IEN Galileo Ferraris Strada delle Cacce 91, 10135 Torino, Italy.

IEEE Log Number 9408845.

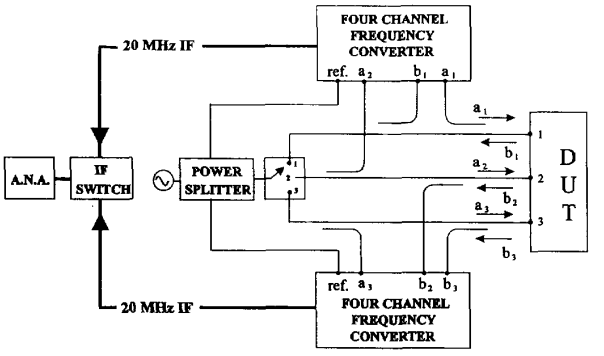

Fig. 1. 3-port MNWA hardware.

II. MNWA Hardware and Error Model

Fig. 1 shows the implemented 3-port system, which uses two commercial 4-channel frequency converters, that are phase synchronized in order to measure six traveling waves, defining the 3-port S matrix.

The APC-7 mm connectors are chosen to avoid gender problems, because the 3-port system is compared with a measurement system which exploits the best performances with the TRL calibration and the NMWA calibration uses mainly *thru* connections.

As developed in [8], the adopted MNWA error model is based on an ideal MNWA in cascade with 3 error boxes, as shown in Fig. 2. The error model on which the calibration theory is based is exact when it is assumed that no leakage exists between every port pair of the error network [8]; the same assumption is made in the TRL [7], [9] that is used at the IEN system.

0018–9456/95$04.00 © 1995 IEEE

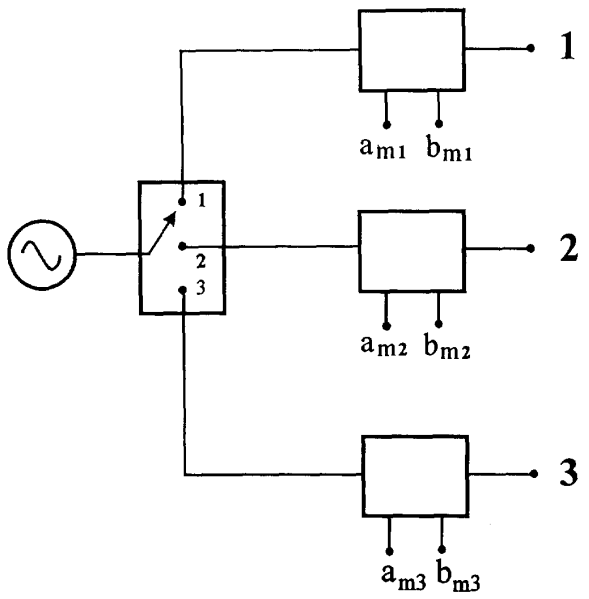

Fig. 2. 3-port error model.

Each error box is defined by a pseudo-scattering matrix $\boldsymbol{E}_i$, where $i = 1, 2, 3$:

$$\boldsymbol{E}_i = \begin{bmatrix} e_i^{00} & e_i^{01} \\ e_i^{10} & e_i^{11} \end{bmatrix} \tag{1}$$

while, after a proper switch correction procedure, the ideal MNWA measures the raw matrix $\boldsymbol{S}_m$ [8].

In a 3-port system we have the following error matrices:[1]

- $\boldsymbol{\Gamma}_{00} = \text{diag}\,(e_1^{00}, e_2^{00}, e_3^{00})$
- $\boldsymbol{\Gamma}_{01} = \text{diag}\,(e_1^{01}, e_2^{01}, e_3^{01})$
- $\boldsymbol{\Gamma}_{10} = \text{diag}\,(e_1^{10}, e_2^{10}, e_3^{10})$
- $\boldsymbol{\Gamma}_{11} = \text{diag}\,(e_1^{11}, e_2^{11}, e_3^{11})$
- $\boldsymbol{\Delta} = \boldsymbol{\Gamma}_{00}\boldsymbol{\Gamma}_{11} - \boldsymbol{\Gamma}_{01}\boldsymbol{\Gamma}_{10} = \text{diag}\,(\Delta_1, \Delta_2, \Delta_3)$
- $\boldsymbol{K} = e_1^{01}\boldsymbol{\Gamma}_{01}^{-1} = \text{diag}\,(1, k_2, k_3).$ (2)

After some matrix algebra it results that

$$\boldsymbol{K}\boldsymbol{\Gamma}_{00} + \boldsymbol{S}\boldsymbol{K}\boldsymbol{\Gamma}_{11}\boldsymbol{S}_m - \boldsymbol{S}\boldsymbol{K}\boldsymbol{\Delta} - \boldsymbol{K}\boldsymbol{S}_m = 0. \tag{3}$$

[1] There are 11 independent error coefficients and $\boldsymbol{K}_{11} = k_1 \stackrel{\text{def}}{=} 1$.

Equation (3), introduced in [5], can be considered as a system of nine equations as:[2]

$$\delta_{ij}k_i e_i^{00} + \sum_{q=1}^{n} S_{iq}k_q e_q^{11} S_{mqj} - S_{ij}k_j\Delta_j - k_i S_{mij} = 0 \qquad (i, j = 1, 2, 3). \tag{4}$$

Every standard measurement provides a certain number of equations similar to (4), e.g., one *thru* connection gives 4 equations, and therefore the calibration process is so reduced the solution of a linear system such as

$$\boldsymbol{N}\boldsymbol{u} = \boldsymbol{g}. \tag{5}$$

For a 3-port MNWA the calibration linear system (5) is formed at least by 11 linear independent equations similar to (4).

In [5], it was demonstrated that the calibration can be carried out by using the following standards: a sliding load connected with one of the three ports, and three *thru* connections, respectively, between ports 1 and 2, ports 1 and 3, and ports 2 and 3. Note that the number of overall equations given by this procedure is 13 but only 11 are linearly independent.

Vector $\boldsymbol{g}$ contains only either elements like S_{mij}, or zeros, while the matrix $\boldsymbol{N}$ contains also the standard S_{ij} parameters. The calibration coefficient vector $\boldsymbol{u}$ for the 3-port case is shown in (6) at the bottom of the page.

Once $\boldsymbol{u}$ is known the error coefficient matrices of (2) are straightforward and the corrected DUT $\boldsymbol{S}$ matrix becomes

$$\boldsymbol{S} = (\boldsymbol{K}\boldsymbol{\Gamma}_{00} - \boldsymbol{K}\boldsymbol{S}_m)(\boldsymbol{K}\boldsymbol{\Delta} - \boldsymbol{K}\boldsymbol{\Gamma}_{11}\boldsymbol{S}_m)^{-1}. \tag{7}$$

III. Accuracy Analysis

The MNWA calibration algorithm here summarized offers a powerful tool for a straightforward accuracy analysis. We consider the calibration process and how the accuracy on the error coefficient vector $\boldsymbol{u}$ can be increased by multiple standard connections, in other words we solve the calibration system (5) with an oversized set of equations in the least square sense. The extra equations can be given by different standards or by multiple connections of the same standard set without any limit in their number. Once the best estimate of $\boldsymbol{u}$ is obtained, the best estimate DUT $\boldsymbol{S}$ matrix is given by the de-embedding equation (7).

The analysis of (7) also includes a dispersion analysis on the DUT matrix $\boldsymbol{S}_m$ due to the connector repeatability during the measurement thus the obtained overall estimate of the uncertainty $d\boldsymbol{S}$ takes care both of the calibration and of the DUT measurement processes.

A. Accuracy on the Error Coefficient Vector $\boldsymbol{u}$

As it was evidenced in [5], eleven independent equations like (4) are necessary to provide the coefficient vector $\boldsymbol{u}$. This

[2] In general n^2 equations for an n-port.

$$\boldsymbol{u} = [e_1^{00} \quad k_2 e_2^{00} \quad k_3 e_3^{00} \quad e_1^{11} \quad k_2 e_2^{11} \quad k_3 e_3^{11} \quad \Delta_1 \quad k_2\Delta_2 \quad k_3\Delta_3 \quad k_2 \quad k_3]^T \tag{6}$$

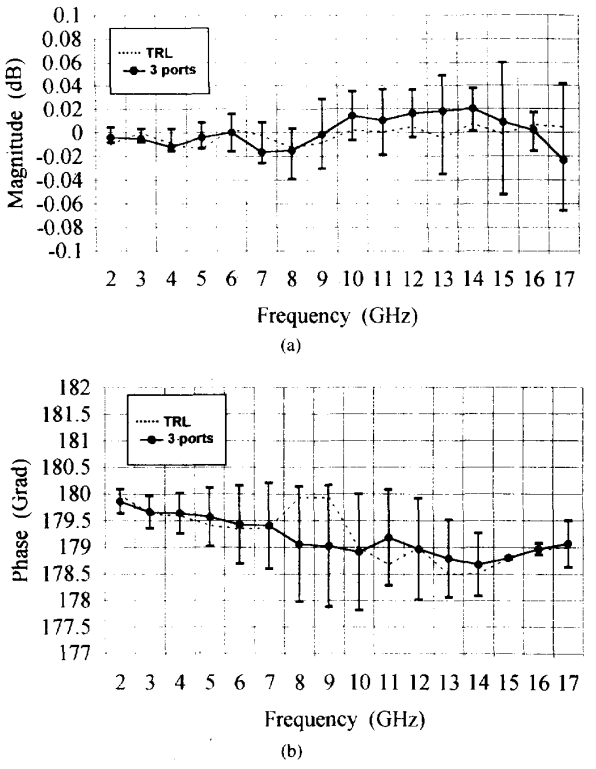

Fig. 3. Fixed short reflection coefficient.

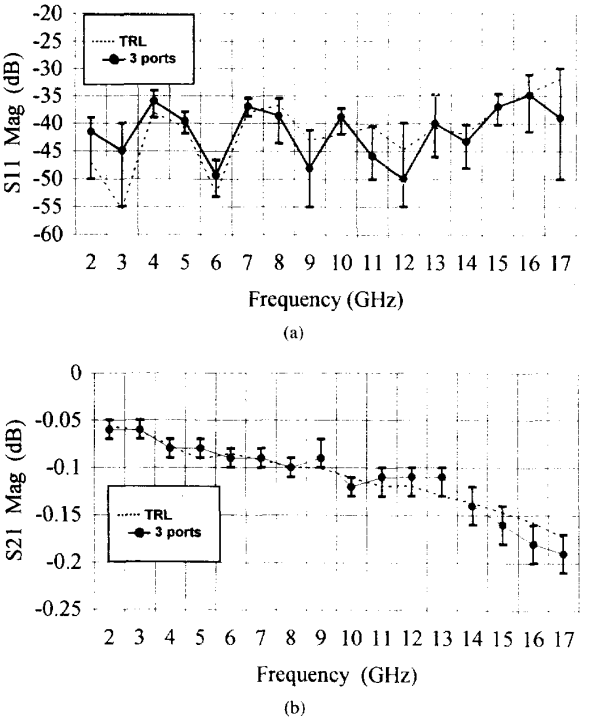

Fig. 4. 20 cm coaxial airl ine S-parameters.

set was originally given by three different *thru* connections between three ports (1-2, 1-3, 2-3) and by a single one port sliding load procedure. Here we perform multiple connections of the *thru* (10 times at each port pair) and three sliding load procedures at port 1. In this way we get an oversized linear system which brings out some useful interesting properties of the calibration models. Of course other standards can be used to oversize the linear system, but here we want to point out the influence of connectors repeatability.

The matrix $\boldsymbol{N}$ now has m (number of taken equations) rows and eleven columns (error coefficients); since each measurement is affected by noise, the best estimate of $\boldsymbol{u}$ is given by a weighted average rather than simply data averaging [4], [2].

The system (5) is defined as a noisy system by introducing a noise vector $\boldsymbol{v}$ as follows:

$$\boldsymbol{N}\boldsymbol{u} = \boldsymbol{g} + \boldsymbol{v} \tag{8}$$

where $\boldsymbol{v}$ is a random vector whose expected value is zero, thus avoiding systematic errors. The least squares estimate of $\boldsymbol{u}$ labeled $\hat{\boldsymbol{u}}$ is [10]

$$\hat{\boldsymbol{u}} = \boldsymbol{N}^{+}\boldsymbol{g} \tag{9}$$

where

$$\boldsymbol{N}^{+} = (\boldsymbol{N}^{T}\boldsymbol{N})^{-1}\boldsymbol{N}^{T} \tag{10}$$

is the Moon-Penrose matrix, while the estimated variance of $\boldsymbol{u}$ is [10]

$$\widehat{\sigma^2} = \frac{1}{m-11}\boldsymbol{g}^{T}(\boldsymbol{I} - \boldsymbol{N}\boldsymbol{N}^{+})\boldsymbol{g}. \tag{11}$$

Assuming uncorrelated measurements, the associated covariance matrix

$$\boldsymbol{V} = \sigma^2(\boldsymbol{N}^{T}\boldsymbol{N})^{-1} \tag{12}$$

should be diagonal, and its elements represent the accuracy of each 2-sigma error coefficient as

$$du_i = 2\sqrt{V_{ii}} \quad (i = 1, \cdots, 11). \tag{13}$$

Once $\hat{\boldsymbol{u}}$ [from (9)] and $d\boldsymbol{u}$ [from (13)] are computed, the matrices $\boldsymbol{K}$, $\boldsymbol{\Delta}$, and $\boldsymbol{\Gamma}_{ii}$ and their uncertainties $d\boldsymbol{K}$, $d\boldsymbol{\Delta}$, and $d\boldsymbol{\Gamma}_{ii}$ are obtained simply by rearranging the elements of $\hat{\boldsymbol{u}}$ and $d\boldsymbol{u}$ according to the definition (2).

B. Error Propagation

In order to complete the error analysis, we consider a set of ten different DUT connections from which we compute the average $\overline{\boldsymbol{S}}_m$ and its uncertainty $d\overline{\boldsymbol{S}}_m = 2\sigma_{S_m}$.

The best estimate of the DUT $\boldsymbol{S}$ matrix is given by deembedding (7) applied to $\overline{\boldsymbol{S}}_m$ and $\hat{\boldsymbol{u}}$, while the overall uncertainty is obtained by differentiating (3) as

$$d(\boldsymbol{K}\boldsymbol{\Gamma}_{00}) + d\boldsymbol{S}(\boldsymbol{K}\boldsymbol{\Gamma}_{11}\overline{\boldsymbol{S}}_m) + \boldsymbol{S}d(\boldsymbol{K}\boldsymbol{\Gamma}_{11})\overline{\boldsymbol{S}}_m + \boldsymbol{S}\boldsymbol{K}\boldsymbol{\Gamma}_{11}d\overline{\boldsymbol{S}}_m - d\boldsymbol{S}(\boldsymbol{K}\boldsymbol{\Delta}) - \boldsymbol{S}d(\boldsymbol{K}\boldsymbol{\Delta}) - d\boldsymbol{K}\overline{\boldsymbol{S}}_m - \boldsymbol{K}d\overline{\boldsymbol{S}}_m = 0 \tag{14}$$

thus

$$d\boldsymbol{S} = [-d(\boldsymbol{K}\boldsymbol{\Gamma}_{00}) - \boldsymbol{S}d(\boldsymbol{K}\boldsymbol{\Gamma}_{11})\overline{\boldsymbol{S}}_m + \boldsymbol{S}d(\boldsymbol{K}\boldsymbol{\Delta}) + d\boldsymbol{K}\overline{\boldsymbol{S}}_m + (\boldsymbol{K} - \boldsymbol{S}\boldsymbol{K}\boldsymbol{\Gamma}_{11})d\overline{\boldsymbol{S}}_m][\boldsymbol{K}\boldsymbol{\Gamma}_{11}\overline{\boldsymbol{S}}_m - \boldsymbol{K}\boldsymbol{\Delta}]^{-1}. \quad (15)$$

IV. Experimental Verification

To verify the calibration accuracy and the overall MNWA uncertainty, ten measurements on each 2-port and 1-port traveling standards were made, both with the IEN system and the 3-port NWA. Each of these measurements is the mean value of 1024 sampling data directly averaged by the NWA to get rid of the noise floor, thus we can reasonably assume that the results are mainly influenced by the connectors repeatability. Each of the following figures reports the best estimate S-parameter given by the MNWA, the mean value given by the ten measurements of the same parameter from the IEN 2-port system, and finally the 3-port error bars computed by means of (15).

In Fig. 3 the reflection coefficient of a fixed short is presented while Fig. 4 shows some S-parameters of a 20 cm coaxial air-line. The results are in good agreement even if the high reflective measurement appears to be less accurate. The line measurements give a further confirmation of the agreement between the National S-parameter System and the MNWA: we have a great dispersion on well matched reflection parameters due to very low signal levels (< -40 dB), but the IEN value is inside the computed error bar. Since none of the measurements exhibits residual bias, we conclude that no great discrepancies exist between the reference impedances of the two systems. We omit considering a 3-port device since there are no 3-port commercial standards available and since no comparison with the National IEN 2-port system is possible.

V. Conclusion

A first experimental evaluation of a multiport network analyzer accuracy is presented. The error formulation includes the uncertainties of both calibration coefficients and DUT measurements. The experimental results confirm the adopted approach and show that the MNWA global uncertainty is comparable with the National 2-port measurement system.

References

[1] "HP 8510B System Manual," Santa Rosa, CA, July 1987.
[2] H. Van Hamme and M. Vanden Bossche, "Flexible vector network analyzer calibration with accuracy bounds using an 8-term or a 16-term error correction model," *IEEE Trans. Microwave Theory Tech.*, vol. 42, pp. 976–987, June 1994.
[3] "Guide to the expression of uncertainty in measurements," *Joint Publication of ISO, IEC, OIML, BIPM*, 1992.
[4] R. B. Marks, "A multiline method of network analyzer calibration," *IEEE Trans. Microwave Theory Tech.*, vol. 39, pp. 1205–1215, July 1991.
[5] A. Ferrero, F. Sanpietro, and U. Pisani, "Accurate coaxial standard verification by multiport vector network analyzer," *1994 IEEE MTT-S Digest*, vol. 3, San Diego, June 1994, pp. 1365–1368.
[6] R. B. Marks and D. F. Williams, "A general waveguide circuit theory," *J. of Research of the National Institute of Standards and Technology*, vol. 97, no. 5, pp. 533–561, Sept. 1992.
[7] G. F. Engen and C. A. Hoer, "Thru-reflect-line: An improved technique for calibrating the dual six-port automatic network analyzer," *IEEE Trans. Microwave Theory Tech.*, vol. MTT-27, no. 12, pp. 987–993, Dec. 1979.
[8] A. Ferrero, U. Pisani, and K. J. Kerwin, "A new implementation of a multiport automatic network analyzer," *IEEE Trans. Microwave Theory Tech.*, vol. 40, pp. 2078–2085, Nov. 1992.
[9] H. J. Eul and B. Schiek, "A generalized theory and new calibration procedures for network analyzer self-calibration," *IEEE Trans. Microwave Theory Tech.*, vol. 39, pp. 724–731, Apr. 1991.
[10] R. J. Magnus and H. Neudecker, *Matrix Differential Calculus*. New York: Wiley, 1988.