POLITECNICO DI TORINO
Repository ISTITUZIONALE

Niobium Pentaoxide Thin-Film Gas Sensor for Portable Acetone Sensing

Original
Niobium Pentaoxide Thin-Film Gas Sensor for Portable Acetone Sensing / Lombardo, L.; Grassini, S.; Parvis, M.; Donato, N.; Gullino, A.. - ELETTRONICO. - (2021), pp. 317-320. (Intervento presentato al convegno 15th International Conference on Advanced Technologies, Systems and Services in Telecommunications, TELSIKS 2021 tenutosi a Nis, Serbia nel 20-22 October 2021) [10.1109/TELSIKS52058.2021.9606325].

Availability:
This version is available at: 11583/2971632 since: 2022-09-26T10:00:52Z

Publisher:
Institute of Electrical and Electronics Engineers Inc.

Published
DOI:10.1109/TELSIKS52058.2021.9606325

Terms of use:

This article is made available under terms and conditions as specified in the corresponding bibliographic description in the repository

Publisher copyright
IEEE postprint/Author's Accepted Manuscript

©2021 IEEE. Personal use of this material is permitted. Permission from IEEE must be obtained for all other uses, in any current or future media, including reprinting/republishing this material for advertising or promotional purposes, creating new collecting works, for resale or lists, or reuse of any copyrighted component of this work in other works.

(Article begins on next page)

12 October 2024

© 2021 IEEE. Personal use of this material is permitted. Permission from IEEE must be obtained for all other uses, in any current or future media, including reprinting/republishing this material for advertising or promotional purposes, creating new collective works, for resale or redistribution to servers or lists, or reuse of any copyrighted component of this work in other works.

Niobium Pentaoxide Thin-Film Gas Sensor for Portable Acetone Sensing

Luca Lombardo
Dipartimento di Elettronica e Telecomunicazioni, Politecnico di Torino, Torino, ITALY
Sabrina Grassini
Dipartimento di Scienza Applicata e Tecnologia, Politecnico di Torino, Torino, ITALY
Marco Parvis
Dipartimento di Elettronica e Telecomunicazioni, Politecnico di Torino, Torino, ITALY
Nicola Donato
Dipartimento di Ingegneria, Università degli Studi di Messina, Messina, ITALY
Alessio Gullino
Dipartimento di Elettronica e Telecomunicazioni, Politecnico di Torino, Torino, ITALY

DOI: 10.1109/TELSIKS52058.2021.9606325

Niobium Pentaoxide thin-film gas sensor for portable acetone sensing

Luca Lombardo, Sabrina Grassini, Marco Parvis, Nicola Donato and Alessio Gullino

***Abstract*—Acetone gas sensing finds application in several fields such as biomedical applications, food industry, chemical manufacturing and environmental monitoring. Often, such applications require good sensing performance and portability of the sensing devices. This paper proposes a conductometric gas sensor based on a thin-film of Nb_2O_5 able to detect acetone at the sub-ppm level with good selectivity and repeatability. The quite small dimensions and the low power consumption make the proposed sensor suitable for portable applications.**

***Index Terms*—gas sensors, biosensors, biochemical applications, niobium oxide thin-film, nano-structured materials.**

I. INTRODUCTION

The possible applications of gas sensors [1], [2] are virtually endless. Environmental monitoring [3], biomedical applications, industry and safety monitoring are just few examples of their possible employments.

Acetone is an organic volatile compound (VOC) used in several industrial processes, in food industry and in the manufacturing of cosmetics and paints. Moreover, acetone sensing can be employed in biomedical applications, such as the breath analysis test for diabetes monitoring [4], [5]. Therefore, the availability of effective gas sensors for acetone is very important, and several solutions were proposed in last years [6], [7].

Metal oxide (MOX) gas sensors are a possible solution for gas monitoring [8]. These sensors can be manufactured at a low-cost and their structure is suitable for miniaturization of the devices, a factor that is extremely important in portable and low-power applications. Moreover, the sensing performance and the target gas of this type of sensors can be widely modified acting on the sensing material, which is typically a metal oxide compound deposited over the sensor electrodes in the form of thick or thin layer. The recent developments of nano-structured materials is quickly improving the performance of such sensors, especially in terms of sensitivity and selectivity, making them a good and flexible solution for a wide range of gas sensing applications [9]–[13].

L. Lombardo, M. Parvis and A. Gullino are with the Department of Electronics end Telecommunications, Politecnico di Torino, Torino - Italy.
S. Grassini is with the Department of Applied Science and Technology, Politecnico di Torino, Torino - Italy.
N. Donato is with the Department of Engineering, University of Messina, Messina - Italy.

978-1-6654-4442-2/21 /$31.00 © 2021 IEEE

The sensing mechanism of MOX sensors is generally well understood [14]–[16], and it is based on the presence of vacancies and broken bonds on the sensing film surface. Such defects act as bonding sites for the gas molecules with the consequent modification of the band structure of the material. Therefore, the conductivity and the sensing film resistance change as consequence of the interaction between the bonding sites and the gas molecules. Typically, the sensor response S is defined as the ratio between R_a and R_g, which are respectively the sensor resistance in pure air and the sensor resistance in the presence of the target gas:

$$S = \frac{R_a}{R_g} \tag{1}$$

Therefore, it is quite easy to interface such types of sensors due to the fact that the readout circuit can be implemented by a simple resistance measurement system [17].

Among the several materials which can be employed for these category of gas sensors, the niobium oxide is a material not frequently employed and whose performance are still not fully assessed. Therefore, the authors decided to better assess the possibility to employ such a material for the development of an acetone gas sensor depositing by reactive plasma sputtering a Nb_2O_5 thin film deposited over a commercial alumina substrate. The proposed sensor was characterized by several preliminary tests and it demonstrated good sensing performance and low power consumption.

II. SENSOR MANUFACTURING

The proposed sensor was realized starting from a commercial alumina substrate, shown in Fig. 1, featuring quite small dimensions of $6\ \mathrm{mm} \times 3\ \mathrm{mm}$ and thickness of $1\ \mathrm{mm}$. A couple of platinum interdigitated electrodes which are used to electrically connect the sensing film is deposited on the front side of the substrate. A Pt heater is instead printed on the back side. The heater, which has a typical resistance of about $5\ \Omega$ at room temperature, is employed to heat the sensor to a specified working temperature that can reach a maximum of $500\,^{\circ}\mathrm{C}$.

The Nb_2O_5 film was deposited over the interdigitated electrodes covering an area of about $9\ \mathrm{mm}^2$ using deposition parameters similar to the ones already employed in other sensors [18]. The film was deposited by reactive plasma sputtering employing a lab-scale capacitively coupled parallel-plate reactor powered by a $13.56\ \mathrm{MHz}$ RF generator. A niobium target (purity 99.99%) was employed as cathode electrode and the deposition chamber was fed by an oxidative atmosphere

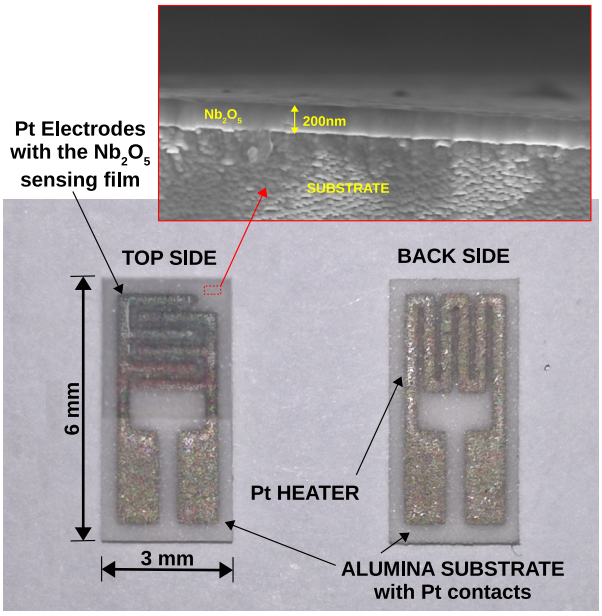

Fig. 1. Structure of the proposed acetone sensor composed by a commercial alumina substrate and a Nb_2O_5 sensing film deposited over the Pt Interdigitated Electrodes. In the detail it is visible the cross section of the deposited film obtained by FESEM Microspopy.

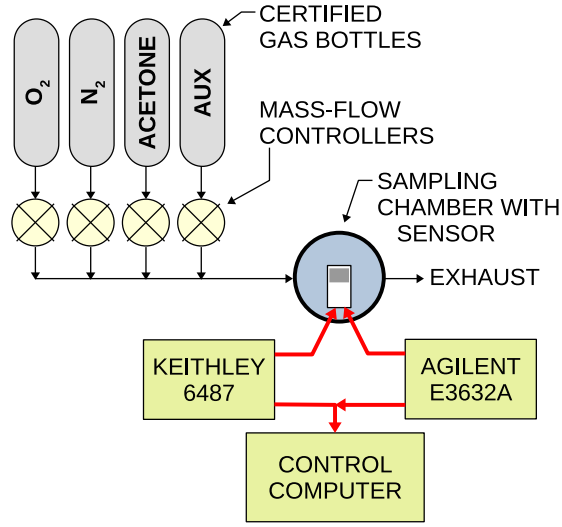

Fig. 2. Block diagram of the measurement setup employed for the sensor characterization.

composed by Ar (purity 99.99%) and O_2 (purity 99.99%) respectively at 50 sccm and 20 sccm (1 sccm = 1690 cm^3/s at 1 atm and 273 K). The sensing film was deposited over the substrate by using a alumina mask to cover the electrical contacts. The deposition was carried out for 30 min with a RF power of 250 W.

III. EXPERIMENTAL SENSOR VALIDATION

The sensing material deposited on the substrates was firstly characterized in terms of film morphology and chemical composition by means of Field Emission Scanning Electron Microscopy (FESEM, Zeiss Supra 40) and X-ray Photoelectron Spectroscopy (XPS, PHI Model 5000). As visible in the detail of Fig. 1, the characterization revealed a quite porous flat film mainly composed by Nb_2O_5 with a film thickness of about 200 nm.

After the material characterization, several measurements were carried out in order to assess the sensing performance of the sensors towards acetone. In particular, sensitivity, response and recovery time, selectivity and repeatability of the realized sensors were investigated.

A dedicated workbench was arranged with the aim of simplifying and automatizing most of the required operations. The block diagram of the measurement setup is shown in Fig. 2. A digitally-controlled power supply (Agilent, Model E3632A) was used to power the sensor heater and, at the same time, to measure current, voltage and, therefore, the resistance of the heater itself. An empirical relation is then employed to evaluate the sensor working temperature from the measured resistance. The power supply is controlled by a computer and a dedicated application which controls the sensor working temperature with an uncertainty of about 2% by using a PID algorithm. The application also interfaces a source-meter (Keithley, Model 6487) which is able to measure the sensing film resistance in a quite wide range reaching values up to few gigaohms with an uncertainty lower than 0.2%.

The sensor under test was placed in a tiny sampling chamber connected to a set of valves and mass-flow controllers (Bronkhorst, Type F-201C-FAC-22-V) which are able to provide a constant flux (about 100 ml/min) of the measurement gas mixture inside the sampling chamber by mixing the primary gases from certified gas bottles. In particular, all tests were carried out by using dry synthetic air (20% O_2, 80% N_2) as carrier gas, mixed with the proper amount of the target gas required to achieve a specified concentration.

A. Characterization of the sensor working temperature and response time

A first test was carried out with the aim of finding the best working temperature for the sensor. The sensor was placed inside the sampling chamber and cleaned in dry air for 2 h at 400 °C in order to remove any contaminant and stabilize the sensing film resistance.

Then, acetone was added to the carrier gas in pulses with a concentration of 5 ppm changing the sensor working temperature in the range from 200 °C to 400 °C. The sensor response was therefore calculated at all the tested temperatures and the acquired data are shown in Fig. 3. It is clearly visible how the sensitivity of the proposed sensor increases as the working temperature increases. The best sensor response is reached around a working temperature of 350 °C and it starts decreasing as temperature further increases. Instead, the sensor baseline resistance R_a decreases when temperature increases assuming a value of about 1 GΩ at the temperature of 350 °C.

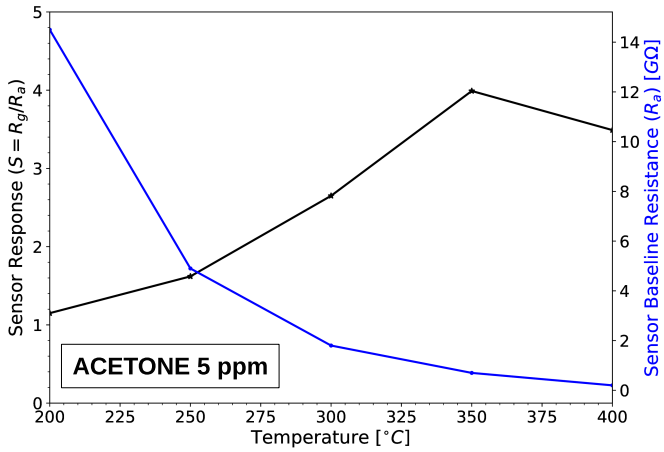

Fig. 3. Sensor sensitivity and sensor baseline resistance as function of the working temperature in the range from 200 °C to 400 °C.

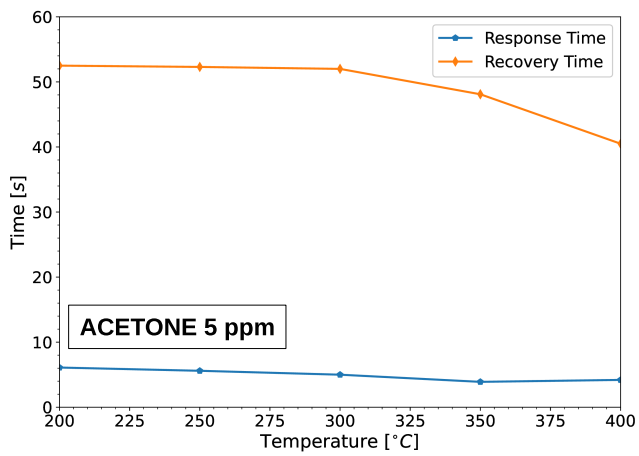

Fig. 4. Response and recovery time achieved by the proposed sensor in the temperature range from 200 °C to 400 °C.

A second test was carried out to characterize the response time of the sensor. Acetone pulses at a concentration of 5 ppm were injected in the sampling chamber recording the sensor response at different temperatures. Therefore, the response time and the recovery time of the sensor was evaluated considering the thresholds of 10% and 90% of each response pulse. The extracted data, shown in Fig. 4, highlight how both response and recovery time slightly decrease when the working temperature increases. In particular, at the temperature of 350 °C, the response time is about 5 s and the recovery time is lower than 50 s. Moreover, only a small improvement of about 10 s occurs for the recovery time when the temperature increases to 400 °C. Therefore, a temperature of 350 °C was selected as best trade-off between sensitivity, response/recovery time and power consumption.

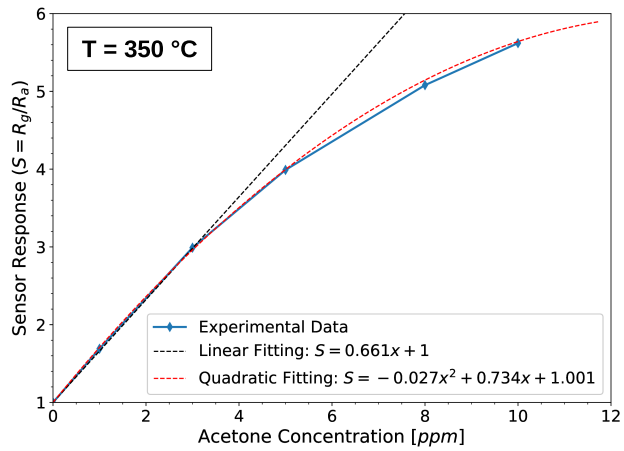

Fig. 5. Calibration curve for the proposed sensor obtained at a working temperature of 350 °C. The linear and quadratic fittings are shown as well with dashed lines.

B. Sensitivity and selectivity characterization

In order to assess how the sensitivity changes with the acetone concentration, a new measurement run was carried out maintaining the working temperature constant at 350 °C and changing the acetone concentration in the range from 1 ppm to 10 ppm. The sensor response was evaluated for each acetone concentration and a calibration curve was obtained, as shown in Fig. 5. In particular, the sensor response seems follow a quadratic law in the analyzed range, even though it can be approximated as linear at concentrations lower than about 3 ppm.

Therefore, a linear and quadratic fittings were carried out from the experimental data in order to achieve a mathematical relation which can be used to obtain the acetone concentration from the direct measurement of the sensor response. The linear fitting, which can be used for concentrations up to 3 ppm, shows a sensitivity of about 0.661 ppm^{-1}:

$$x = 1.513S - 1.513 \tag{2}$$

where S is the sensor response and x is the acetone concentration.

Instead, for acetone concentrations higher than 3 ppm the following quadratic relation can be used:

$$x = 13.593 - \sqrt{221.833 - 37.037S} \tag{3}$$

A further characterization was carried out in order to assess the selectivity of the sensor. With this aim the sensitivity toward the sensor to different gases, such carbon oxide and dioxide, hydrogen, oxygen, methane and ammonia, was assessed and compared to the sensitivity toward acetone. Table I shows the achieved results. The responses of all the tested gases are negligible with the exception of ethanol which results to be the only interferent gas detected in the test. Anyway, the

TABLE I
RESULTS OF THE SELECTIVITY TEST. THE SENSITIVITIES OF THE SENSOR TOWARDS THE TESTED GASES ARE NORMALIZED TO THE GAS CONCENTRATION.

Gas	Concentration (ppm)	Norm. sensitivity (ppm^{-1})
ACETONE	**5**	**0.8**
CO	50	0.027
CO_2	500	< 0.01
H_2	100	0.014
CH_4	1000	< 0.01
NH_3	100	0.019
O_2	50000	< 0.01
NO_2	5	< 0.01
ETHANOL	**5**	**0.225**

response to acetone is still about four times greater than the one of ethanol.

Stability of sensor sensitivity was assessed as well by measuring several times the sensor response towards acetone. A maximum variation of the response lower than 1% was recorded over ten repeated measurements. Moreover, a bunch of 3 equal sensors was tested and their sensitivity was compared to the calibrated sensor. The test revealed a maximum error of 2% between the uncalibrated sensors and the calibrated one.

IV. CONCLUSIONS

A metal oxide gas sensor for acetone was developed by depositing a Nb_2O_5 thin-layer over an alumina substrate by employing reactive plasma sputtering. The sensor was characterized and it revealed very interesting sensing performance. In particular, the best sensitivity towards acetone is reached at a working temperature of $350\,°\mathrm{C}$. The baseline resistance of the sensor at this temperature is about $1\ \mathrm{G\Omega}$, a value which can be easily measured with low-cost electronics. The high sensitivity reached by the sensor allows one to measure acetone concentrations lower than $1\ \mathrm{ppm}$. The response of the sensor is well fitted by a quadratic law, but it can considered linear for acetone concentrations up to $3\ \mathrm{ppm}$. Also the dynamic performance of the sensor are very interesting with a response time of only $5\ \mathrm{s}$ and a recovery time around $45\ \mathrm{s}$. The selectivity is very good and the only significant interferent gas found in the characterization is ethanol.

The characterization highlighted also how the sensor stability is very good being the maximum variation of the response lower than 1%. The manufacturing process is quite repeatable, as well. The tests carried out over 3 different uncalibrated sensors revealed a maximum sensitivity error of about 2% in respect to the calibrated sensor.

The performance achieved by the proposed sensor, together with the small dimensions and the low power-consumption, make such a sensor a very promising solution for acetone monitoring in several fields, including portable applications. In particular, the proposed sensor can find application in the field of breath analysis for the non-invasive monitoring of the acetone in the exhaled breath of diabetes patients.

REFERENCES

[1] Z. Yunusa, Mohd. N. Hamidon, A. Kaiser, Z. Awang, "Gas sensors: a review", *Sensors & Transducers*, vol. 168, issue 4, April 2014, pp. 61-75.

[2] A. Dey, "Semiconductor metal oxide gas sensors: a review", *Materials Science and Engineering: B*, vol. 229, 2018, pp. 206-217, doi: 10.1016/j.mseb.2017.12.036.

[3] E. Angelini, C.E.A. Posada, E. Di Francia, S. Grassini, L. Iannucci, L. Lombardo, M. Parvis, "Indoor and outdoor atmospheric corrosion monitoring of cultural heritage assets", *Metallurgia Italiana*, 2018 (4), pp. 34-41.

[4] C. Wang, A. Mbi, M. Shepherd, "A study on breath acetone in diabetic patients using a cavity ringdown breath analyzer: exploring correlations of breath acetone with blood glucoseand glycohemoglobin A1C", *IEEE Sensors Journal*, vol. 10, n. 1, January 2010.

[5] Z. Wang and C. Wang, "Is breath acetone a bio-marker of diabetes? A historical review on breath acetone measurements", *Journal of Breath Research*, vol. 7, n. 3, 2013.

[6] K. Muthukrishnan, M. Vanaraja, S. Boomadevi, R.K. Karn, V. Singh, P.K. Singh, K. Pandiyan, "Studies on acetone sensing characteristics of ZnO thin film prepared by sol-gel dip coating", *Journal of Alloys and Compounds*, n. 673, pp. 138–143, 2016.

[7] L. Lombardo, N. Donato, S. Grassini, A. Gullino, K. Moulaee, G. Neri, M. Parvis, "High sensitive and selective minisensor for acetone monitoring", *IEEE Transactions on Instrumentation and Measurement*, vol. 69, no. 6, pp. 3308-3316, June 2020, doi: 10.1109/TIM.2020.2967161.

[8] P.T. Moseley, "Solid state gas sensors", *Measurement Science and Technology*, vol. 8, n. 3.

[9] Z. Wang, Y. Hu, W. Wang, X. Zhang, B. Wang, H. Tian, Y. Wang, J. Guan, H. Gu, "Fast and highly-sensitive hydrogen sensing of Nb_2O_5 nanowires at room temperature", *International Journal of Hydrogen Energy*, n. 37, pp. 4526–4532, 2012.

[10] J. Zhang, X. Liu, G. Neri, N. Pinna, "Nanostructured material for room-temperature gas sensors", *Advanced Materials*, n. 28, pp. 795–831, 2016.

[11] Y. Li, X. Yu, Q. Yang, "Fabrication of TiO_2 nanotube thin films and their gas sensing properties", *Journal of Sensors*, pp. 1–19, 2009.

[12] K.J. Choi, H.W. Jang, "One-dimensional oxide structures as gas-sensing materials: review and issues", *Sensors*, n. 10, pp. 4083–4099, 2010.

[13] T. Hemalatha, S. Akilandeswari, T. Krishnakumar, S. G. Leonardi, G. Neri and N. Donato, "Comparison of electrical and sensing properties of pure, Sn- and Zn-doped CuO gas sensors", *IEEE Transactions on Instrumentation and Measurement*, vol. 68, no. 3, pp. 903-912, March 2019, doi: 10.1109/TIM.2018.2852538.

[14] L. Chambon, A. Pauly, J.P. Germain, C. Maleysson, V. Demarne, A. Grisel, "A model for the responses of Nb_2O_5 sensors to CO and NH_3 gases", *Sensors and Actuators B*, vol. 43, pp. 60–64, 1997.

[15] C. Wang, L. Yin, L. Zhang, D. Xiang, R. Gao, "Metal oxide gas sensors: sensitivity and influencing factors", *Sensors*, pp. 2088–2016, 2010.

[16] N. Barsan, C. Simion, T. Heine, S. Pokhrel, U. Weimar, "Modelling of sensing and transduction for P-type semiconducting metal oxide based gas sensors", *Journal of Electroceramics*, vol. 25, issue 1, pp 11–19, August 2010.

[17] L. Lombardo, S. Grassini, M. Parvis, N. Donato and A. Gullino, "Ethanol breath measuring system", *2020 IEEE International Symposium on Medical Measurements and Applications (MeMeA)*, 2020, pp. 1-6, doi: 10.1109/MeMeA49120.2020.9137215.

[18] A. Gullino, M. Parvis, L. Lombardo, S. Grassini, N. Donato, K. Moulaee, G. Neri, "Employment of Nb_2O_5 thin-films for ethanol sensing", *2020 IEEE International Instrumentation and Measurement Technology Conference (I2MTC)*, 2020, pp. 1-6, doi: 10.1109/I2MTC43012.2020.9128457.