POLITECNICO DI TORINO
Repository ISTITUZIONALE

Monitoring a DC train supplied by a reversible substation

Original
Monitoring a DC train supplied by a reversible substation / Cipolletta, G.; Femine, A. D.; Gallo, D.; Landi, C.; Luiso, M.; Gallo, A.; Pastena, L.; Balic, F.; Fernandez, J. Q.; Giordano, D.; Signorino, D.. - ELETTRONICO. - (2020), pp. 1-6. (Intervento presentato al convegno 2020 IEEE International Instrumentation and Measurement Technology Conference, I2MTC 2020 tenutosi a Dubrovnik, Croatia nel 25-28 May 2020) [10.1109/I2MTC43012.2020.9128644].

Availability:
This version is available at: 11583/2850472 since: 2022-07-08T10:50:17Z

Publisher:
Institute of Electrical and Electronics Engineers Inc.

Published
DOI:10.1109/I2MTC43012.2020.9128644

Terms of use:

This article is made available under terms and conditions as specified in the corresponding bibliographic description in the repository

Publisher copyright
IEEE postprint/Author's Accepted Manuscript

©2020 IEEE. Personal use of this material is permitted. Permission from IEEE must be obtained for all other uses, in any current or future media, including reprinting/republishing this material for advertising or promotional purposes, creating new collecting works, for resale or lists, or reuse of any copyrighted component of this work in other works.

(Article begins on next page)

12 October 2024

Monitoring a DC Train Supplied by a Reversible Substation

G.Cipolletta, A.Delle Femine,
D.Gallo, C.Landi, M.Luiso
Department of Engineering
University of Campania "Luigi Vanvitelli" Aversa (CE), Italy
giuliano.cipolletta@ unicampania.it

A.Gallo[1], L.Pastena[2]
[1]*HitachiRail – Electrical System Engineering*
[2]*HitachiRail – R&D and Components Development*
Via Argine, 425 – 80147 Napoli Italy
luigi.pastena@hitachirail.com

F.Balic, J.Quintana Fernández
Metro de Madrid
C/ Néctar, 44 – 28022 (Madrid)
fabio.balic@metromadrid.es

D.Giordano, D.Signorino
Italian National Institute of
*Metrological Research (INRIM)*Torino, Italy
d.signorino@inrim.it

***Abstract* — European energy policy has been supporting a gradual shift towards an efficient energy management in order to reduce the railway transport emissions by 50 % within 2030. One of the most promising solutions to reduce emissions is the recovery of braking energy: it is possible to convert kinetic energy back to the electrical form and reinject it back to the grid. Currently, because of the unidirectional nature of the substation, the receptivity of the supply network is limited and only a small part of the traction energy is sent back to the catenary. The remaining part is usually wasted on the train braking rheostats. In this scenario, new installations of reversible substations in DC railway systems, can improve energy savings. In this paper, in order to evaluate the impact of this innovative technology, a preliminary analysis of the data acquired during a measurement campaign conducted jointly with Metro de Madrid (train and substation owner) and HitachiRail (train manufacturer) is presented. Energy exchanged between train and supply line and real-time power quality events survey can be valuable tools to make an estimation of the impact of the reversible substation.**

Keywords—Railway system, DC Reversible Substations, Inverting Substations, DC Power Quality, Energy measurement, Energy Savings, Power System Measurement.

I. Introduction

The development of an efficient and environment-friendly electric railway system plays a key role in the evolution of transport worldwide. Reliability and absence of local emissions but also the high energy efficiency, compared with other means of transportation, are some of the most important advantages of the railway system. Nevertheless, further fostering the energy efficiency of railway system is an important issue, considering that the total amount of energy required for the European railway system is a huge number (36.5 TW) and that the growing need of vehicles with a higher on-board comfort and, in turn, higher transport capacity entails a growing demand for traction energy. Furthermore, given the highly competitive context of the other modes of urban transportation, reduction in energy consumption is crucial for the rail to keep its competitiveness as the most sustainable and economic means of transport [1].

Four are the main aspects that can influence the energy efficiency of electric railway systems. The weight of the vehicle, the efficiency of the electric energy conversions (both in substations and in traction systems), the driving profile and the recovering of kinetic energy during the braking, [2]. Several methods could be implemented to intervene on these aspects, but in this paper, we are focused on the last one.

The recovery of braking energy is one of the most promising solutions of energy savings in the field of the railway systems. In general, when an electric vehicle brakes, in principle, it could invert its electric motor control, so its motors work as generators converting the kinetic energy back in the electric form. This is called electrodynamic braking (alternative to the traditional mechanic braking that instead wastes the kinetic energy),[3].

In particular, on electric train, this recovered energy can be consumed (by auxiliary systems for example) or stored on board train by battery system or reinjected on the over-head line. This is addressed to as regenerative braking. The regenerated energy injected on the catenary can be used by other rolling stocks on the same line. Nevertheless, this method can be employed only if that energy is simultaneously required by other trains on the same section of track (see Fig. 1). If there is not an adjacent train that needs that energy, it is not possible to injected energy on the line and it have to be dissipated on-board usually into braking resistors. As mentioned before, alternatively this energy could be stored on-board. Nevertheless, storing this surplus of energy would require high maintenance costs and increase the weight of the rolling stocks (with obvious negative consequence on the efficiency), [4].

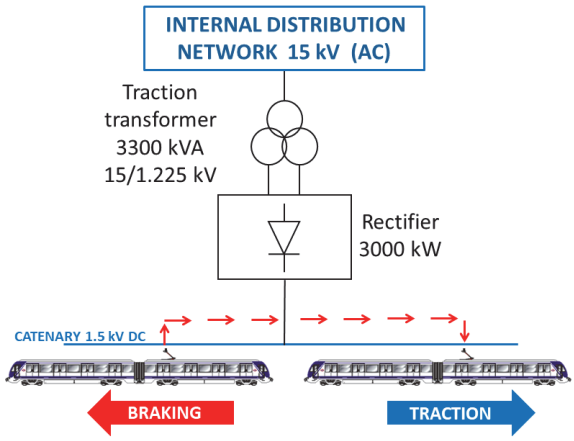

Fig. 1 Princile of regenerative braking

XXX-X-XXXX-XXXX-X/XX/$XX.00 ©20XX IEEE

As possible solution to maximize the recovery of energy, train timetable optimization has been proposed [3], taking advantage of concurrent braking and acceleration, thus using less net power. Obviously, it is not always possible to adopt such a strategy.

The regenerated energy could be instead returned to the power distribution network, making it available for other loads and potentially purchasable by the energy provider. This is possible by means of reversible substations, that is a more flexible solution to improve the line receptivity. This option requires significant investments by the railway stakeholders. Currently, most of the working substations only allows a unidirectional energy flow from the electrical grid [4]-[7]; consequently, it should be necessary to substitute all the energy converters with modern bidirectional ones. Obviously, it is of great interest to correctly quantify the amount of energy that can be saved adopting this technique.

As on-board monitoring of energy consumption is not a common feature in train control system, to have a complete and accurate knowledge of energy flux during normal working conditions, and so quantifying the impact of the installation of new reversible substations from both points of view environmental and economic, a specific measurement systems was developed. This activity is part of the metrology research project 16ENG04 MyRailS [8] with funding from the EMPIR program (European Metrology Program for Innovation and Research) co-financed by the participating states and from the European Union. The stakeholder partner of this project (Metro de Madrid) has shown great interest in the adopting reversible substations as a response to environmental concerns and to reduce the infrastructure costs for urban and suburban rail transport network. In order to minimize experimentation costs, a traditional substation of one underground line has been transformed in reversible adding a DC/AC converter of 2 MW in anti-parallel with the already present rectifier, minimizing modification of the existing electric system. At the best author knowledge at the moment of writing this is the first time that a traceable measurement instrumentation has been installed on-board train and adopted on a line with bidirectional supply system.

In the following, Section II describes the train on which the measurement campaign has been conducted and the selected monitored quantities, whereas Section III is focused on the measurement setup installed on-board train. In Section IV the results of the energy analysis and the detection of power quality events are described. Section V draws the conclusions.

II. Train under analysis

The train chosen as object of study is the "S9000 3 CARS SS3", that is a subway train with three cars, provided by Metro de Madrid (Fig. 2), whose features are shown in Table I. It is a common train in normal operation on the line 10B of Madrid subway. From the electrical point of view, the nominal line voltage is 1500 V DC and the maximum current absorption for the train is of 1650 A. In the S9000 train, there are two traction cars, with two independent pantographs. The two traction units are controlled with identical commands and work in nearly the same conditions, so it is possible to assume that energy flows are nearly identical. This allows to simplify the measurement system that, therefore, could be installed for measuring power and energy absorbed by a single locomotive. To obtain an evaluation of whole train it is possible to multiply the values obtained by the single traction carriage by two. So, in the following, all the discussion and results will be referred to a single traction unit.

Fig. 2 S9000 3 CARS SS3

TABLE I. General Characteristics Of Trains 9000 3 Cars

Parameter	Value
Total length	54 m
CarM length	18.550 m
CarR length	17.800 m
Axle	12
Rated supply voltage	1500 V
Total power	8 x 187 kW
Maximum car height	3.878 m
Car width	2.808 m
Total weight	95000 kg
Maximum speed	110 km/h

The traction unit input current, I_p, is split in two components: one to the auxiliary systems (lighting, conditioning, etc.), I_a, and one to the traction system, I_t, (see Fig. 3). The traction system is equipped with a second order filter composed by the inductance L_f and the capacitor bank C_f, in order to limit the voltage distortion coming from the line (V_p) to the inverter (V_t), during the traction phase, and from the inverter to the line, during the braking phase. The capability of the grid to absorb the power generated by a train, during the braking phase, depends on the presence of a contemporary absorption (traction) of some other train on the same line. Injecting current into supply network in absence of absorption of power from other trains would lead to an increase in the line voltage which could compromise the state of the whole supply system. A chopper and a two-element resistor bank are adopted to manage the electrical energy generated during a braking stage; when needed, the chopper limits the injection of current back to the catenary wasting the energy on the braking rheostats locally. By regulating the chopper duty-cycle, it is possible to regulate the amount of current, I_{RA} and I_{RB}, and so the energy dissipated by rheostats, and, as a consequence, the amount energy injected in the overhead contact line. The parameter

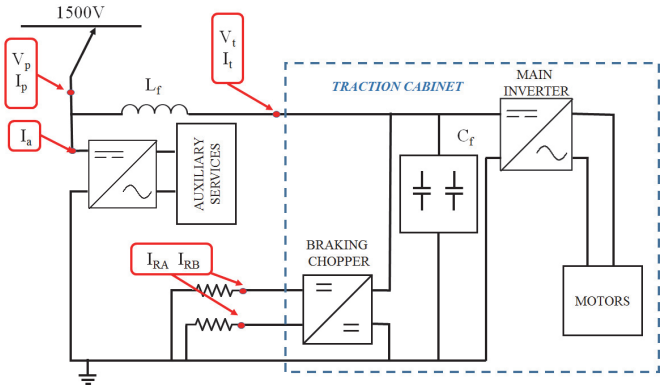

Fig. 3 Input stage of S9000 train

that controls the duty-cycle is the traction voltage, V_t: the chopper starts working when V_t is greater than 1700 V and increases the duty cycle to limit voltage.

III. Measurement System

To have a complete knowledge of energy fluxes of the train during all operation, it is necessary to monitor (see Fig. 3): V_p, that is the common voltage for traction and auxiliary systems, and V_t , that is the voltage applied on the two braking rheostats I_p, that is the total current, and I_t, that is the traction current, I_a, that is the auxiliary systems absorbed current and I_{Ra} and I_{Rb}, that are the currents of the braking rheostats. To this aim, a proper measurement system able to acquire and to store two voltages and five currents, was developed (see Fig. 4). It is based on a National Instruments Compact Rio 9034 that is a stand-alone reconfigurable embedded chassis that features an embedded controller with a 1.91 GHz Real-Time processor, a reconfigurable (Field Programmable Gate Array) FPGA, 2 GB RAM DDR3 and a SD port for data storage. As regards the acquisition modules, the Compact Rio 9034 houses two NI 9223 that are 4-channel voltage modules, with differential inputs and simultaneous sampling with a maximum range of $\pm$ 10 V, 1 MHz as maximum sampling rate and a resolution of 16 bit. The sample clock of the first NI 9223 is exported to the second one, in order to obtain simultaneous sampling on all 8 channels. The data acquisition is performed at a sample rate of 50 kHz. The acquisition system is referenced to absolute time via the GPS module NI 9467, that provides a Pulse Per Second (PPS) signal with an accuracy of 100 ns. Obviously, the GPS receiver cannot work well underground, but the train passes in an open sky track once a day, the system can synchronize with UTC in that moment and keep time using internal real time clock. Furthermore, the NI 9211 thermocouple input module has been employed to monitor the temperature inside the rheostats room with 14 Samples/s Aggregate, $\pm$ 80 mV of input range, 24-bit delta-sigma analog-to-digital converter, anti-aliasing filters, open-thermocouple detection and cold-junction compensation for high-accuracy thermocouple measurements.

The nominal amplitude of the two voltages V_p, and V_t is 1500 V. In order to scale down the voltages in a range suitable for the acquisition system, opportune voltage divider has been selected.

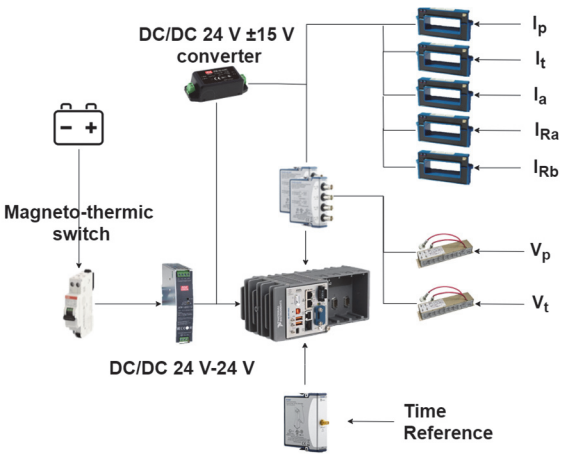

Fig. 4 Measurement setup

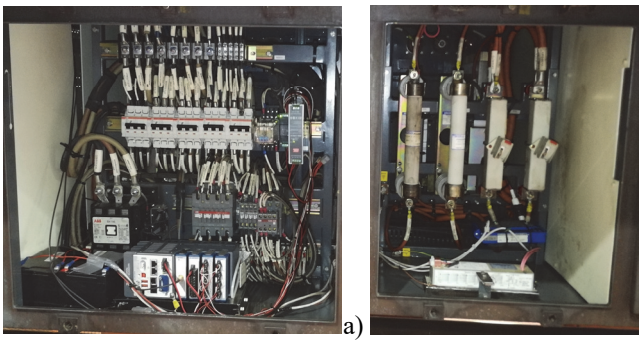

Fig. 5 a) Low voltage cabinet b) High voltage cabinet

In particular, two Ultravolt 40TF-CDCD (40 kV/40 V 0 Hz ÷ 1 MHz, 0.25 %) resistive-capacitive dividers have been used. For the currents, zero flux compensated Hall effect current transformers has been adopted. They have openable magnetic core, that facilitate the installation on-board train. More in details I_p and I_t have been measured via two LEM HOP 2000 that features a primary nominal rms current of 2000 A as their amplitude can reach 1000 A, meanwhile I_a, I_{Ra} and I_{Rb} have been measured by means of three LEM HOP 800 that features a primary nominal current of 800 A as they reach a significantly lower amplitude (few hundreds Ampère). Both models feature an output voltage of 4 V with an accuracy lower than 2 %, a flat frequency response from DC to 10 kHz and a supply voltage of +/- 15 V.

To allow a continuous monitoring of the train signals, even when the pantograph is not in contact with the catenary, the whole measurement system has been connected to a battery recharged by 24V DC supplied by the train. As it can be seen from Fig. 4, the battery supply voltage is provided to the measurement system via a magneto-thermic switch and a isolated DC/DC 24V/24V that guarantee isolation and safety. After this main converter, a second DC/DC 24 V/±15 V converter is used to supply the current transducers. Fig. 5 shows the low voltage cabinet where the data acquisition system is located. In Fig. 5b the high voltage cabinet is shown, in which one voltage divider, related to the pantograph voltage measurement, and one current transducer, related to the auxiliary service current have been installed. The other transducers are located under the train in proximity of the traction cabinet. All the transducers have been metrologically characterized at INRIM laboratories.

To evaluate the energy flows of the train in different working conditions, a preliminary energy analysis has been conducted. From the balance of energy, it results

$$E_p = E_a + E_t \tag{1}$$

where E_p is the total energy at pantograph, E_a is the energy absorbed by auxiliary systems and E_t is the traction energy. From the monitored quantities these energies can be calculated as

$$E_p = V_p I_p,\ E_t = V_t I_t,\ E_a = V_p I_a \tag{2}$$

In (1), all the quantities are positive. During the braking, the traction energy E_t is composed by two parts: E_m, the energy generated by motor and E_r energy wasted on the rheostats, thus (1) results

$$E_p = E_a + E_m - E_r \tag{3}$$

where

$$E_r = V_p(I_{RA} + I_{RB}) \quad (4)$$

In (3), E_m is always negative, E_a and E_r are always positive. E_p is negative or zero as a consequence of the value of E_r..

IV. Experimental Results

A measurement campaign on board the trains of metro de Madrid is still in progress at time of writing. The experimentation has been conducted on line 10B, that goes from Hospital Infanta Sofia to Tres Olivos and on which a reversible substation has been installed. Preliminary results obtained from first days of acquisitions are already available. This first analysis has been conducted on two weeks of data with around 2 TByte of measurements recorded. In the following, some example of data analysis and the obtained results on the energy exchange between vehicle and grid in different working conditions of the train are presented and discussed. In addition, some power quality [9] events detected during the measurement campaign are reported too. Note that all the data reported, including energy balances, regards half train, because of the measurement are conducted on single traction unit.

A. Preliminary signal analysis

Fig. 6 and Fig. 7 report, respectively, the voltage and the current recorded during three minutes of the initial trip on 14/10/2019 as example of typical acquired signals. The depicted values have been averaged over 0.1 s that is a good trade-off to reduce the amount of reported data and, at the same time, to present the recorded signals in a sufficiently detailed way. Observing the current (Fig. 7), it is possible to easily distinguish the moments in which the train was accelerating, therefore absorbing a positive current remarkably high (05:30:15 and 05:32:00). In correspondence of these high current absorption, the level of voltage remarkably decreases due to the voltage drop along the supply line (Fig. 6). In addition, also at different time (05:31:10) a voltage reduction of the same amount can be noticed. This is probably due to the acceleration of a different train supplied by the same power line. Still, observing the current, it is also possible to distinguish easily the moments in which the train was baking, in fact a negative current was measured (05:30:30, 05:31:00, 05:31:30 and 05:32:20). A negative value for the current, as stated before, means that the train was regenerating and injecting energy in the supply system.

It is interesting to observe also the current flowing into the braking rheostats during the same time periods. Fig. 8. reports $I_{Ra,}$ the current in the first rheostat. The current flowing into the other rheostat has a very similar behaviour and so it is not here reported for sake of brevity. The Fig. 8 reports values sampled at 50 kHz as this is a high frequency signal. Note that in correspondence of every braking (every time the current on Fig. 7 becomes negative) the rheostatic braking starts, therefore a certain amount of energy is always dissipated as the level of voltage exceeds the 1700 V. This means that not all possible energy has been regenerated and a certain amount of it is wasted each braking. This occurs as the line is not able to accept all the regenerated energy. The amount of recoverable energy can change remarkably during the time and it depends from the working conditions of the other trains that are supplied by the same line and from the main power supply network condition. A way to evaluate the line capability to receive energy regenerated is the comparison between the amplitude of current at pantograph with the amplitude of current in the rheostats. Assuming that the

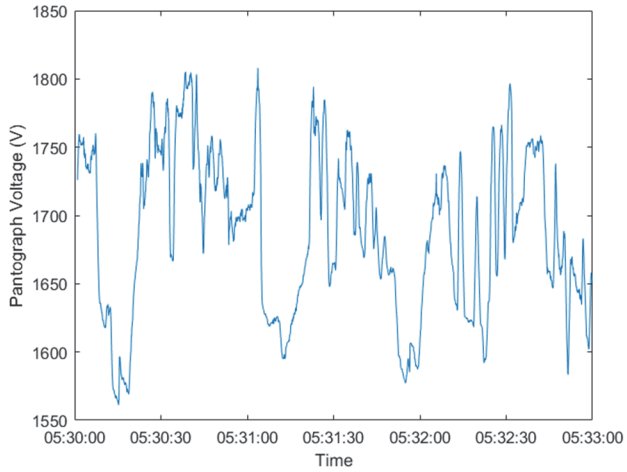

Fig. 6 Pantograph voltage recorded on 14/10/2019

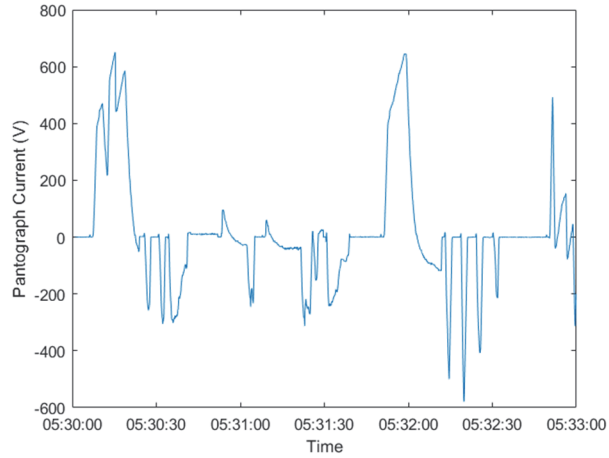

Fig. 7 Pantograph current recorded on 14/10/2019

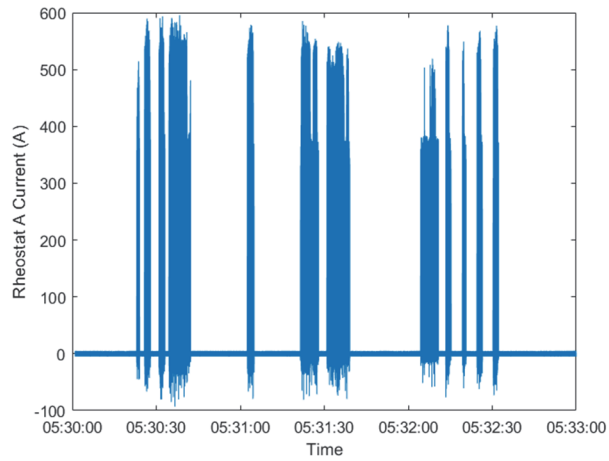

Fig. 8 Braking rheostat current recorded on 14/10/19

braking effort changes slightly during the considered braking time interval, the difference between regenerated energy and regenerable energy can be argued comparing the level of negative current at pantograph and the level of current in the rheostats: high receptivity of the power line would allow higher level of the injected current and a lower dissipated power. This conclusion is also confirmed analysing power dissipated in the rheostats, see Fig. 9.

Looking Fig. 8, at a first glance, it can seem that the amount of power dissipated is always the same in the various

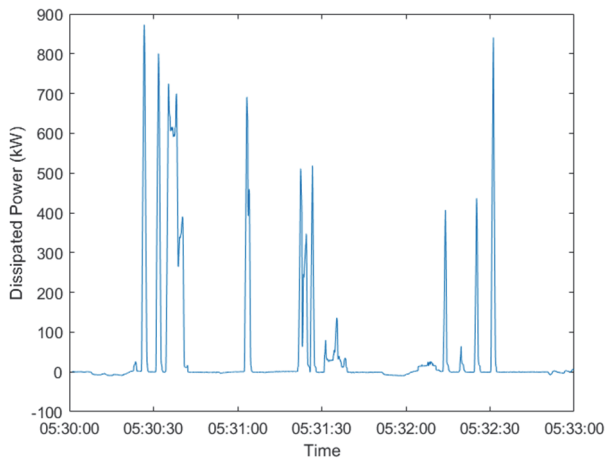

Fig. 9 Dissipated power recorded on 14/10/2019

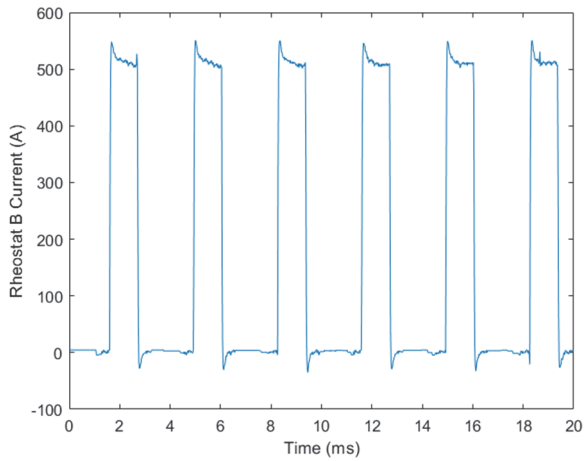

Fig. 10 Zoom of Fig. 8 around 5:30:40

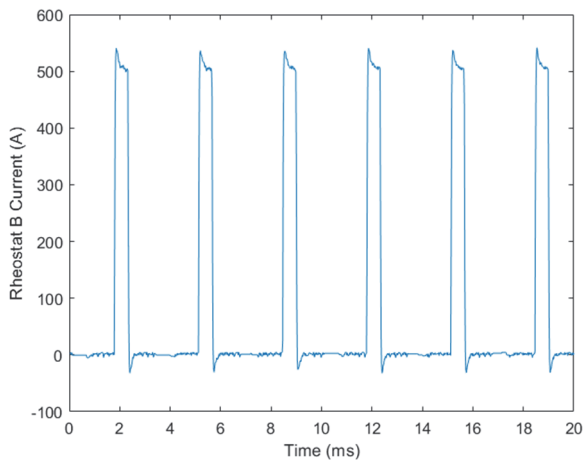

Fig. 11 Zoom of Fig. 8 around 5:32:25

braking time intervals, as in all situations the peak level are nearly the same. Nevertheless, this is not correct since the dissipated power is controlled with a pulse waveform modulation (PWM) technique. In fact, as it can be seen from Fig. 10 and Fig. 11, the duty cycle change, consequently, despite having the same peak power, the energy changes. Fig. 10 and 11 report two zooms of Fig. 8 during the two different braking times: the duty cycles are substantially different, almost halved. This leads to the different amount of average dissipated power found in Fig. 9.

B. *Energy analysis*

In the following, it is described a preliminary energy analysis performed on acquired data in an entire day. In particular, the data recorded during all the service time of the days reported in Table II have been analysed, with a time analysis respectively of 20 and 15 hours.

In TABLE III. the values of the total absorbed energy compared with the actual energy re-injected during the braking stage are reported. It is evident that a considerable amount of the total absorbed, is reinjected in the over-head line, about 41 % with a remarkable energy saving. In TABLE IV. a comparison between the recovered and dissipated part of the total braking energy is shown. Note that almost the 88 % of the braking energy has been recovered. Please pay attention to the absolute numbers, considering that the value reported in the tables regard a half train, a single metro train in Madrid can recover more than 1.6 MWh a day, thanks to the reversible substation.

TABLE II. DATA INFO

Date	Service start	Service end	Working hours	Number of routes
14-ott	05:30	01:30	20	29
15-ott	05:30	20:24	15	21

TABLE III. ABSORBED ENERGY ANALYSIS

Date	*Energy*					
	Absorbed	*Recovered in Power System*		*Net Absorbed*		*Average Absorbed*
		kWh	*%*	*kWh*	*%*	*kWh/route*
14-ott	2.287	970	42%	1.317	58%	79
15-ott	1.870	750	40%	1.120	60%	89

TABLE IV. GENERATED ENERGY ANALYSIS

Date	Energy					
	Generated	*Recovered in Power System*		*Dissipated in Rheostats*		*Average Generated*
		kWh	*%*	*kWh*	*%*	*kWh/route*
14-ott	1092	970	89%	103	9%	37
15-ott	865	750	87%	77	9%	39

C. *Voltage analysis and overvoltage events*

As it has been widely discussed and shown before in section IV.A, the line does not always receive all the regenerated energy. In fact, the train measures the voltage amplitude and, over a certain level (1700 V), establishes that it is not possible to inject all the energy on the line, so it starts dissipating. For these reasons analysing the voltage level is particularly interesting. The voltage level assumes the role of limiting the recoverable energy. To this aim, it is interesting to observe the statistical analysis of the supply voltage magnitude along all the routes of the line 10 during different times of the two days, reported in fig 13 (average values over one second). It provides an estimate of the levels of energy receptivity of the line. In details, it can be seen that the average value and all the most recurring values are higher than the nominal voltage (1500 V). As it can be seen from the pdf, the probability of finding voltage higher than 1550 V is greater than 95%. Of course, this limits considerably the possibility to recover the braking energy, despite the presence of a reversible substation.

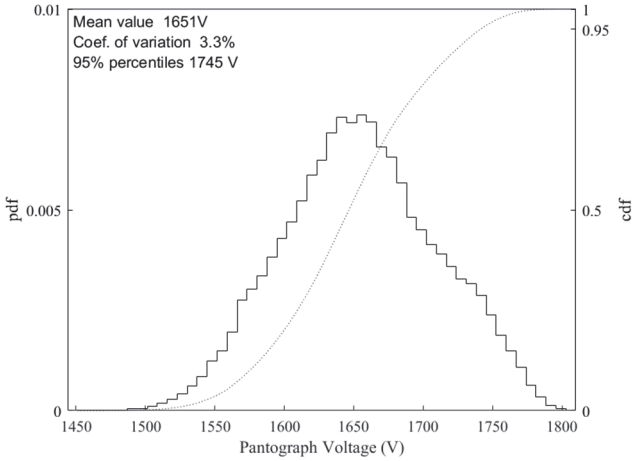

Fig. 12 Statistical analysis of 1 s average value of Pantograph voltage

From Fig. 12 the level of voltage appears to never exceeds 1800 V this is true for average values but not for instantaneous values. As an example, let's analyse the overvoltage shown in Fig. 13. The train was electrically braking, consequently its pantograph current is negative (see Fig. 14). When the overvoltage event occurs the current suddenly decreases. The train assumes that it is not possible to regenerate the energy, so it starts chopping it, wasting energy on the on-board rheostats. In Fig. 15 it can be seen that the rheostat current increases slightly after the decrease of the pantograph current.

V. Conclusions

A measurement campaign is still in progress on board the trains of metro de Madrid. The scope of this experimentation is to establish in a traceable way the amount of energy that has been saved installing inverting substation converters. Great interest has been shown about this topic in scientific literature and from railway stakeholders because of the high economic and environmental impact. Preliminary results from this campaign have been presented, with a discussion of interesting energy balances. Other measurement results are being recorded at the time of writing. Further investigations are needed to evaluate particular working situations or source of Power Quality phenomena.

Acknowledgment

The results here presented are developed in the framework of the 16ENG04 MyRailS Project [8] with funding from the EMPIR program co-financed by the Participating States and from the European Union's Horizon 2020 research program.

References

[1] COM (2011) 144 Wight Paper: Roadmap to a Single European Transport Area – Towards a competitive and resource efficient transport system.

[2] Z. Tian et alii "Energy Evaluation for DC Railway Systems with Inverting Substations," *2018 IEEE International ESARS-ITEC Conference*, Nottingham, 2018, pp. 1-6.

[3] M. Dominguez et alii, "Energy Savings in Metropolitan Railway Substations Through Regenerative Energy Recovery and Optimal Design of ATO Speed Profiles," in *IEEE Transactions on Automation Science and Engineering*, vol. 9, no. 3, pp. 496-504, July 2012.

[4] M.Brenna, FFoiadelli, D. Zaninelli, "Electrical Railway Transportation Systems", Mar 2018, Wiley-IEEE Press, ISBN: 978-1-119-38680-3.

[5] Y.Oura, Y.Mochinaga, H.Nagasawa, "Railway Electric Power Feeding Systems", Japan Railway & Transport Review 16, June 1998.

[6] CEI EN 50163:2004+A1:2007, Railway applications — Supply voltages of traction systems.

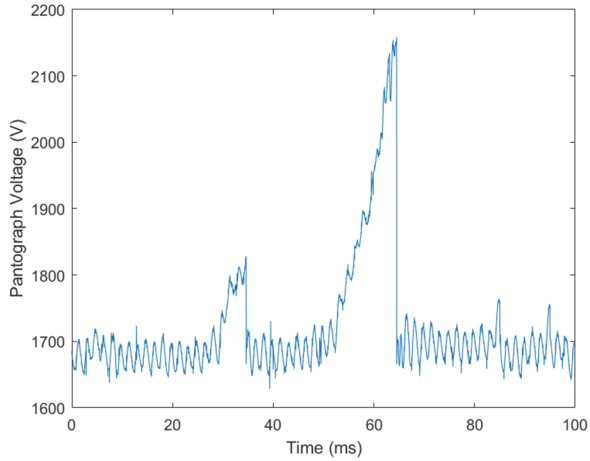

Fig. 13 Pantograph voltage

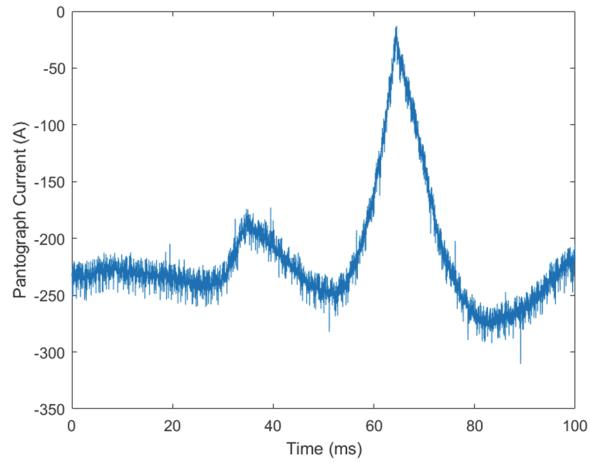

Fig. 14 Pantograph current

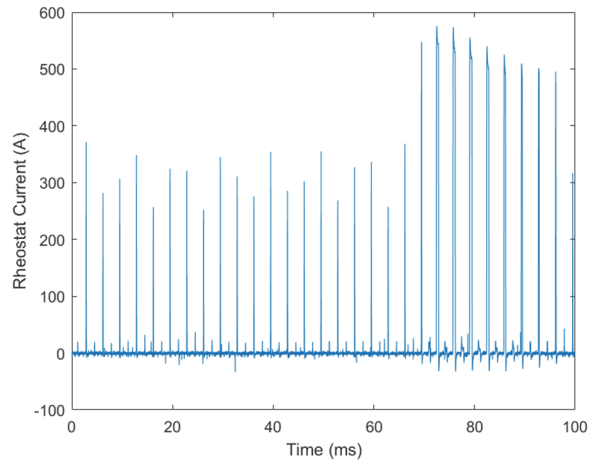

Fig. 15 Rheostat current

[7] IEC 62313:2009 Railway applications - Power supply and rolling stock - Technical criteria for the coordination between power supply (substation) and rolling stock.

[8] D. Giordano et alii "Accurate Measurements of Energy, Efficiency and Power Quality in the Electric Railway System", CPEM 2018.

[9] G. Crotti, A. Delle Femine, D. Gallo, D. Giordano, C. Landi, M.Luiso, A. Mariscotti, P. E. Roccato, "Pantograph-to-OHL Arc: Conducted Effects in DC Railway Supply System", IEEE Transactions on Instrumentation and Measurement, 2019.