POLITECNICO DI TORINO
Repository ISTITUZIONALE

Screen-Printed Flexible Circular and Rectangular Silver Spirals for Planar Electrodynamic Loudspeakers: A Comparative Study of Pressure Frequency Response

Original
Screen-Printed Flexible Circular and Rectangular Silver Spirals for Planar Electrodynamic Loudspeakers: A Comparative Study of Pressure Frequency Response / Madagalam, Mallikarjun; Torraca, Paolo La; Ahmed, Mukhtar; Douaki, Ali; Sanchezfayos, Ignacio Merino; Cohen, Nitzan; Petti, Luisa; Lugli, Paolo. - STAMPA. - (2022), pp. 104-106. (Intervento presentato al convegno 2022 IEEE Electron Devices Technology & Manufacturing Conference (EDTM) tenutosi a Japan (Tokyo) nel March 2022) [10.1109/EDTM53872.2022.9798156].

Availability:
This version is available at: 11583/2968641 since: 2022-06-24T10:49:01Z

Publisher:
IEEE

Published
DOI:10.1109/EDTM53872.2022.9798156

Terms of use:

This article is made available under terms and conditions as specified in the corresponding bibliographic description in the repository

Publisher copyright
IEEE postprint/Author's Accepted Manuscript

©2022 IEEE. Personal use of this material is permitted. Permission from IEEE must be obtained for all other uses, in any current or future media, including reprinting/republishing this material for advertising or promotional purposes, creating new collecting works, for resale or lists, or reuse of any copyrighted component of this work in other works.

(Article begins on next page)

12 October 2024

Screen-Printed Flexible Circular and Rectangular Silver Spirals for Planar Electrodynamic Loudspeakers: A Comparative Study of Pressure Frequency Response

Mallikarjun Madagalam[1,4], Paolo La Torraca[2], Mukhtar Ahmed[1], Ali Douaki[1], Ignacio Merino SanchezFayos[3], Nitzan Cohen[3], Luisa Petti[1], Paolo Lugli[1]

[1]Faculty of Science and Technology, Free University of Bolzano-Bozen, 39100, Italy.

[2]Department of Science and Methods for Engineering, University of Reggio Emilia, Reggio Emilia, 42122, Italy.

[3]Faculty of Art and Design, Free University of Bolzano-Bozen, 39100, Italy.

[4]Department of Applied Science and Technology, Politecnico di Torino, Torino, 10129, Italy.

Abstract

We present the fabrication and characterization of flexible planar electrodynamic loudspeakers. Conductive spirals are fabricated on a flexible and transparent polyethylene terephthalate substrate via screen printing. Different geometries (circular and rectangular) and sizes of the conductive spirals are investigated to understand their impact on the performance. The optimized circular spiral allows achieving an average sound pressure level of 63 dB at 1m distance in 2kHz-20kHz band, proving the suitability of these devices as high-frequency loudspeaker drivers.

(Keywords: Screen printing, Silver, Speaker)

Introduction

Loudspeakers (LS) are electroacoustic transducers able to convert an electrical signal (i.e., an audio signal) into an acoustic one (i.e., sound). Different transduction mechanisms have been proposed and applied, leading to different LS technologies, such as the electrodynamic LS [1], the thermoacoustic LS [2-4], the piezoelectric LS [5], and the piezoresistive LS [6]. Thanks to its superior efficiency (GF0668 standard type of loudspeaker with a sound pressure level (SPL) of 90 dB (300 Hz – 20 kHz)), the electrodynamic LS is nowadays the most widespread technology. The electrodynamic LS is typically constituted by a rigid diaphragm driven by a linear electric motor, transmitting motion to the air molecules and producing sound. The linear motor is implemented by a conductive coil (voice coil) immersed in a static magnetic field. The Lorentz force resulting from a current flow in the voice coil is exploited to put the coil (and thus the diaphragm) into motion. Usually, the voice coil has a solenoidal shape, wrapped around a cylindrical, insulating support, and is rigidly attached to the diaphragm.

In 2015 Yi Li, et.al, [7] proposed fabric/textile based planar electrodynamic LS, which replaced the solenoidal voice coil with a planar conductive looped pattern which effects the sound level performance. In this paper, the rectangular looped pattern spiral coil was chosen and directly printed on top of a 100% polyester woven fabric by dispense printing technique. Noticeably, the fabric material acted both as support for the voice coil and as diaphragm, reducing the size and weight of the device. The speaker was covering the whole audio bandwidth of 20 Hz – 20 kHz with a SPL above 60 dB. Nevertheless, dispense printing is time consuming, expensive, and prevents the fabrication of many samples at a time. By contrast, screen printing is cost effective, faster, and allows batch fabrication of many devices with a single screen. Moreover, it is possible to produce very thin conductive layers on different types of substrates [8]. Screen-printing is also widely used on textile-based substrates for stretchable and wearable electronics [9], potentially employable in LS applications on textiles.

In this work, two different geometries (circular and rectangular) of conductive spirals are fabricated on top of a flexible and transparent polyethylene terephthalate (PET) substrate by screen printing which was not yet investigated as far as our knowledge is concerned. The fabricated spirals are used as planar voice coils, in combination with a ferrite ring magnet, to implement planar electrodynamic LSs (see structure in Fig.1). The SPL frequency response of the proposed LSs is measured with an average SPL of 63 dB and 58 dB (1kHz – 20 kHz), respectively for circular and rectangular LSs. The results are further discussed and compared.

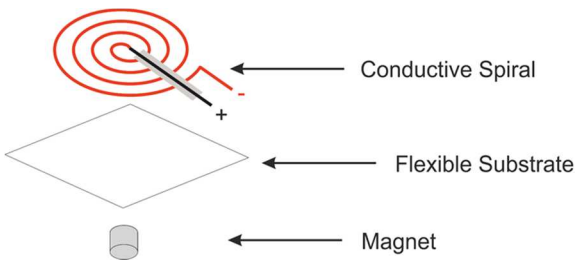

Figure 1: Schematic of the electrodynamic planar loudspeaker with a conductive spiral, a flexible substrate, and a magnet.

Materials and methods

A. Fabrication of spiral voice coils

The spirals are designed in Adobe illustrator and transferred to Vinyl stencils using a Vinyl plotter (Roland GS-24), while a screen with 120 threads/cm^2 (Gewebe 120T) is used to fabricate Ag (Loctite ECI 1010 E&C) spirals on top of 120 µm thick PET (Rauch REPRO) substrate manually with the help of a squeeze. Screen-printed spirals are cured at 120° C for 10 minutes and the connections are made using copper wires. Ag conductive paint (CW2205, Chemtronics) and a glue (Loctite super attack 2054451) are used at the contacts between the

copper wires and the screen-printed Ag.

Circular spirals with linewidths of 1mm, 1.5mm, and 2mm are screen-printed with the same line gap of 1.3mm and same diameter of 88mm for testing purposes. The rectangular spiral with 2mm linewidth with dimensions of 52 x 72 mm with 3mm and 1.3mm spacing on the long and short sides is fabricated for direct comparison with the circular spiral in terms of linewidth.

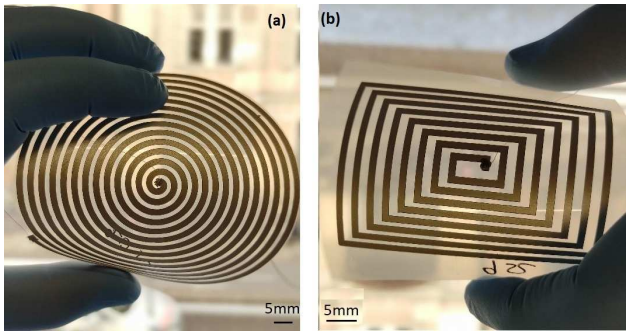

Figure 2: Optical images of screen-printed Ag circular spiral (a), rectangular spiral (b) with a linewidth of 2mm and resistances of 20Ω and 10Ω, respectively.

B. Acoustic response characterization

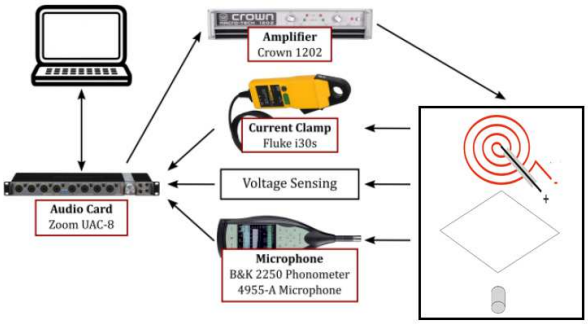

Figure 3: Sound pressure level frequency response measurement setup [2].

The measurement set up for the acoustic characterization of the proposed LSs is shown in Fig.3. A Zoom UAC-8 sound card is used as I/O interface. The input signal is amplified using a Crown 1202 amplifier, while the instantaneous pressure, voltage, and current are simultaneously acquired via the sound card. The pressure signal is measured using a Brüel & Kjær 2250 phonometer equipped with a Brüel & Kjær 4955-A microphone. The voltage signal is conditioned through a buffered voltage divider. The current is measured using a Fluke i30s current clamp. MATLAB is used to control the audio card, generating a stimulus signal and simultaneously acquiring the conditioned signals. An Exponential Sine Sweep (ESS) from 1 kHz to 20 kHz over a 20s is used as stimulus signal [10 -11]. The acquired data is post-processed with the ITA Toolbox [12], obtaining the SPL frequency response at 1W input power.

The SPL frequency response is measured by keeping a ferrite ring permanent magnet (60 mm outer diameter, 24 mm inner diameter, and 16 mm thickness) inside a 3D printed structure. The screen-printed spirals on PET substrate are kept free-standing on top of the structure at 0.5mm from the magnet. The measurements are performed inside an insulating anechoic box ($1.4\times1.5\times1.7$ m^3) and the microphone is placed on-axis of the LS, at 1m distance.

Results and discussion

A. Characterization of spiral voice coils

The circular spirals with 1mm and 1.5mm linewidth are characterized by a high electrical resistance (>50Ω), resulting unsuitable for LS applications. The circular spiral with 2mm linewidth is characterized by a 20Ω electrical resistance, thus it has been chosen to proceed with the experiments since lower resistance gives better sound pressure output [1]. The 2mm linewidth rectangular spiral is characterized by a 10Ω electrical resistance which is suitable for LS application and directly comparable with the 2mm linewidth circular spiral.

Fig.2 shows the screen-printed circular and rectangular spirals with a linewidth of 2 mm. Optical profilometer characterization has shown that the screen-printed layers have a thickness of 26.4 ± 1.1 µm, roughness of 5.04 ± 0.72 µm and a thickness of 22.177 ± 0.047 µm, roughness of 4.64 ± 1.44 µm for rectangular and circular spirals, respectively. There is a slight difference in the thickness due to the manual printing of spirals.

B. Sound pressure frequency response

Figure 4 shows the SPL frequency responses (at 1W input power and 1m distance) of the proposed LSs with circular (blue) and rectangular (red) voice coils. Both the devices exhibits a high-pass behavior, showing a cut-off frequency at approximately 2kHz and a pass-band up to 20kHz.

The circular spiral LS exhibits an average response of 63 dB SPL in the band-pass region, which well compares with normal human conversation SPL. Peaks are clearly visible in the frequency response, reaching up to 73 dB SPL, which are possibly caused by resonances of the diaphragm. By comparison, the rectangular spiral LS exhibits a lower frequency response, with an average of 58 dB SPL, and a larger number of resonances.

The difference in the SPL magnitude can be ascribed to the different interaction between the alternating magnetic field produced by the two spiral voice coils and the static magnetic field from the permanent magnet [1]. As shown in Fig.2, the spacing between the conductive turns is smaller and more uniform in the circular spiral than in the rectangular one. Also, the shape of the permanent

magnet is more compatible with the circular spiral than the rectangular one. This makes the circular spiral voice coil more advantageous for the fabrication of planar electrodynamic LS.

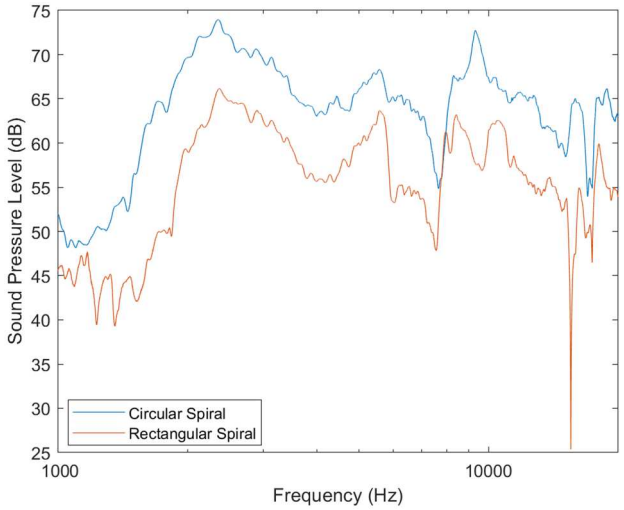

Figure 4: Sound pressure level frequency response of the proposed electrodynamic loudspeakers with circular (blue) and rectangular (red) spiral planar voice coil.

The SPL frequency response also suggests that the coil shape has a significant effect on the mechanical resonances of the PET diaphragm. Even from this perspective, the circular geometry, exhibiting a lower number of resonances, is the most advantageous for the fabrication of planar spiral voice coils. The resonances can thus be attenuated and tuned by properly designing both the diaphragm and the spiral coil, and possibly by fixing the diaphragm to the structure.

Conclusion

Electrodynamic LSs with planar, spiral voice coils have been developed and fabricated using screen printing of conductive inks on a flexible PET substrate. Two geometries for the voice coil spirals, circular and rectangular, have been considered and compared. The SPL frequency response measurements showed that the circular spiral voice coil is more advantageous for the fabrication of electrodynamic LSs, allowing for a larger response (63 dB SPL average) in the 2kHz - 20kHz band and a lower number of resonances. This study also suggests that the frequency response can still be improved by further optimizing of the circular voice coil materials and geometry, and by properly fixing the diaphragm to the underlying structure. The adoption of circular planar voice coils is thus a promising advancement for the fabrication of high-efficiency, high-frequency printed LSs.

Acknowledgments

This project is funded by smart sustainable parasites (SSP) unibz internal project. Authors would like to thank Dr. Christian Ebner and University of Modena Reggio Emilia for their invaluable help.

References

[1] Vance Dickason, "*The Loudspeaker design cookbook*", 7th edition, audio amateur press, New Hampshire, England.

[2] Paolo La Torraca et.al, "Acoustic characterization of laser-induced graphene film thermoacoustic loudspeakers", *IEEE int. conf. on Nanotech*, 2019.

[3] Paolo La Torraca et.al, "High Efficiency Thermoacoustic Loudspeaker Made with a Silica Aerogel Substrate", *Adv. Mater. Technol*, 3, 2018.

[4] Paolo La Torraca et.al, "On the Frequency Response of Nanostructured Thermoacoustic Loudspeakers", *Nanomaterials,* 8, 833, 2018.

[5] H. J. Kim, et.al, "A piezoelectric micro speaker with a high-quality PMN-PT single-crystal membrane," *J. Korean Phys. Soc.*, vol. 54, pp. 930–933, Feb. 2009.

[6] C.S.Lee et.al, "Flexible and transparent organic film speaker by using highly conducting PEDOT/PSS as electrode", *synthetic metals*, 2003.

[7] Yi Li et.al, "Dispenser-printed sound-emitting fabrics for applications in the creative fashion and smart architecture industry", *the journal of the textile institute*, 2019.

[8] Saleem Khan, et.al, "Technologies for Printing Sensors and Electronics Over Large Flexible Substrates: A Review", *IEEE Sens.J*, Vol. 15, No. 6, 2015.

[9] Jari Suikkola et.al, "Screen-Printing Fabrication and Characterization of Stretchable Electronics", *Scientific Reports*, 6:25784, DOI: 10.1038/srep25784.

[10] A. Farina, "Advancements in impulse response measurements by sine sweeps," *Present. 122nd AES conv. Vienna, Austria*, 2007.

[11] A. Farina, "Simultaneous measurement of impulse response and distortion with a swept-sine technique," *Present. 108th AES conv. Paris, Fr.*, 2000.

[12] M. Berzborn et.al, "The ITA-Toolbox: An Open-Source MATLAB Toolbox for Acoustic Measurements and Signal Processing", *Ger.Annu. Conf. Acoust.*, 2017.