POLITECNICO DI TORINO
Repository ISTITUZIONALE

# Development of quantum limited superconducting amplifiers for advanced detection

*Original*
Development of quantum limited superconducting amplifiers for advanced detection / Pagano, Sergio; Barone, Carlo; Borghesi, Matteo; Chung, Woohyun; Carapella, Giovanni; Paola Caricato, Anna; Carusotto, Iacopo; Cian, Alessandro; Di Gioacchino, Daniele; Enrico, Emanuele; Falferi, Paolo; Fasolo, Luca; Faverzani, Marco; Ferri, Elena; Filatrella, Giovanni; Gatti, Claudio; Giachero, Andrea; Giubertoni, Damiano; Greco, Angelo; Kutlu, Caglar; Leo, Angelo; Ligi, C.; Maccarrone, Giovanni; Margesin, Benno; Maruccio, Giuseppe; Matlashov, Andrei; Mauro, Costantino; Mezzena, Renato; Grazia Monteduro, Anna; Nucciotti, Angelo; Oberto, Luca; Pierro, Vincenzo; Piersanti, Luca; Rajteri, Mauro; Rizzato, Silvia; K Semertzidis, Yannis; Uchaikin, Sergey V.; Vinante, Andrea. - In: IEEE TRANSACTIONS ON APPLIED SUPERCONDUCTIVITY. - ISSN 1051-8223. - STAMPA. - 32:4(2022). [10.1109/tasc.2022.3145782]

*Availability:*
This version is available at: 11583/2953672 since: 2022-03-08T17:31:37Z

*Publisher:*
IEEE

*Published*
DOI:10.1109/tasc.2022.3145782

*Terms of use:*

This article is made available under terms and conditions as specified in the corresponding bibliographic description in the repository

*Publisher copyright*
IEEE postprint/Author's Accepted Manuscript

©2022 IEEE. Personal use of this material is permitted. Permission from IEEE must be obtained for all other uses, in any current or future media, including reprinting/republishing this material for advertising or promotional purposes, creating new collecting works, for resale or lists, or reuse of any copyrighted component of this work in other works.

(Article begins on next page)

12 October 2024

12 October 2024

This article has been accepted for publication in IEEE Transactions on Applied Superconductivity. This is the author's version which has not been fully edited and content may change prior to final publication. Citation information: DOI 10.1109/TASC.2022.3145782

# Development of quantum limited superconducting amplifiers for advanced detection

S. Pagano, C. Barone, M. Borghesi, W. Chung, G. Carapella, A.P. Caricato, I. Carusotto, A. Cian, D. Di Gioacchino, E. Enrico, P. Falferi, L. Fasolo, M. Faverzani, E. Ferri, G. Filatrella, C. Gatti, A. Giachero, D. Giubertoni, A. Greco, Ç. Kutlu, A. Leo, C. Ligi, G. Maccarrone, B. Margesin, G. Maruccio, A. Matlashov, C. Mauro, R. Mezzena, A.G. Monteduro, A. Nucciotti, L. Oberto, V. Pierro, L. Piersanti, M. Rajteri, A. Rettaroli, S. Rizzato, Y. K. Semertzidis, S. Uchaikin and A. Vinante

***Abstract*—Ultralow-noise microwave amplification and detection play a central role in different applications, going from fundamental physics experiments to the deployment of quantum technologies. In many applications the necessity of reading multiple detectors, or cavities or qubits, calls for large bandwidth amplifiers with the lowest possible noise. Current technologies are based on High Electron Mobility Transistors and Josephson Parametric Amplifiers. Both have limitations, the former in terms of the minimum noise, the latter in terms of bandwidth. Superconducting Traveling Wave Parametric Amplifiers (TWPAs) have the potential of offering quantum limited noise and large bandwidth. These amplifiers are based on the parametric amplification of microwaves traveling along a transmission line with embedded nonlinear elements.**

**We are developing superconducting TWPAs based both on Josephson junction arrays (Traveling Wave Josephson Parametric Amplifiers) and on nonlinear kinetic inductance (Dispersion Engineered Traveling Wave Kinetic Inductance Amplifiers). Our goal is to achieve large bandwidth (in the 5 to 10 GHz range), large gain (more than 20 dB), large saturation power (more than -50 dBm), and near quantum limited noise (noise temperature less than 600 mK). Current achievements in the design and development of the high performance TWPAs are here reported and discussed, together with current limitations and possible future developments.**

***Index Terms*— Josephson junctions, Microwave amplifiers, Superconducting microwave devices, Superconducting device noise.**

## I. Introduction

ULTRALOW-NOISE microwave amplification and detection play a central role in many advanced applications, mostly

Manuscript receipt and acceptance dates will be inserted here. This work was supported by Italian Institute of Nuclear Physics (INFN) through the DART-WARS project, by the Institute for Basic Science (IBS-R017-D1) of the Republic of Korea, by the European Union's H2020-MSCA Grant No.101027746, H2020 FETOPEN project SUPERGALAX Grant No. 863313, and EMPIR project PARAWAVE Grant No. 17FUN10, by University of Salerno - Italy under the projects FRB19PAGAN and FRB20BARON. *(Corresponding author: Sergio Pagano.)*

C. Barone, and S. Pagano are with Physics Dept., University of Salerno, Fisciano (SA), Italy, with INFN - Gruppo Collegato Salerno, Fisciano (SA) 84084, Italy and with CNR-SPIN Salerno section, 84084 Fisciano (SA), Italy (e-mail: cbarone@unisa.it; spagano@unisa.it).

G. Carapella is with Physics Dept., University of Salerno, Fisciano (SA), Italy, and with INFN - Gruppo Collegato Salerno, Fisciano (SA) 84084, Italy (e-mail: gcarapella@unisa.it).

G. Filatrella is with Science and Technology Dept., University of Sannio, 82100 Benevento, Italy and with INFN - Gruppo Collegato Salerno, 84084 Fisciano (SA), Italy (e-mail: filatr@unisannio.it).

M. Borghesi, M. Faverzani, E. Ferri, A. Giachero and A. Nucciotti are with Physics Dept., University of Milano-Bicocca, 20126 Milano, Italy and INFN - Sezione di Milano Bicocca, 20126 Milano, Italy (e-mail: matteo.borghesi@unimib.it; marco.faverzani@unimib.it; elena.ferri@unimib.it; andrea.giachero@unimib.it; angelo.nucciotti@unimib.it).

A.P. Caricato, A. Leo, G. Maruccio, A. Monteduro and S. Rizzato are with Mathematics and Physics Dept., University of Salento, 73100 Lecce, Italy and with INFN – Sezione di Lecce, 73100 Lecce, Italy (e-mail: annapaola.caricato@unisalento.it;angelo.leo@unisalento.it;giuseppe.maruccio@unisalento.it; annagrazia.monteduro@unisalento.it; silvia.rizzato@unisalento.it)

D. Di Gioacchino, C. Gatti, C. Ligi, G. Maccarrone and L. Piersanti are with INFN - Laboratori Nazionali di Frascati, 00044 Frascati (RM), Italy (e-mail: daniele.digioacchino@lnf.infn.it; claudio.gatti@lnf.infn.it; carlo.ligi@lnf.infn.it; giovanni.maccarrone@lnf.infn.it; luca.piersanti@lnf.infn.it)

C. Mauro is with INFN - Gruppo Collegato Salerno, 84084 Fisciano (SA), Italy (email: cmauro@na.infn.it)

E. Enrico and L. Oberto are with INRiM - Istituto Nazionale di Ricerca Metrologica, 10135 Torino, Italy and with INFN - TIFPA, 38123 Povo (TN), Italy (email: e.enrico@inrim.it; l.oberto@inrim.it)

M. Rajteri is with INRiM - Istituto Nazionale di Ricerca Metrologica, 10135 Torino, Italy and with INFN - Sezione di Torino, 10125 Torino, Italy (email: m.rajteri@inrim.it)

L. Fasolo and A. Greco are with INRiM - Istituto Nazionale di Ricerca Metrologica, 10135 Torino, Italy and with Politecnico di Torino, 10129 Torino, Italy (email: luca_fasolo@polito.it; angelo.greco@polito.it)

R. Mezzena is with Physics Dept., University of Trento, 38123, Povo (TN), Italy and with INFN - TIFPA, 38123 Povo (TN), Italy (email: renato.mezzena@unitn.it)

A. Cian, D. Giubertoni and B. Margesin are with Fondazione Bruno Kessler, 38123 Povo (TN), Italy and with INFN - TIFPA, 38123 Povo (TN), Italy (email: acian@fbk.eu; giuberto@fbk.eu; margesin@fbk.eu)

P. Falferi and A. Vinante are with Fondazione Bruno Kessler, 38123 Povo (TN), Italy, with CNR IFN, 38123 Povo (TN), Italy and with INFN - TIFPA, 38123 Povo (TN), Italy (email: paolo.falferi@unitn.it; andrea.vinante@ifn.cnr.it)

I. Carusotto is with CNR INO, 38123 Povo (TN), Italy and with Physics Dept., University of Trento, 38123, Povo (TN), Italy (email: iacopo.carusotto@ino.cnr.it)

V. Pierro is with Engineering Dept., University of Sannio, 82100 Benevento, Italy and with INFN - Gruppo Collegato Salerno, 84084 Fisciano (SA), Italy (email: pierro@unisannio.it)

S. Uchaikin, W. Chung and A. Matlashov are with Center for Axion and Precision Physics Research, Institute for Basic Science (IBS), Daejeon 34051, Republic of Korea (email:uchaikin@ibs.re.kr, gnuhcw@ibs.re.kr, andrei@ibs.re.kr)

Y.K. Semertzidis is with Center for Axion and Precision Physics Research, Institute for Basic Science (IBS) and with Department of Physics, Korea Advanced Institute of Science and Technology (KAIST), Daejeon 34051, Republic of Korea (email: yannis@kaist.ac.kr)

Ç. Kutlu is with Department of Physics, Korea Advanced Institute of Science and Technology (KAIST) and with Center for Axion and Precision Physics Research, Institute for Basic Science (IBS), Daejeon 34051, Republic of Korea (email: caglar@kaist.ac.kr)

A. Rettaroli is with INFN - Laboratori Nazionali di Frascati, 00044 Frascati (RM), Italy and with Mathematics and Physics Dept., University of Roma Tre, 00146 Roma, Italy, (e-mail: alessio.rettaroli@uniroma3.it)

Color versions of one or more of the figures in this paper are available online at http://ieeexplore.ieee.org.

Digital Object Identifier will be inserted here upon acceptance.

© 2022 IEEE. Personal use is permitted, but republication/redistribution requires IEEE permission. See https://www.ieee.org/publications/rights/index.html for more information.

This article has been accepted for publication in IEEE Transactions on Applied Superconductivity. This is the author's version which has not been fully edited and content may change prior to final publication. Citation information: DOI 10.1109/TASC.2022.3145782

for fundamental physics experiments, such as: detection of Dark Matter, Axion, Dark Photons, neutrinos, Cosmic Microwave Background radiation, Magnons [1],[2], but also are key factors for the deployment of quantum technologies, and in particular for the Qubit readout [3]. In many of these applications, especially when imaging detectors are employed, the necessity of reading multiple detectors, or cavities or qubits, calls for **large bandwidth** amplifiers with the **lowest possible noise**.

## II. Low Noise Microwave Amplifiers

When detecting low amplitude signals, it is important to have a low noise amplification chain. In the optimal case, the first amplifier of the chain is the one that determines the noise performances, therefore is highly desirable to achieve, especially in microwave regime, quantum-limited added noise and high gain at the first stage of amplification.

Amplifiers based on **High Electron Mobility Transistors** (HEMT) are widely used. They provide good bandwidth and large dynamic range at microwave frequencies. However, their intrinsically dissipative operation has a negative impact on the generated noise. Cooling helps reducing the noise. However, the improvement in noise temperature becomes negligible below 20-30 K. Current HEMT noise is 10–40 times above the fundamental limit imposed by quantum mechanics, resulting into equivalent noise temperature from 2 to 5 K [4].

Superconducting amplifiers, being almost non dissipative, can be good alternatives. In a **Josephson Parametric Amplifier** (JPA) the power is transferred from a strong pump tone to a weak signal by exploiting the nonlinearity provided by Josephson tunnel junction and the mixing process. A quantum limited noise level has been demonstrated. However, JPA often show trade-offs in other figures of merit, such as bandwidth (limited to about 100 MHz), dynamic range, and linearity [5],[6]. Because of their extremely good noise performances, JPAs are widely used to read qubits [3]. Their small bandwidth, however, allows the reading of single or few qubits per amplifier, representing a limiting factor for the scaling up of quantum processors. JPAs have also been proposed for axion detection experiments, through photon conversion in a microwave cavity. Also in this case, the amplifier bandwidth limits the possibility to scale up the experiment to array of cavities [7].

Superconducting **Traveling Wave Parametric Amplifiers** (TWPAs) have the potential of offering quantum limited noise and large bandwidth [8],[9]. Superconducting TWPAs are based on the parametric amplification of microwaves traveling along a transmission line with embedded nonlinear elements, that can be implemented by Josephson junctions or by superconducting microstrips with large kinetic inductance. In both cases, the current dependence of the inductance is responsible of the mixing and parametric amplification. As with the JPA, a large amplitude pump tone, at frequency $fp$, together with the weak signal to be amplified, at frequency $fs$, are sent to the device. The current of the large pump tone modulates the nonlinear inductance, coupling the pump to the signal, and, if the TWPA is properly designed, produces, by frequency mixing, an amplification of the signal at frequency $fs$, as well as the generation of an idler tone at frequency $fi$. Depending on the current dependence of the nonlinearity employed, it is possible to realize different mixing processes. A four-wave mixing (4WM) process, where the relation between the involved frequencies is: $2\,fp = fs + fi$ or a three wave mixing (3WM) process, where the relation is: $fp = fs + fi$. These relations represent the energy conservation of the photons involved in the mixing process. Momentum conservation requires a similar relation for the wavevectors $k$, in the 4WM mode: $2\,kp = ks + ki$. This is also known as **phase matching condition** and is essential to achieve signal amplification. Phase matching is automatically satisfied if the transmission line is not dispersive and for zero pump power, but in this case there is no amplification. In real cases (dispersive transmission lines and non-negligible rf pump power), additional elements must be added to the transmission lines to achieve the phase matching condition, e.g. by engineering the dispersion relation. The specific modifications implemented depend on the type of TWPA.

**Dispersion engineered Traveling Wave Kinetic Inductance Parametric Amplifiers** (DTWKIPA) exploits the nonlinear kinetic inductance of superconducting films (usually TiN or NbTiN). Phase matching can be obtained by periodic loading the transmission line. This introduces stop bands in the TL spectrum which allows to achieve phase matching, by tuning $fp$ close to one stop band, and to eliminate higher harmonics of $fp$, reducing possibility of shock waves [10],[17]. Typical obtained results are: noise near to quantum limited, large bandwidth, over a 6 GHz centred at 11 GHz, and large dynamic range, from -50 to -60 dBm. However, the weak nonlinearity of the kinetic inductance requires very long transmission lines (up to 1 m), that limit the integration capability. Moreover, the maximum gain is limited (<20 dB) and its frequency profile has large ripples, due to poor impedance matching and signal back propagation. Besides the 4WM, the 3WM process has also been successfully implemented by means of several solutions [11],[12]. DTWKIPA have been proposed for MKID [13],[14] and qubit readout [15].

**Traveling Wave Josephson Parametric Amplifiers** (TWJPA) implement as a nonlinear element a Josephson junction [16]–[18] or a SQUID [19]–[24] and a capacitive shunt to ground. The nonlinearity introduced by the Josephson junction, or the SQUID, is larger than that due to kinetic inductance, allowing shorter transmission lines and, consequently, lower pump power and dissipation. Moreover, the additional degree of freedom introduced using a SQUID (with one or more junctions in the loop), allows to tune the nonlinearity to achieve both 4WM and 3WM processes. As with the DTWKIPA, to obtain phase matching a modification of the dispersion relation is necessary, for instance by periodic loading the transmission line. Typical obtained results are almost quantum-limited noise and large bandwidth (over a 6 GHz centered at 7 GHz). However, the gain is limited (<20 dB) as well as the dynamic range (<−90 dBm). A comprehensive review of TWJPAs can be found in [25] and in [26].

© 2022 IEEE. Personal use is permitted, but republication/redistribution requires IEEE permission. See https://www.ieee.org/publications/rights/index.html for more information.

This article has been accepted for publication in IEEE Transactions on Applied Superconductivity. This is the author's version which has not been fully edited and content may change prior to final publication. Citation information: DOI 10.1109/TASC.2022.3145782

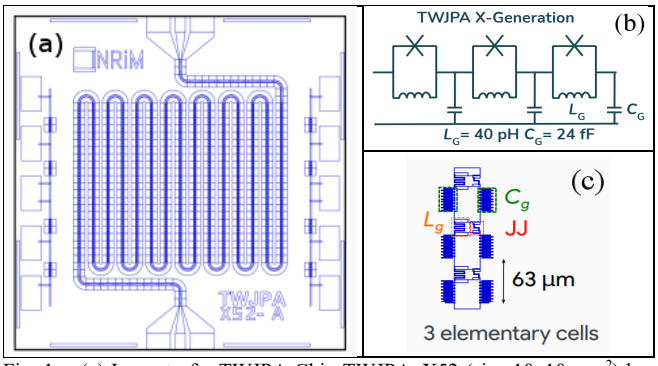


Fig. 1. (a) Layout of a TWJPA Chip TWJPA_X52 (size 10x10 mm$^2$) based on a sequence of 990 elementary cells each formed by an RF-SQUID in series and an interdigital capacitor to ground. (b) Equivalent circuit of 3 elementary cells. (c) layout of 3 elementary cells.

## III. The DARTWARS Project

### A. Project description

The DARTWARS project [27] is a coordinated effort of several institutions, started in January 2020 and financed by I.N.F.N. – Italy. It aims to develop superconducting TWPAs based both on Josephson junction structures (TWJPA) and on nonlinear kinetic inductance (DTWKIPA) with large bandwidth (in the 5 to 10 GHz range), large gain (more than 20 dB) with reduced ripple, large input saturation power (more than -50 dBm), near quantum limited noise (noise temperature less than 600 mK) and a good fabrication yield.

The project is focused on the design of the transmission lines using specific features to optimize the microwave coupling and to optimize the gain flatness. Moreover, it is also focused on the fabrication techniques of the superconducting materials and of the Josephson junctions in order to optimize the devices performances.

The principal objectives of the DARTWARS project are:
(1) the practical development of high performing parametric amplifiers, both DTWKIPA and TWJPA, by exploring new design solutions, new materials and advanced fabrication processes;
(2) The read-out demonstration of various detectors/components (TESs, MKIDs, microwave cavities and qubits) with improved performances with respect to current technologies.

### B. Results

In Fig. (1a) is shown the layout of the first version of TWJPA realized at INRiM. The basic cell is formed by an RF-SQUID in series and a capacitor to ground. Fig. (1b) represents the equivalent circuit of 3 cells while in Fig(1c) their layout is shown. The superconducting material used is Aluminium and the Josephson junctions are based on an Al/AlOx/Al structure realized using a shadow mask deposition (Niemeyer–Dolan technique) [28] –[29]. The substrate is a (1,0,0) silicon wafer covered with 500 nm of thermally grown $SiO_2$. The realized TWJPA contains of 990 cells in series. The device has been tested at 10 mK at the INFN-LNF COLDLAB facility. Fig. (2) shows a block diagram of the dilution refrigerator used for the experiment. The TWJPA is anchored on the 10 mK stage in a

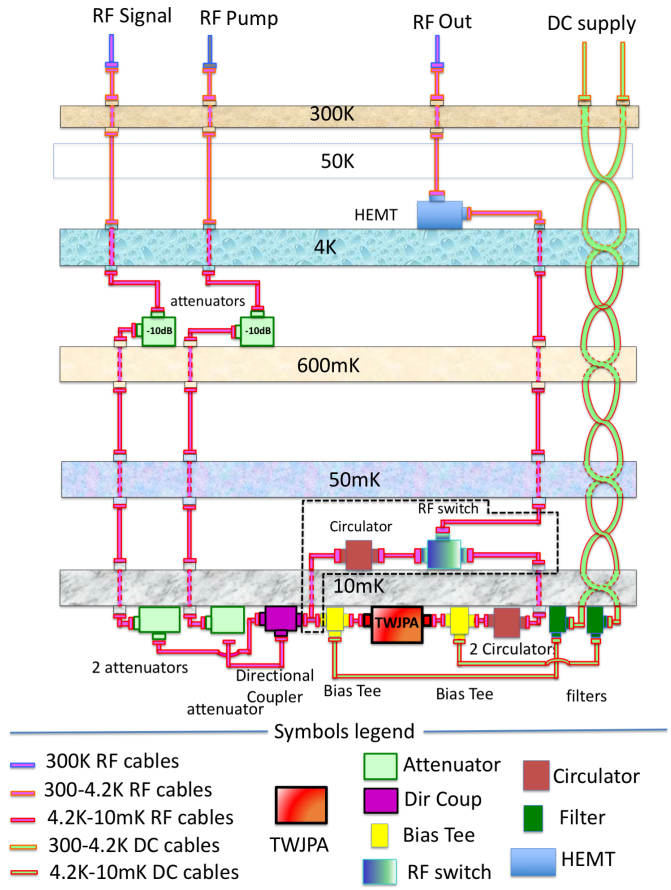


Fig. 2. Block diagram of the temperature stages and wiring of the 10 mK cryostat used for the experiments.

superconducting shielding box. The RF pump and signal are generated by room temperature instrumentation and sent to the amplifier through a series of attenuators (at 4K and at 10mK) and a directional coupler at 10 mK. Two bias tees (also at 10 mK) allow to apply a DC current to the amplifier. The output signal is sent, through a cryogenic circulator at 10 mK, to a HEMT amplifier at 4K and then to a room temperature spectrum analyzer.

In Fig. (3a) is shown the amplitude of the 3WM and 4WM idlers measured as a function of the DC bias current ranging between −50 uA and +50 uA. The pump tone is set to 6.8 GHz with power of -52 dBm while the signal tone is set to 3.3 GHz with power of -64 dBm, all referred to the amplifier input, and this sets the 3WM idler frequency to 3.5 GHz and the 4WM idler to 10.3 GHz. The possibility to send a DC current to the RF-SQUIDS in the TWJPA allows to tune their nonlinearity in order to generate 4WM and 3WM processes. When the DC bias current flows through the nonlinear transmission line, the inductance of each cell changes, in a periodic manner due to the SQUID behavior [19],[30]. The periodicity corresponds ideally, in our device, to 46 µA, the distance between the two vertical dashed lines in Fig.3a. This modifies the nonlinearity of the transmission line, allowing 3WM and 4WM modes of operation, and clearly demonstrate the possibility to tune the TWJPA device with a simple DC current to activate the wanted mixing process [21]. According to analytical models (see e.g.

© 2022 IEEE. Personal use is permitted, but republication/redistribution requires IEEE permission. See https://www.ieee.org/publications/rights/index.html for more information.

This article has been accepted for publication in IEEE Transactions on Applied Superconductivity. This is the author's version which has not been fully edited and content may change prior to final publication. Citation information: DOI 10.1109/TASC.2022.3145782

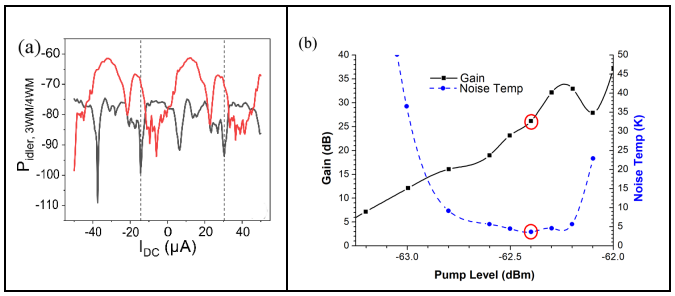


Fig. 3. (a) Power of the 3WM (black) and 4WM (red) idlers measured as a function of the DC bias current. The pump tone is set to 6.8 GHz with power of -52 dBm while the signal tone is set to 3.3 GHz with power of -64 dBm, this sets the 3WM idler frequency to 3.5 GHz and the 4WM idler to 10.3 GHz. (b) Measured response of the TWJPA operating in the 3WM mode with a signal at frequency $f = fp/2$ = 8.9875 GHz and a DC bias point of -13.4 μA. The signal gain is shown by the full curve and left axis, the noise temperature by the dashed curve and right axis. The red circles highlight the pump amplitude corresponding to best measured noise temperature.

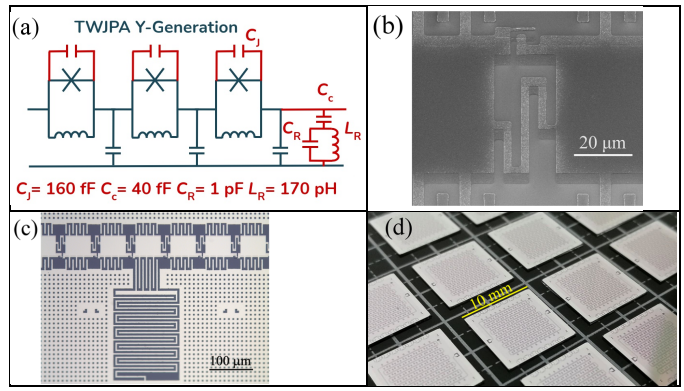


Fig. 4. New design of TWJPA. (a) schematic diagram of the basic structure with elements values. (b) SEM picture of the RF SQUID. (c) microphotograph of a section of the TWJPA where the periodic loading circuit is visible. (d) a picture of the realized chip, of size 10x10 mm$^2$.

[30]), the modulation of the signal levels reported in Fig. (3a) should be strictly periodic, with the period indicated by the dashed lines. This is only partially true in the experiments, the deviation being attributed to scattering of the circuit parameters in the device fabrication. The detailed understanding of the deviation of the experimental data from the expected ones is under investigation.

Fig. (3b) reports the measured response of the TWJPA operating in the 3WM mode. The pump frequency is fixed at 17.975 GHz and its amplitude is swept from -63.3 dBm to -61.8 dBm. The signal gain is reported by the full curve and left axis, while the corresponding noise temperature, of the whole RF chain, by the dashed curve and right axis. Signal gain and noise have been calibrated by measuring the coaxial lines attenuation and HEMT gain both at room temperature and during cryostat operation. The estimated error is 2 dB in gain and 1.5 K in noise temperature. The red circles highlight the pump amplitude corresponding to best measured noise temperature. The best resulting value is, in terms of noise temperature, 4K, with a gain of 25 dB. This is not satisfactory and is most probably due to a, later discovered, malfunctioning of the employed attenuators at low temperatures. Moreover, we have indication of a significative impedance mismatch between the input and output coaxial lines and the TWJPA amplifier. This introduces non ideal bandwidth and gain responses. However, the preliminary result reported here is encouraging as it gives clear clues for improvement of the amplifier performances.

After the initial tests a second chip has been designed and fabricated at INRiM. The new design was specifically made to reduce higher harmonics generation and unwanted mixing products, by lowering the Josephson plasma frequency and making the dispersion relation highly nonlinear with the introduction of elements to induce resonant phase matching [17]. Fig. (4a) reports a schematic diagram of 3 cells with the load (in red to the right). The values of the various elements are also reported. The design values of junction critical currents were 4 μA. Fig. (4b) shows a SEM picture of the RF-SQUID realized using Al-based junctions and shadow evaporation technique. Fig. (4c) show a picture of a sequence of 7 cells with one loading structure. Finally, Fig. (4d) shows a picture of the finished chip.

For the realization of DTWKIPA it has been chosen to implement an artificial transmission line with lumped elements. The advantage of the lumped elements approach is a shorter transmission line: 20 cm vs. 1-2 m, which allows to reduce the pump power [12]. This reduces the device heating with a consequent reduction of the gain ripple and improvement of the yield. Additionally, to reduce the dielectric losses, the DTWKIPA will be fabricated on ultra-low-loss single-crystal silicon dielectrics fabricated on a silicon-on-insulator (SOI) wafer. The superconducting material chosen for the realization of the amplifier is NbTiN, which has a relatively high kinetic inductance. In order to obtain good superconducting properties, the film deposition process is being optimized, by testing different types of target materials and different process parameters (substrate temperature, plasma power, sputtering gases pressures and flows). This activity is currently ongoing at the FBK facility.

## IV. Conclusion

TWPA are promising candidates as quantum limited microwave amplifiers for applications in fundamental physics experiments and quantum computing. However, current performances of both TWJPA and DTWKIPA still need to be improved in terms of gain and bandwidth. Several TWJPA have been designed and fabricated using RF-SQUID as basic cells and different layouts for engineering the dispersion relation. DTWKIPA are being designed using an artificial lumped elements transmission line layout and different superconducting materials are being tested. We believe that the coordinated approach of several institutions to the design, simulation, realization and testing of TWPA can lead to the realization of working devices ready to be used in applications.

© 2022 IEEE. Personal use is permitted, but republication/redistribution requires IEEE permission. See https://www.ieee.org/publications/rights/index.html for more information.

This article has been accepted for publication in IEEE Transactions on Applied Superconductivity. This is the author's version which has not been fully edited and content may change prior to final publication. Citation information: DOI 10.1109/TASC.2022.3145782

## REFERENCES


[1] A. Caldwell *et al.*, "Dielectric Haloscopes: A New Way to Detect Axion Dark Matter," *Phys. Rev. Lett*., vol. 118, no. 9, Mar. 2017, Art. no. 091801, doi: 10.1103/PhysRevLett.118.091801.

[2] J. Hubmayr et al., "Low-Temperature Detectors for CMB Imaging Arrays," *J. Low Temp. Phys.*, vol. 193, pp. 633–647, Aug. 2018, doi: 10.1007/s10909-018-2029-6.

[3] P. Krantz *et al.*," A quantum engineer's guide to superconducting qubits," *Appl. Phys. Rev.*, vol. 6, no. 2, May 2019, Art. no. 021318; doi: 10.1063/1.5089550.

[4] J. Schleeh *et al.*, "Cryogenic noise performance of InGaAs/InAlAs HEMTs grown on InP and GaAs substrate," *Solid-State Electron.*, vol. 91, pp. 74-77, Jan. 2014, doi: 0.1016/j.sse.2013.10.004.

[5] F. Lecocq *et al.*, "Nonreciprocal Microwave Signal Processing with a Field-Programmable Josephson Amplifier," *Phys. Rev. Appl.*, vol. 7, no. 2, Feb. 2017, Art. no. 024028, doi: 10.1103/PhysRevApplied.7.024028.

[6] J. Aumentado, "Superconducting Parametric Amplifiers: The State of the Art in Josephson Parametric Amplifiers," *IEEE Microw. Mag.*, vol. 21, no. 8, pp. 45–59, Aug. 2020, doi: 10.1109/MMM.2020.2993476.

[7] S. Al Kenany *et al.*, "Design and operational experience of a microwave cavity axion detector for the 20-100 μeV range," *Nucl. Instrum. and Meth. in Phys. Res. A*, vol. 854, pp. 11-24, May 2017, doi: 10.1016/j.nima.2017.02.012.

[8] A.L. Cullen, "Theory of the travelling-wave parametric amplifier," *Proc. of IEE - Part B: Electron. and Commun. Eng*, vol. 107, no. 32, pp. 101-107, May 1960, doi: 10.1049/pi-b-2.1960.0085.

[9] M. Sweeny and R. Mahler, "A travelling-wave parametric amplifier utilizing Josephson junctions," *IEEE Trans. on Magn*., vol. 21, no. 2, pp. 654-655, March 1985, doi: 10.1109/TMAG.1985.1063777.

[10] B. Ho Eom *et al.*, "A wideband, low-noise superconducting amplifier with high dynamic range," *Nature Phys*., vol. 8, pp. 623–627, Aug. 2012, doi: 10.1038/nphys2356.

[11] M. R. Vissers *et al.*, " Low-noise kinetic inductance traveling-wave amplifier using three-wave mixing," *Appl. Phys. Lett.*, vol. 108, Jan. 2016, Art. no. 012601, doi: 10.1038/nphys2356.

[12] M. Malnou *et al.*, "Three-Wave Mixing Kinetic Inductance Traveling-Wave Amplifier with Near-Quantum-Limited Noise Performance," *PRX Quantum*, vol. 2, no. 1, Jan. 2021, Art. no. 010302, doi: PRXQuantum.2.010302.

[13] C. Bockstiegel *et al.*, " Development of a Broadband NbTiN Traveling Wave Parametric Amplifier for MKID Readout," *J. Low Temp. Phys.*, vol. 176, no. 3-4, pp. 476–482, Jan. 2014, Art. no. 010302, doi: 10.1007/s10909-013-1042-z.

[14] N. Zobrist *et al.*, " Wide-band parametric amplifier readout and resolution of optical microwave kinetic inductance detectors," *Appl. Phys. Lett.*, vol. 115, no. 4, Jul. 2019, Art. no. 042601, doi: 10.1063/1.5098469.

[15] L. Ranzani *et al.*, " Wide-band parametric amplifier readout and resolution of optical microwave kinetic inductance detectors," *Appl. Phys. Lett.*, vol. 113, no. 24, Dec. 2018, Art. no. 242602, doi: 10.1063/1.5063252.

[16] C. Macklin *et al.*, " A near−quantum-limited Josephson traveling-wave parametric amplifier," *Science*, vol. 350, no. 6258, pp. 307-310, Oct. 2015, doi: 10.1126/science.aaa8525.

[17] Kevin O'Brien *et al.*, "Resonant Phase Matching of Josephson Junction Traveling Wave Parametric Amplifiers," *Phys. Rev. Lett.*, vol. 113, no. 15, Oct. 2014, Art. no. 157001, doi: 10.1103/PhysRevLett.113.157001.

[18] O. Yaakobi *et al.*, "Parametric amplification in Josephson junction embedded transmission lines," *Phys. Rev. B*, vol. 87, no. 14, Apr. 2013, Art. no 144301, doi: 10.1103/PhysRevB.87.144301.

[19] A. B. Zorin, "Josephson Traveling-Wave Parametric Amplifier with Three-Wave Mixing," *Phys. Rev. Appl.*, vol. 6, no. 3, Sep. 2016, Art. no. 034006, doi: 10.1103/PhysRevApplied.14.034058.

[20] T. Dixon *et al*, "Capturing Complex Behavior in Josephson Traveling-Wave Parametric Amplifiers," *Phys. Rev. Appl.*, vol. 14, no. 3, Sep. 2020, Art. no. 034058, doi: 10.1103/PhysRevApplied.6.034006.

[21] A. B. Zorin, "Flux-Driven Josephson Traveling-Wave Parametric Amplifier," *Phys. Rev. Appl.*, vol. 12, no. 4, Oct. 2019, Art. no. 044051, doi: 10.1103/PhysRevApplied.12.044051.

[22] M. T. Bell and A. Samolov, "Traveling-Wave Parametric Amplifier Based on a Chain of Coupled Asymmetric SQUIDs," *Phys. Rev. Appl.*, vol. 4, no. 2, Aug. 2015, Art. no. 024014, doi: 10.1103/PhysRevApplied.4.024014.

[23] L. Planat *et al.*, "Photonic-Crystal Josephson Traveling-Wave Parametric Amplifier," *Phys. Rev. X*, vol. 10, no. 2, Apr. 2020, Art. no. 021021, doi: 10.1103/PhysRevX.10.021021.

[24] N. E. Frattini *et al*, "Optimizing the Nonlinearity and Dissipation of a SNAIL Parametric Amplifier for Dynamic Range," *Phys. Rev. Appl.*, vol. 10, no. 5, Nov. 2018, Art. no. 054020, doi: 10.1103/PhysRevApplied.10.054020.

[25] L. Fasolo, A. Greco and E. Enrico, "Superconducting Josephson-Based Metamaterials for Quantum-Limited Parametric Amplification: A Review," in Advances in Condensed-Matter and Materials Physics - Rudimentary Research to Topical Technology, J. Thirumalai and S. I. Pokutnyi Ed., IntechOpen, Rijeka, Croatia, 2020, doi: 10.5772/intechopen.89305.

[26] M. Esposito *et al*, "Perspective on traveling wave microwave parametric amplifiers," *Appl. Phys. Lett.,* vol. 119, no. 12, Art. no. 120501, Sept. 2021, doi: 10.1063/5.0064892.

[27] A. Giachero *et al*, "Detector Array Readout with Traveling Wave AmplifieRS", arXiv:2111.01512 [cond-mat.supr-con] (accessed Dec. 9, 2021).

[28] J. Niemeyer and V. Kose, "Observation of large dc supercurrents at nonzero voltages in Josephson tunnel junctions," *Appl. Phys. Lett.*, vol. 29, no. 6, pp. 380-381, Sep. 1976, doi: 10.1063/1.89094.

[29] G. J. Dolan, "Offset masks for lift-off photoprocessing," *Appl. Phys. Lett.*, vol. 31, no. 5, pp. 337-339, Sep. 1977, doi: 10.1063/1.89690.

[30] A. Greco, L. Fasolo, A. Meda, L. Callegaro, and E. Enrico, "Quantum model for rf-SQUID-based metamaterials enabling three-wave mixing and four-wave mixing traveling-wave parametric amplification," *Phys. Rev. B*, vol. 104, no. 18, Nov. 2021, Art. no 184517, doi: 10.1103/PhysRevB.104.184517.


© 2022 IEEE. Personal use is permitted, but republication/redistribution requires IEEE permission. See https://www.ieee.org/publications/rights/index.html for more information.