POLITECNICO DI TORINO
Repository ISTITUZIONALE

Patch Antenna Array Design through Bottom-Up and Bayesian Optimizations

Original
Patch Antenna Array Design through Bottom-Up and Bayesian Optimizations / Kouhalvandi, Lida; Mir, Farzad; Matekovits, Ladislau. - ELETTRONICO. - (2021), pp. 779-780. (Intervento presentato al convegno 2021 IEEE International Symposium on Antennas and Propagation and USNC-URSI Radio Science Meeting (APS/URSI) tenutosi a Singapore, Singapore nel 4-10 Dec. 2021) [10.1109/APS/URSI47566.2021.9703781].

Availability:
This version is available at: 11583/2957155 since: 2022-03-04T10:40:36Z

Publisher:
IEEE

Published
DOI:10.1109/APS/URSI47566.2021.9703781

Terms of use:

This article is made available under terms and conditions as specified in the corresponding bibliographic description in the repository

Publisher copyright
IEEE postprint/Author's Accepted Manuscript

©2021 IEEE. Personal use of this material is permitted. Permission from IEEE must be obtained for all other uses, in any current or future media, including reprinting/republishing this material for advertising or promotional purposes, creating new collecting works, for resale or lists, or reuse of any copyrighted component of this work in other works.

(Article begins on next page)

12 October 2024

Patch Antenna Array Design through Bottom-Up and Bayesian Optimizations

Lida Kouhalvandi[1*], Farzad Mir[2*], and Ladislau Matekovits[3* # ◇]
[*] *Department of Electronics and Telecommunications, Politecnico di Torino, Turin, Italy*
[#] *Department of Measurements and Optical Electronics, Politehnica University Timisoara, Timisoara, Romania*
[◇] *Istituto di Elettronica e di Ingegneria dell'Informazione e delle Telecomunicazioni, National Research Council, Turin, Italy*
lida.kouhalvandi@ieee.org[1], farzad.mir@studenti.polito.it[2], ladislau.matekovits@polito.it[3]

***Abstract*—This paper presents the design and the optimization of a 2 ×2 antenna array through two optimization techniques, namely bottom-up optimization (BUO) and Bayesian optimization (BO). These sequential optimizations tackle the difficulty problem of antenna array design by predicting the suitable number of single radiators and by sizing the configuration of feeding circuit using BUO and BO methods, respectively. The proposed method leads to the design of high performance antenna arrays in terms of bandwidth, gain and radiated patterns where all the overall optimization process is performed with the combination of electronic design automation tool and a numerical analyzer. To validate the proposed method, a patch antenna array is designed and optimized in a frequency band from 12.9 GHz to 13.7 GHz with the maximum gain of 17.9 dB in the considered band.**

***Index Terms*—array antenna, artificial neural network, Bottom-up optimization (BUO), Bayesian optimization (BO), feeding circuit.**

I. Introduction

Powerful mobile networks play an important role in the wireless industry; future generation networks will be even more challenging. These networks require antennas with wide bandwidth and high-gain performances suitable for long distance communications. Patch antenna arrays are appropriate for these communication systems. Hence, the design of high performance antenna array becomes an important challenge to be solved. Recently, functional surrogate modeling techniques, that include artificial neural network (ANN), are applied in the field of electromagnetic (EM) engineering. These methods are fast and reliable in predicting the values of design parameters and they are powerful in optimizing complex designs as power amplifier, single antenna, and antenna arrays [1]–[4].

This paper presents a promising solution for optimizing an antenna array using two optimization methods: *bottom-up optimization (BUO)* for determining the optimal number of single antennas [5] and *Bayesian optimization (BO)* for sizing the feeding network of the array configuration. The optimization process is performed with the combination of electronic design automation (EDA) tool and a numerical analyzer that provides an automated optimization process. The proposed optimization method paves the way of designers in automatically modeling the antenna array and optimizing the feeding network without dependency to any designer's experience. This work is organized as follows: Section II presents the optimization method in the antenna array design using the BUO and the ANN. Section III presents the simulation results of the optimized antenna using the proposed method. The last section is devoted to the conclusion.

II. Antenna Design

This section presents the design strategy for designing and optimizing the antenna array with optimal number of single antennas and the best feeding circuit that result in high performance antenna array. Algorithm 1 provides the summary of the proposed method with the described sequential steps.

A. Single antenna with sample antenna array designs

Firstly, a single microstrip antenna is designed in a commercial EDA tool, here Microwave Studio (Dassault Systèmes) (Step-1). After designing a single microstrip antenna, one sample of array configuration (1 × 2 or 2 × 1) must be provided for training and constructing the ANN including the parameters of the feeding circuit (Step-2).

B. Antenna array optimization using BUO and BO methods

One of the important requirement of the ANN for accurately modeling the antenna array is the existence of suitable amount of *training dataset*. For this case, an automated environment consisting of the combination of EDA tool and numerical analyzer is created (Step-3). In this work, MATLAB tool is used as a numerical analyzer and Microwave Studio that simulates the antenna array is working in the background and generates the antenna's results in term of scattering parameter (S-parameter), gain, radiation pattern (RP) in both the E- and H-plane, and send these outcomes to the MATLAB for analysis. The training dataset is generated using Latin hypercube sampling technique within the ± 10 range [6], for the defined parameters of feeding network in the designed sample antenna array. With this approach, suitable amount of data is generated that leads to model the sample antenna with ANN (Step-4). After constructing the ANN, the number of single antennas are increased sequentially using the BUO method (Step-5) and the BO method is employed for achieving optimal parameters of feeding circuit in the array configuration (Step-6). If the desired design specifications in terms of S_{11}, gain, and RPs are not achieved, the BUO method is applied to increase the number of single antennas and re-apply the BO method for determining the parameters of feeding network (Step-7).

Algorithm 1: Antenna array optimization

1: Design a single microstrip antenna in the EDA tool;
2: Design a sample antenna array (i.e., 1×2 or 2×1 configuration) with appropriate feeding circuit;
3: Prepare the co-simulation environment between the EDA tool and the numerical analyzer;
4: Extract suitable amount of data for constricting the ANN of designed sample antenna array in Step-2;
5: Increase the number of single antennas sequentially with the BUO method;
6: Apply the BO method using the ANN for predicting suitable design parameters of the feeding circuit;
7: If the suitable output results are not achieved, go to Step-5 and run the algorithm.

III. Simulation Results

This section presents the simulation results of an optimized 2×2 slotted antenna array that is suitable for small satellites, e.g., cubesats, operating at Ku frequency band. The optimized antenna array is placed on the full ground plane where each single antenna is implanted over a Taconic TSM-30-0600-C1/C2 with relative permittivity ε_r=3 and of height of 1.52 mm. Figure 1 shows the configuration of optimized antenna where the feeding network is placed behind the ground plane and it is optimized using the proposed ANN. The feeding circuit combines two vertical single antennas with two 100 Ω T-junction using a narrow transmission line of R_{feed1}=1.6 mm where the single antennas are matched to 50 Ω with a connection of R_{feed2}= 0.6 mm. Besides, the distance between via fed of single antennas along the x and y directions (i.e., d_x and d_y) are 16 mm and 18 mm, respectively, when a 0.76 mm Taconic-TSM height substrate has been considered. Figure 2 shows the S_{11} and gain performance that has minimum and maximum values of 11.9 dB and 17.9 dB in the bandwidth. Figure 3 shows the radiation patterns in the E- and H- planes at different frequencies within the considered band.

The variation of the radiation pattern within the considered frequency band is due to the change of the phase of the feeding voltage of different elements attributable to the presence of the beam-forming network (BFN). The optimization regards the input impedance only; incorporation of the BFN in the overall optimization process is under consideration.

IV. Conclusion

This paper presents the design methodology for designing and optimizing antenna array by using BUO and BO methods, sequentially. Providing both the optimal number of single antennas and also the feeding configuration is not straightforward and it is a challenging task. To tackle this problem, antenna array design starts with 1×2 or 2×1 configuration. Then BUO method is applied to increase the number of single antennas and the BO method is employed for sizing the feeding circuit. The proposed method is proved by designing and optimizing an antenna array at Ku frequency band.

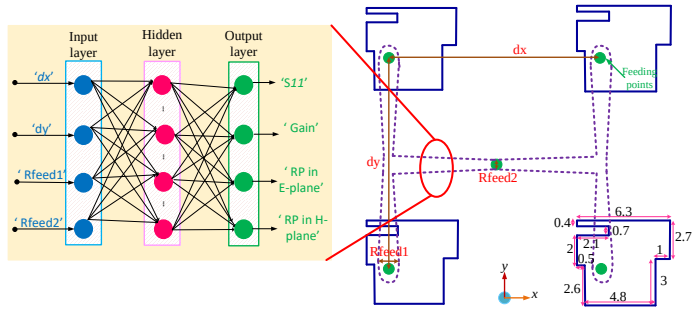

Fig. 1. Optimized antenna array where the feeding network is optimized using the proposed ANN (width and length are in mm; drawing not in scale).

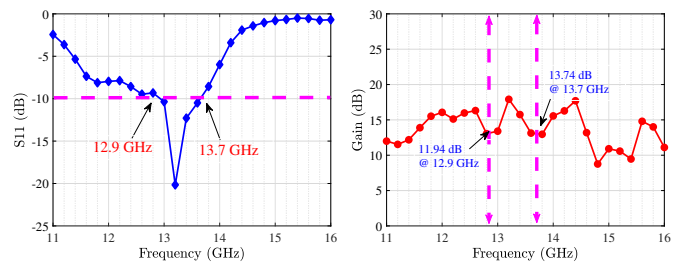

Fig. 2. Input scattering parameter S_{11} (left) and gain performance (right) of the optimized antenna.

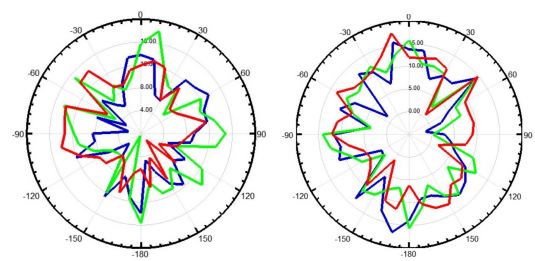

Fig. 3. Radiation pattern of the considered antenna in the E- (left) and H- (right) at 12.9 GHz (red), 13.4 GHz (green), and 13.7 GHz (blue).

References

[1] J. Tak, A. Kantemur, Y. Sharma, and H. Xin, "A 3-D-Printed W-Band Slotted Waveguide Array Antenna Optimized Using Machine Learning," *IEEE Antennas and Wireless Propag. Let.*, vol. 17, pp. 2008–2012, 2018.

[2] M. Yang, et al., "Machine-learning-based fast angle-of-arrival recognition for vehicular communications," *IEEE Trans. on Vehicular Technology*, vol. 70, no. 2, pp. 1592–1605, 2021.

[3] H. Liu, S. Lu, M. El-Hajjar, and L.-L. Yang, "Machine learning assisted adaptive index modulation for mmwave communications," *IEEE Open Journal of the Communications Society*, vol. 1, pp. 1425–1441, 2020.

[4] A. M. Alzahed, S. M. Mikki, and Y. M. M. Antar, "Nonlinear mutual coupling compensation operator design using a novel electromagnetic machine learning paradigm," *IEEE Antennas and Wireless Propag. Let.*, vol. 18, no. 5, pp. 861–865, 2019.

[5] F. Mir, L. Matekovits, L. Kouhalvandi, and E. O. Gunes, "Optimization for Wideband Linear Array Antenna through Bottom-Up Method," in *2020 IEEE International Conference on Electrical Engineering and Photonics (EExPolytech)*, 2020, pp. 51–54.

[6] F. Mir, L. Kouhalvandi, L. Matekovits, and E. O. Gunes, "Automated optimization for broadband flat-gain antenna designs with artificial neural network," *IET Microwaves, Antennas and Propag. (in press)*, vol. 10.1049/mia2.12137, 2021.