POLITECNICO DI TORINO
Repository ISTITUZIONALE

Softwarized and Autonomous Management of Photonic Switching Systems Using Machine Learning

Original
Softwarized and Autonomous Management of Photonic Switching Systems Using Machine Learning / Khan, Ihtesham; Masood, MUHAMMAD UMAR; Tunesi, Lorenzo; Ghillino, Enrico; Bardella, Paolo; Carena, Andrea; Curri, Vittorio. - ELETTRONICO. - (2021). (Intervento presentato al convegno 2021 International Conference on Optical Network Design and Modeling (ONDM) tenutosi a Gothenburg, Sweden nel June 28 - July 1, 2021).

Availability:
This version is available at: 11583/2917844 since: 2021-08-15T15:03:13Z

Publisher:
IFIP

Published
DOI:

Terms of use:

This article is made available under terms and conditions as specified in the corresponding bibliographic description in the repository

Publisher copyright

(Article begins on next page)

12 October 2024

Softwarized and Autonomous Management of Photonic Switching Systems Using Machine Learning

Ihtesham Khan
DET, Politecnico di Torino, Italy
ihtesham.khan@polito.it

M Umar Masood
DET, Politecnico di Torino, Italy
muhammad.masood@polito.it

Lorenzo Tunesi
DET, Politecnico di Torino, Italy
tunesi.lorenzo@gmail.com

Enrico Ghillino
Synopsys, Inc., 400,United States.
enrico.ghillino@synopsys.com

Paolo Bardella
DET, Politecnico di Torino, Italy
paolo.bardella@polito.it

Andrea Carena
DET, Politecnico di Torino, Italy
andrea.carena@polito.it

Vittorio Curri
DET, Politecnico di Torino, Italy
curri@polito.it

***Abstract*—We propose a machine learning-based approach for the management of photonic switching systems in a software-defined network context. This work aims to describe a softwarized system that is both topological and technological agnostic and can be employed in real-time.**

***Index Terms*—Machine Learning, Optical Switches, Photonic Integrated Circuits, Software-defined-networking.**

I. Introduction

The ever increasing demand for global internet traffic and evolving concepts of connectivity call for flexible network components that can better handle the complexities, power consumptions, and costs of optical networks. In this scenario, Software-defined networking (SDN) becomes an essential paradigm for managing photonic switching systems. Photonic integrated circuits (PICs), due to their low energy consumption, lower latency and small foot-print, are a promising technology for the next generation of photonic switches. They will be widely adopted, particularly in data centers and core optical networks where high-speed data exchange is a fundamental functionality.

PIC based reconfigurable optical switches rely on the principle that the flow of light can be manoeuvred by electrically controlled elements, like Mach-Zehnder (MZ) interferometers [1] or optical micro ring resonators (MRRs) [2]. A generic $N \times N$ photonic switch can be fabricated by combining multiple switching elements in different topologies, where N input signals at different wavelengths (λ_1, λ_2, λ_3....λ_n) are routed to any N output port with different wavelength combination (for example, λ_2, λ_3, λ_1....λ_n) using M control signals (see Fig. 1), depending on the selected topology.

The scalability of any $N \times N$ photonic switch is crucial for the next generation core and data center optical networks. The essential requirement for the scaling of $N \times N$ photonic switches is to calibrate the internal control/routing states efficiently. The routing states' precise calibration is necessary to obtain the desired wavelength permutation for such a complex integrated switching fabric. The present literature includes several proposals for techniques and algorithms for controlling the internal routing states of photonic switches. Almost all of these algorithms are specifically designed for the internal topology of the network [3], [4], leaving no generalized topology-independent method for routing and global performance optimization.

Thus, no general algorithms have yet been proposed. In contrast with topology-dependent strategies, we propose an original data-driven approach based on Machine Learning (ML) to predict photonic integrated switches' control/routing states. The proposed approach is adopted in the context of optical SDN. The optical SDN implementation demands network element's abstraction at each layer to empower complete control by the centralized network controller. This concept leads to the introduction of a softwarized and autonomous model for the control of any PIC based optical switching system depicted in Fig. 2. Typically, optical switching systems are responsible for addressing wavelengths from a given input optical line system (OLS) to a given output OLS. For network abstraction, optical switches define the spectral load at each OLS input, so their software abstraction must properly propagate signal information, including previously accumulated metrics. Moving towards the abstraction and softwarization of $N \times N$ optical switches, at control plane level, the request for any particular configuration of output wavelengths (λ_1, λ_2, λ_3....λ_n) is received related to arbitrary switch with unknown topology. The ML application program interface (API) receives the desired configuration of output signals that are sent by the control plane and subsequently must provides the M control signals respectively. The given topology-agnostic ML API provides the control signals for any $N \times N$ photonic switch with a completely arbitrary and potentially unknown topology.

The proposed ML based method operates with a black-box approach, as it only needs a sufficiently large amount of training instances to build a cognitive model of the switch without requiring insights into the internal component topology. The

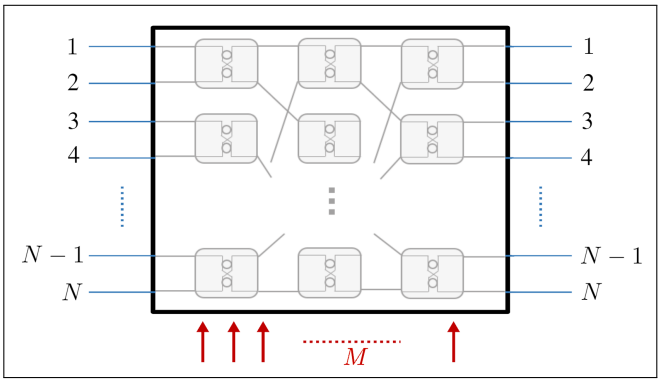

Fig. 1: Generic $N \times N$ optical switch fabric.

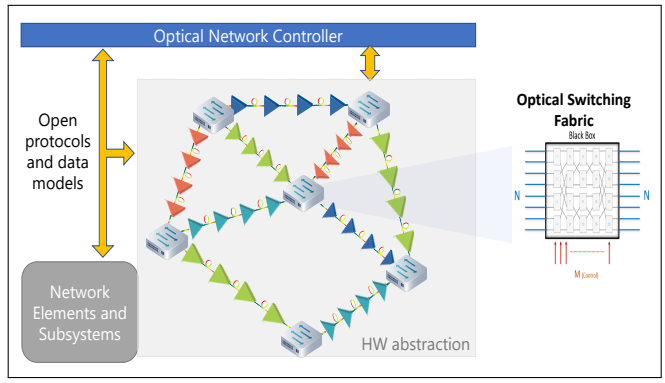

Fig. 2: Software-defined Open optical networks

proposed method is tested by considering a switch topology of $N \times N$ Beneš network [5]–[7], for which a synthetic dataset for ML training and testing has been obtained. To validate the proposed approach's scalability, we considered three different size of Beneš switch, i.e., $N = 8, 10, 15$. The proposed ML modules exploit a different combination of wavelengths as features at the output ports, and as labels, it uses M control signals. We propose a simple heuristic developed by observing wrong predicted M configurations further to enhance the proposed ML-based approach's prediction ability. This heuristic assists the ML module by improving the prediction accuracy.

TABLE I: Dataset Statistics

Network type **Size** ($N \times N$)	**Beneš 8x8**	**Beneš 10x10**	**Beneš 15x15**
Permutations ($N!$)	40,320	3,628,800	$1{,}307 \times 10^9$
Switches (M)	20	26	49
Combinations (2^M)	1,048,576	67,108,864	562×10^{12}
Dataset	100,000	300,000	1,000,000
Neurons per hidden layer	15	35	35
Training time (hours)	10	37	177

II. Machine Learning & Dataset Generation Analysis

The proposed study presents data-driven ML agents' use to predict the control/routing states of the photonic integrated switch. In the proposed scenario, the ML agent is trained in a complete agnostic way, given a $N \times N$ photonic switch with any arbitrary topology. The proposed ML based technique works with a black-box approach as the ML based model only needs a large number of training instances to train the model without considering the component internal architecture. The proposed ML model, explicitly a deep neural network (DNN), is developed by using the TensorFlow© platform: it incorporates three hidden-layers with a different number of cognitive neurons for each hidden layer (see Tab. I), having *ReLU* as the activation function.

The proposed DNN model is evaluated by mean square error (MSE) as loss function. The DNN model is configured for training-steps of 1,000 and learning-rate of 0.01. The train set for each size N of the considered Beneš topology consists of 70% of the dataset, while the test set consists of 30% of

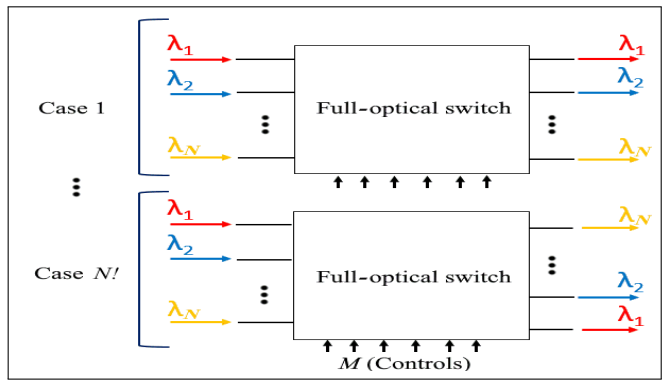

Fig. 3: Example of full optical switch

dataset as reported in Tab. I. In the proposed ML agent, we use as features the different combinations of wavelengths at the output ports and as labels the values of the M control signals.

The first step in the ML analysis has been the generation of a synthetic dataset based on the internal modeling of the considered switch topology. Different kinds of topological solutions can be considered [8], as the proposed method work in unspecified black-box scenarios with respect to internal switching topology. The most considered topological configuration is the Beneš network (a Clos network with 2×2 switches, $M = N \log_2 N - \frac{N}{2}$) and arbitrary-sized Beneš, where N is not constrained to be a power of 2. Beneš solutions are particularly suitable for the PICs integration due to the less number of switches required [9]. For all types of non-blocking switching networks, the M control signals variation allows a total combination of 2^M different internal configurations, whereas $N!$ distinct permutations of the N input signals are possible, as shown in Fig. 3. To generate the ML training and testing dataset against the considered $N \times N$ Beneš network, a subset of the total 2^M control combinations is used. To further demonstrate the proposed approach's scalability, three datasets are generated considering different Beneš sizes: $N = 8, 10, 15$; corresponding to configurations with $M = 20, 26, 49$ internal switches, respectively, reported in Tab. I.

The proposed ML model is simulated in a parallel way for

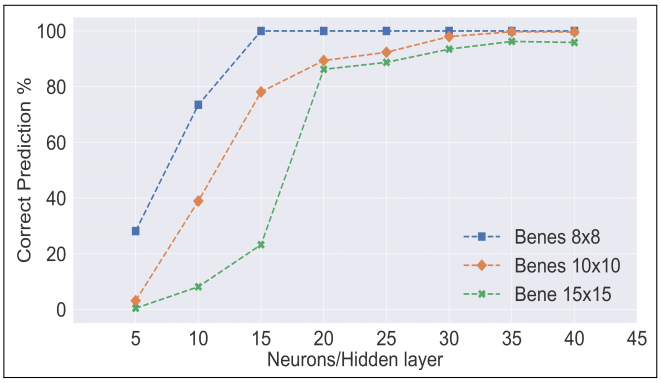

Fig. 4: Correct prediction vs. hidden layer size

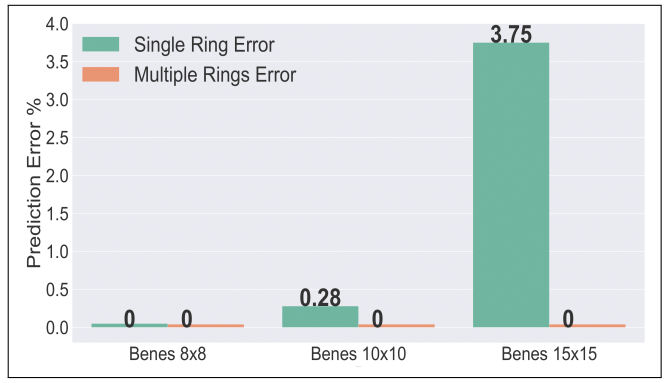

Fig. 5: Errors in rings or control signals

each M of the considered architecture using a workstation having specifications, 32 GB of 2133 MHz RAM and an Intel® Core™ i7 6700 3.4 GHz CPU. The training time for each considered architecture is based on the number of M and is reported in Tab. I.

III. Results and Conclusion

In this section, we report the results achieved for each considered Beneš size to predict control states. The reliability of the prediction with respect to the number of hidden layer size is shown for all three considered Beneš sizes in Fig. 4. As expected, the trend shows that the ML model's prediction ability improves by increasing the hidden layer size, although with diminishing returns.

Fig. 5 shows the percentage of cases with a given number of errors in the control sequence for all three different Beneš sizes. The results in Fig. 5 shows that for each size of Beneš, the prediction of ML contains only single-ring errors, i.e., one control signal is predicted wrong in all the realization of incorrect routing. Finally, the statistics of correct prediction using ML are summarized for all three considered Beneš sizes by the orange bars in Fig. 6. We observe an excellent level of accuracy but with a decreasing trend of prediction ability when increasing Beneš size N: correct predictions reach 100%, 99.72% and 96.25% for N equal to 8, 10 and 15, respectively. To further enhance the reliability of the ML approach, we proposed an additional module based on a simple heuristic that we derived from the data shown in Fig. 5.

For the Beneš sizes we considered, all incorrect routing cases contain a single switch with error. The heuristic we propose is to try the correction of single-ring errors by flipping one switch and comparing the output sequence of wavelengths against the desired output simultaneously. This approach requires only M attempts, and this number is reasonably small so that we can consider it also practical for real-time implementations. For Beneš 8×8, 10×10 and 15×15, using the ML assisted by heuristic, the accuracy improves to 100% for all the cases.

In conclusion, we have demonstrated that an ML approach can effectively determine control states for a generic $N \times N$ photonic switch without any knowledge required of the topology. The ML is scalable to large N as we show a high accuracy with a limited dataset size. Moreover, we have been able to show that a simple heuristic approach can increase the prediction accuracy to 100% at the cost of very little computational time/resources for N up to N=15.

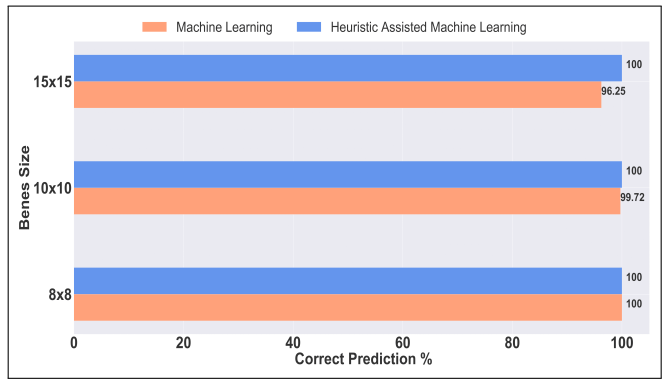

Fig. 6: Prediction with ML and heuristic assisted ML

References

[1] K. Suzuki et al, "Low-insertion-loss and power-efficient 32× 32 silicon photonics switch with extremely high-δ silica PLC connector," JLT **37**, 116–122 (2019).

[2] Q. Cheng et al., "Ultralow-crosstalk, strictly non-blocking microring-based optical switch," Photonics Research **7**, 155–161 (2019).

[3] M. Ding et al., "Routing algorithm to optimize loss and IPDR for rearrangeably non-blocking integrated optical switches," in *CLEO: Applications and Technology,* (OSA, 2015), pp. JTh2A–60.

[4] Y. Qian et al., "Crosstalk optimization in low extinction-ratio switch fabrics," in *OSA,* (Optical Society of America, 2014), pp. Th1I–4.

[5] E. Ghillino et al., "Assessing the impact of design options for an optical switch in network routing impairments," in *2019 21st ICTON,* (IEEE, 2019), pp. 1–4.

[6] I. Khan et al., "Machine learning assisted abstraction of photonic integrated circuits in fully disaggregated transparent optical networks," in *2020 22nd ICTON,* (2020), pp. 1–4.

[7] I. Khan et al., "Effectiveness of machine learning in assessing QoT impairments of photonics integrated circuits to reduce system margin," in *2020 IPC,* (2020), pp. 1–2.

[8] S. Arora et al., "On-line algorithms for path selection in a nonblocking network," in *ACM symposium,* (1990), pp. 149–158.

[9] Q. Cheng et al., "Silicon photonic switch topologies and routing strategies for disaggregated data centers," IEEE JSTQE **26**, 1–10 (2020).