POLITECNICO DI TORINO
Repository ISTITUZIONALE

Further applications of continued fractions to series-parallel circuits

Original
Further applications of continued fractions to series-parallel circuits / Perano, ENRICO FAUSTO. - In: APPLIED MATHEMATICAL SCIENCES. - ISSN 1314-7552. - ELETTRONICO. - 14:15(2020), pp. 717-724. [10.12988/ams.2020.914262]

Availability:
This version is available at: 11583/2849227 since: 2020-10-26T13:24:08Z

Publisher:
Hikari LtD

Published
DOI:10.12988/ams.2020.914262

Terms of use:

This article is made available under terms and conditions as specified in the corresponding bibliographic description in the repository

Publisher copyright

(Article begins on next page)

12 October 2024

Applied Mathematical Sciences, Vol. 14, 2020, no. 15, 717 - 724
HIKARI Ltd, www.m-hikari.com
https://doi.org/10.12988/ams.2020.914262

Further Applications of Continued Fractions to Series-Parallel Circuits

Enrico Perano

Polytechnic of Turin, Italy

This article is distributed under the Creative Commons by-nc-nd Attribution License. Copyright © 2020 Hikari Ltd.

Abstract

The equivalent resistance of any series-parallel circuit can be expressed and calculated as a continued fraction obtained dividing two determinants of a tridiagonal square matrix, called continuants. The author illustrates that the calculation of the voltages or currents using the divider formulas can also be developed as fractions of continuants. Furthermore a Matlab code which calculate continuants and continued fractions is listed.

Mathematics Subject Classification: 94C15, 94C05, 90C35, 05C90

Keywords: Series-Parallel Circuits, Matlab Codes, Continuants

1 Introduction

Continued fractions have always aroused considerable interest ([1] , [2] , [3]), not only in Mathematics sphere, but also, and above all, in its application within other scientific disciplines. For example, in circuit theory, numerous texts or papers report the calculation of the equivalent resistance, or more generically impedance, of a ladder network expressing it as a continued fraction ([4],[5], [6]). On the other hand, any rational number can be expressed as a finite continued fraction, so it is possible to combine a set of equal resistances of integer value R, in order to obtain an equivalent resistance which is a fraction of R, $\frac{p}{q}R\,(p, q \in \mathbf{R})$ ([4], [6]).
Infinite continued fractions also find applications in electric circuits, for example in the calculation of the equivalent resistance of a ladder network of unitary

resistances ([4]), which yields the golden section, whereas its partial continued fractions can be calculated as the ratio of two consecutive Fibonacci numbers ([4],[2]).

2 Preliminary Notes

As known, the overall resistance of the series of n resistors is obtained by adding the single resistances, while that of n resistors connected in parallel is equal to the reciprocal of the sum of the reciprocals.

Definition 2.1 *A circuit with n nodes and q branches, which contains only resistors, is defined series-parallel, if and only if, the equivalent resistance between each pair of nodes can be obtained by applying only the two rules mentioned above.*

Let us consider the following configuration of a series-parallel circuit, called **ladder network**:

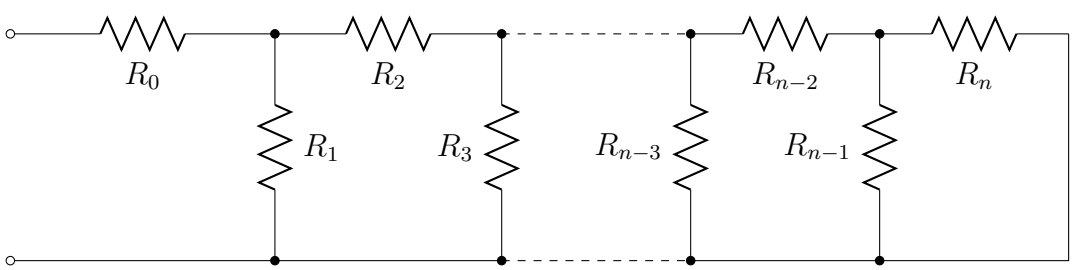

The equivalent resistance of this bipole, R_{eq}, can be expressed, and therefore calculated, as the continued fraction:

$$R_{eq} = R_0 + \cfrac{1}{\cfrac{1}{R_1} + \cfrac{1}{R_2 + \cfrac{1}{\cfrac{1}{R_3} + \cfrac{1}{R_4 + \dots}}}} \tag{1}$$

which is briefly summarized in the following notation:

$$\left[R_0; \frac{1}{R_1}, R_2, \frac{1}{R_3}, R_4, \dots, 0, \frac{1}{R_{n-1}}, R_n\right]$$

As a generic resistance R_i can assume any real positive or null value R_i, or

$+\infty$, the previous form (1) can also be used to represent k resistors in series, letting $R_1 = R_3 = \cdots = R_{n-1} = \infty\,(n = 2k-2)$:

$$R_{eq} = R_0 + \cfrac{1}{0 + \cfrac{1}{R_2 + \cfrac{1}{0 + \cfrac{1}{R_4 + \dots}}}} = [R_0; 0, R_2, 0, \dots, R_n] = R_0 + R_2 + \dots R_n$$

Similarly, for the configuration of k resistors in parallel, if we let $R_0 = R_2 = \cdots = R_{n-2} = 0\,(n = 2k-1)$, the continued fraction becomes:

$$R_{eq} = 0 + \cfrac{1}{\cfrac{1}{R_1} + \cfrac{1}{0 + \cfrac{1}{\cfrac{1}{R_3} + \cfrac{1}{0 + \cfrac{1}{\cfrac{1}{R_5} + \dots}}}}} =$$

$$\left[0; \frac{1}{R_1}, 0, \frac{1}{R_3}, 0, \dots, 0, \frac{1}{R_n}\right] = \frac{1}{\left[\frac{1}{R_1}; 0, \frac{1}{R_3}, 0, \dots, 0, \frac{1}{R_n}\right]} = \frac{1}{\frac{1}{R_1} + \frac{1}{R_3} \cdots \frac{1}{R_n}}$$

Definition 2.2 *A ladder network is defined composed when one or more of its resistors is still a ladder circuit*

Any series-parallel circuit , according to the definition 2.1, is a composed ladder network, so its equivalent resistance is a nesting of continued fractions. It can be reduced to a simple ladder network whose resistors are equivalent resistances of other ladder networks.
An example of a composed ladder network is below:

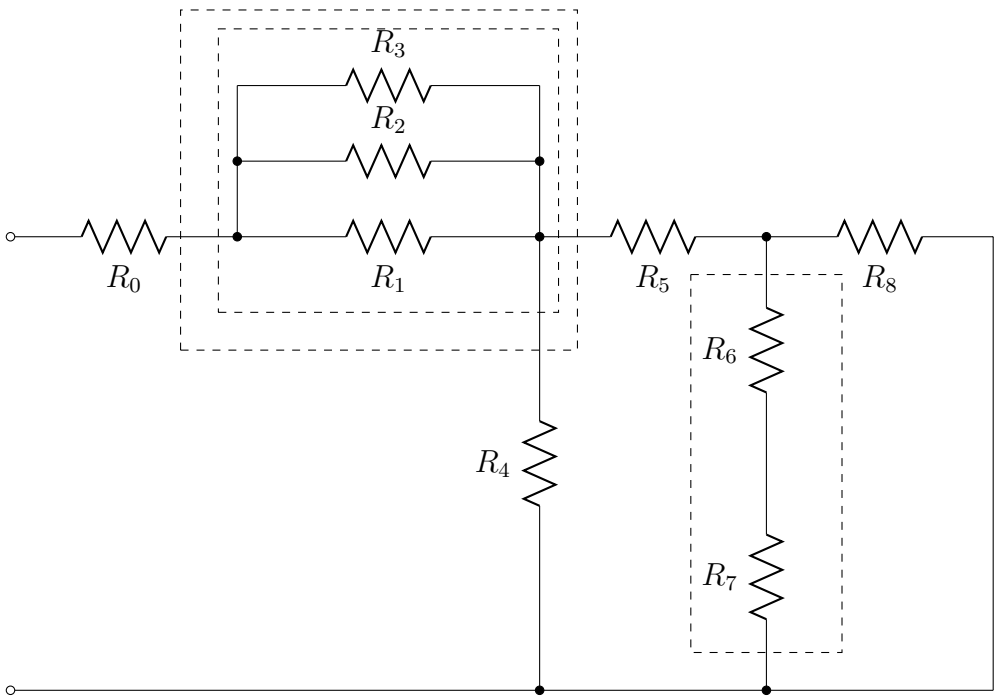

it is possible to let:

$$R_A = \left[0; \frac{1}{R_1}, 0, \frac{1}{R_2}, 0, \frac{1}{R_3}\right], \quad R_B = [R_0; 0, R_A], \quad R_C = [R_6; 0, R_7]$$

obtaining a simple ladder network, having the following equivalent resistance:

$$\left[R_B; \frac{1}{R_4}, R_5, \frac{1}{R_C}, R_8\right] =$$
$$\left[\left[R_0; 0, \left[0; \frac{1}{R_1}, 0, \frac{1}{R_2}, 0, \frac{1}{R_3}\right]\right]; \frac{1}{R_4}, R_5, [0; [R_6; 0, R_7]], R_8\right]$$

which can be further simplified to reduce:

$$\left[\left[R_0; \frac{1}{R_1}, 0, \frac{1}{R_2}, 0, \frac{1}{R_3}\right]; \frac{1}{R_4}, R_5, \frac{1}{R_8}, R_6, 0, R_7\right]$$

3 The Resolution of a Series-Parallel Circuit using the Continuants

According to the Euler rule, any finit continued fraction of order n, defined convergent, can be written as the ratio of two polynomials:

$$[a_0; a_1, a_2, \ldots, a_n] = \frac{p_n}{q_n} = \frac{P(a_0, a_1, a_2, \ldots, a_n)}{P(a_1, a_2, \ldots, a_n} \tag{2}$$

called **continuants**, which are the determinants of this tridiagonal square matrix ([7],[8]):

$$P(a_0, a_1, a_2, \ldots, , a_n) = \begin{vmatrix} a_0 & +1 & 0 & 0 & \ldots & 0 \\ -1 & a_1 & +1 & 0 & \ddots & \vdots \\ 0 & -1 & a_2 & \ddots & \ddots & \vdots \\ \vdots & \ddots & \ddots & \ddots & \ddots & \vdots \\ 0 & \ldots & 0 & -1 & a_{n-1} & +1 \\ 0 & \ldots & 0 & 0 & -1 & a_n \end{vmatrix} \tag{3}$$

obtained by means of the following recursive formula:

$$P(a_0, a_1, a_2, \ldots, a_n) = a_0 \cdot P(a_1, a_2, \ldots, a_n) + P(a_2, \ldots, a_n) \tag{4}$$

Therefore it is possible to associate a tridiagonal square matrix with any series-parallel circuit and calculate its equivalent resistance by (2).
The Matlab code(see last paragraph) yields the continued fraction and the continuants by inputting both numerical and symbolic values on the basis of (2) and (3).
For example, the continuants of the series of three resistors are:

$$p_3 = P(R_0, 0, R_1, 0, R_2) = \begin{vmatrix} R_0 & +1 & 0 & 0 & 0 \\ -1 & 0 & +1 & 0 & 0 \\ 0 & -1 & R_1 & +1 & 0 \\ 0 & 0 & -1 & 0 & +1 \\ 0 & 0 & 0 & -1 & R_2 \end{vmatrix} = R_0 + R_1 + R_2$$

$$q_3 = P(0, R_1, 0, R_2) = \begin{vmatrix} 0 & +1 & 0 & 0 \\ -1 & R_1 & +1 & 0 \\ 0 & -1 & 0 & +1 \\ 0 & 0 & -1 & R_2 \end{vmatrix} = 1$$

The equivalent resistance must therefore be: $R_{eq} = R_0 + R_1 + R_2$.
Similarly, for the parallel of three resistors, we have:

$$p_3 = P(0, \frac{1}{R_0}, 0, \frac{1}{R_1}, 0, \frac{1}{R_2}) = \begin{vmatrix} 0 & 1 & 0 & 0 & 0 & 0 \\ -1 & \frac{1}{R_0} & +1 & 0 & 0 & 0 \\ 0 & -1 & 0 & +1 & 0 & 0 \\ 0 & 0 & -1 & \frac{1}{R_1} & +1 & 0 \\ 0 & 0 & 0 & -1 & 0 & +1 \\ 0 & 0 & 0 & 0 & -1 & \frac{1}{R_2} \end{vmatrix} = 1$$

$$q_3 = P(\frac{1}{R_0}, 0, \frac{1}{R_1}, 0, \frac{1}{R_2}) = \begin{vmatrix} \frac{1}{R_0} & +1 & 0 & 0 & 0 \\ -1 & 0 & +1 & 0 & 0 \\ 0 & -1 & \frac{1}{R_1} & +1 & 0 \\ 0 & 0 & -1 & 0 & +1 \\ 0 & 0 & 0 & -1 & \frac{1}{R_2} \end{vmatrix} = \frac{1}{R_0} + \frac{1}{R_1} + \frac{1}{R_2}$$

$$R_{eq} = \frac{1}{\frac{1}{R_0} + \frac{1}{R_1} + \frac{1}{R_2}}$$

4 Voltage and Current Divider using Continued Fractions

In a series-parallel circuit containing a single voltage or current generator, the formulas of the dividers which supply the voltage between two nodes or the current in a branch, can be expressed as fractions of continuants.
To avoid a nesting of continuants, the circuit has to be reduced previously to a simple ladder network where the voltage or current to be calculated refers to the last resistor.
Consider for example the following simple ladder network:

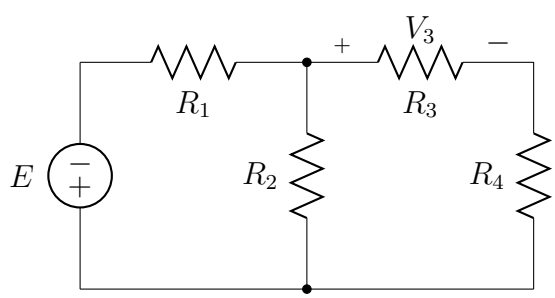

The formula which yields the voltage V_3 can be written as follows:

$$V_3 = E \cdot \frac{[R_3]}{[R_3; 0, R_4]} \cdot \frac{\left[0; \frac{1}{R_2}, R_3, 0, R_4\right]}{\left[R_1; \frac{1}{R_2}, R_3, 0, R_4\right]} = E \cdot \frac{P\left(R_3\right)}{P\left(R_3, 0, R_4\right)} \cdot \frac{P\left(0, \frac{1}{R_2}, R_3, 0, R_4\right)}{P\left(R_1, \frac{1}{R_2}, R_3, 0, R_4\right)}$$

where:

$$P\left(R_3\right) = R_3, \quad P\left(R_3, 0, R_4\right) = R_3 + R_4$$

$$P\left(0,\frac{1}{R_2},R_3,0,R_4\right)=\begin{vmatrix} 0 & +1 & 0 & 0 & 0 \\ -1 & \frac{1}{R_2} & +1 & 0 & 0 \\ 0 & -1 & R_3 & +1 & 0 \\ 0 & 0 & -1 & 0 & +1 \\ 0 & 0 & 0 & -1 & R_4 \end{vmatrix}=R_3+R_4$$

$$P\left(R_1,\frac{1}{R_2},R_3,0,R_4\right)=\begin{vmatrix} R_1 & +1 & 0 & 0 & 0 \\ -1 & \frac{1}{R_2} & +1 & 0 & 0 \\ 0 & -1 & R_3 & +1 & 0 \\ 0 & 0 & -1 & 0 & +1 \\ 0 & 0 & 0 & -1 & R_4 \end{vmatrix}=\frac{R_1\left(R_3+R_4\right)+R_2\left(R_1+R_3+R_4\right)}{R_2}$$

Similarly, the method can be applied to the current divider with appropriate measures. Given the equivalent conductance of a ladder network:

$$\left[0,\frac{1}{G_0},G_1,\frac{1}{G_2},\ldots,\frac{1}{G_n}\right]$$

we must also use the following two properties of continued fractions:

$$[0;a_1,a_2,\ldots,a_n]=\frac{1}{[a_1;a_2,\ldots,a_n]};\quad P\left(0,a_1,a_2\ldots,a_n\right)=P\left(a_2\ldots,a_n\right)$$

5 Matlab Code

```
function Res_eq_sim1(v)
%Continuant and continued fraction of a numeric or
%symbolic vector
N=length(v);
display('Eulero Matrix');
A=(diag(v))+diag((-1).*ones(N-1,1),-1)+diag((+1).*ones(N-1,1),+1)
[continuant_v]=det(A)
[Num_Req]=det(A)
b=v(2:N);
B=(diag(b))+diag((-1).*ones(N-2,1),-1)+diag((+1).*ones(N-2,1),+1);
[Den_Req]=det(B)
[R_eq]=Num_Req/Den_Req
end
```

References

[1] G. Chrystal M.A., L.L.D., *Algebra Elementary Text Book, Part II*, Chap. 34, 1889.

[2] W.B. Jones and W.J. Thron, *Continued Fractions - Analytic Theory and Applications*, Encyclopedia of Mathematics, Vol. 11, Addison-Wesley, 1984. https://doi.org/10.1017/cbo9780511759550

[3] *Notes of a course in continued fractions*, supervised by Cor Kraaikamp and Wieb Bosma, Department of Mathematics, Radboud Universiteit Nijmegen, the Netherlands (2012-2013).

[4] Yukinao Isokawa, Series-Parallel Circuits and Continued Fractions, *Applied Mathematical Sciences*, **10** (27) (2016), 1321 - 1331. https://doi.org/10.12988/ams.2016.63103

[5] R.J. Duffin, Topology of series-parallel networks, *Journal of Mathematical Analysis and Applications*, **10** (1965), 303-318. https://doi.org/10.1016/0022-247x(65)90125-3

[6] *An application of continued fractions to composite electrical resistor design*, https://seriouscephalopod.wordpress.com (2016).

[7] Thomas Muir, *A treatise on the theory of determinants*, Dover Publications (1960), pp. 516525.

[8] Jiri Jina, Pavel Trojovsky, On determinants of some tridiagonal matrices connected with Fibonacci Numbers, *International Journal of Pure and Applied Mathematics*, **88** (4) (2013), 569-575. https://doi.org/10.12732/ijpam.v88i4.11

Received: August 14, 2020; Published: September 3, 2020