POLITECNICO DI TORINO
Repository ISTITUZIONALE

Phantom power generator for DC railway metrology

Original
Phantom power generator for DC railway metrology / Signorino, D.; Crotti, G.; Femine, A. D.; Gallo, D.; Giordano, D.; Landi, C.; Luiso, M.. - 2019-:(2019), pp. 1-5. (Intervento presentato al convegno 2019 IEEE International Instrumentation and Measurement Technology Conference, I2MTC 2019 tenutosi a nzl nel 2019) [10.1109/I2MTC.2019.8826995].

Availability:
This version is available at: 11583/2850461 since: 2021-01-14T14:23:48Z

Publisher:
IEEE

Published
DOI:10.1109/I2MTC.2019.8826995

Terms of use:

This article is made available under terms and conditions as specified in the corresponding bibliographic description in the repository

Publisher copyright
IEEE postprint/Author's Accepted Manuscript

©2019 IEEE. Personal use of this material is permitted. Permission from IEEE must be obtained for all other uses, in any current or future media, including reprinting/republishing this material for advertising or promotional purposes, creating new collecting works, for resale or lists, or reuse of any copyrighted component of this work in other works.

(Article begins on next page)

27 April 2024

Phantom Power Generator for DC Railway Metrology

D. Signorino[1,2], *Student Member IEEE,* G. Crotti[2], A. Delle Femine[3], *Member, IEEE*, D. Gallo[3], *Member, IEEE*, D. Giordano[2],C. Landi[3], *Senior Member IEEE*, M. Luiso[3], *Member, IEEE*

[1]Politecnico di Torino, Torino, Italy

[2]Istituto Nazionale di Ricerca Metrologica (INRIM), Torino, Italy
{d. signorino, g.crotti, d.giordano}@inrim.it

[3]University of Campania "Luigi Vanvitelli", Aversa (CE), Italy
{antonio.dellefemine; daniele.gallo; carmine.landi; mario.luiso}@unicampania.it)

Abstract — **To establish a single European railway area, the European Commission requires, by 2019, that energy billings shall be computed on the actual energy consumed. So, in the near future, as required by EN 50463-2, all the trains shall be equipped with an Energy Measurement Function (EMF), whose measurement accuracy should be assessed and periodically re-verified. To answer to this emerging need, this paper presents a calibration system allowing the accurate testing of EMFs in DC conditions, up to 10 kV and 300 A, with arbitrary superimposed spectral component up to 10 kHz. It is able to reproduce all the tests prescribed by EN 504632, but, in order to characterize the EMF in actual operating conditions, also a number of possible synthetic complex waveforms and test signals acquired on board trains can be reproduced. Some testing results of an EMF, which uses voltage and current transducers typically installed in Italian electro-trains, are presented.**

Keywords: DC railway system, power and energy measurement, voltage and current transducer, stationary and dynamic metrological characterization

I. Introduction

In recent years, the implementation of efficient, reliable and environmentally friendly transport systems becomes imperative not only to comply with the international agreements on reducing greenhouse gas emissions ([1]-[4]), but also to guarantee liveable conditions in urban areas. Furthermore, in a very competitive context where other transportation modes are considerably improving their environmental performance and the energy costs are steadily increasing, it is crucial that railway transport reduces its energy use while maintaining or enhancing its service quality and capacity, [5], [6].

Recent European directives [8], [9] that regulate the railway networks in European Union (EU), will allow the free circulation of trains between Countries. In order to establish a single European railway area, the European commission requires, by 2019, that the energy billings shall be computed on the actual energy consumed [7]. A continuous power/energy metering would allow the passage from conventional billing, distance based flat rate, to effective consumption for traction energy.

Moreover, the electric grid of the railway system always works in a non-stationary regime and it is strongly characterized by events like the presence of harmonic, electric arcs, sag, swell and so on. To this end, an accurate and reliable knowledge of the energy absorbed/exchanged between the train and the railway grid, that takes into consideration the harsh on board measurement conditions and the frequent non stationary electrical conditions, is essential [2], [5]. For this reason, all trains shall be equipped with an EMF, whose measurement accuracy shall be assessed and periodically re-verified, as required by EN 50463-2 [7]. To assess the metrological reliability of the EMF under real operating conditions, calibration set ups and procedures which go beyond the well-known procedures developed for pure sinusoidal or continuous regimes are required [10]-[27].

For energy measurements on-board trains, the in force European standard EN 50463-2 adopts the same requirements given for fixed 50 Hz installation, so disregarding wideband effects specific for railway systems. With respect to active and reactive energy, no information is given on the data processing algorithm adopted in the energy measuring system. In particular, different definitions for the reactive energy can give different results (deviations up to 120 % [28]). The work presented in this paper is inserted in the context of the European project EMPIR 16ENG04 MyRailS [29], which intend to develop the metrological framework for the accurate evaluation of the energies and powers exchanged in DC and AC railway systems, including future updates of the standard.

Therefore, a reference phantom power generation system, up to 10 kV and 300 A and from DC to 10 kHz, is presented. It is able to reproduce all the tests prescribed by EN 50463¬2, but, in order to characterize the EMF in actual operating conditions, also a number of possible synthetic complex waveforms and even test signals acquired on board trains can be reproduced.

Some reference systems for generation of phantom power have been presented in literature, like [30], [31]. Although they are very accurate and they can reach high values for the generated voltages and currents, they work only at power frequency. Therefore, at the best of the author's knowledge, the presented reference system for generation of phantom power has unique features.

The paper is organized as follows. Section II show a brief review of the actual standard framework about voltage and current transducers for railway systems. Section III is focused on the calibration setup: hardware and software features are

discussed. Section IV presents the analytical formulation of the reference power. Section V explains the metrological characterization and the systematic error compensation technique. Section VI shows the preliminary results of the testing of a virtual EMF, that is a PC based data acquisition system which calculates the power from the samples of a voltage and a current transducer which are currently installed on-board Italian trains. Finally, Section VII draws the conclusions.

II. Review of Standard Framework

The standard 50463-2 [7], which is focused on energy measuring on-board trains, prescribes that all trains shall be equipped with an EMF, whose measurement accuracy shall be assessed and periodically re-verified.

To this end, some accuracy tests are defined for devices devoted to the measurement of the consumed and regenerated active energy of a traction unit. A generic energy measurement system is schematically considered made up of the following functions, which can be contained in one or more devices: Voltage Measurement Function (VMF); Current Measurement Function (CMF); Energy Calculation Function (ECF). In this document, the terms Measurement Function is used as a general term and encompasses the voltage sensor and current sensor that are considered devices implementing measurement functions. For each of these functions, accuracy classes are specified and associated reference conditions are defined. To prove compliance with accuracy class, some basic accuracy tests shall be made for VMF and for CMF. In both cases, some amplitudes are chosen and, under DC reference steady state conditions, the measured error at each measuring point shall be within the prescribed limits. These tests are repeated to verify further deviations due to the influence quantity (temperature, vibrations, etc.). The only test performed in dynamic conditions is a full scale step response: a step, intended to produce a change in output signal from 0 % to 100 % of the output range, is applied to the input of the sensor. The time for the output to change from 0 % to 90 % of the output range shall be not greater than a specified response time. It is apparent that the described tests are intended to a broad verification of EMF performances and are far from real working conditions (unsteady conditions, large superimposed ripple, etc.). Accuracy or response of EMF in these situations remain untested. So, at the moment, for DC railway systems, there is the lack of a metrological framework (comprising laboratory calibration, measurement set ups and robust data processing algorithms) for calibration of devices as high accuracy energy and power quality meter able to verify the uncertainty limits under highly dynamic electrical conditions.

This document takes a step towards the development of enabling technologies that allow to improve the basic test procedures, thus allowing to evaluate the metrological characteristics of the DC voltage and current transducers even in complex conditions, including also real operating conditions.

III. Hardware and Software Features

A simplified block diagram of the system is reported in Figure 1 and it can be divided into four sections composed by a

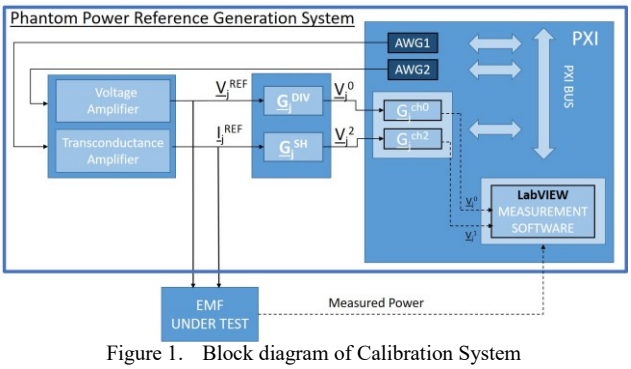

Figure 1. Block diagram of Calibration System

series of subsystems. The section with low amplitude signals is a PXI (PCI eXtension for Instrumentation) system with two generation boards (NI PXI 5422, maximum sampling rate 200 MHz, 16 bit, variable output gain and offset, 256 MB of on-board memory) and one acquisition board (DAQ, NI PXI 4462, 4 channels, input range ± 10 V, 24 bit, sampling rate up to 204.8 kHz).

The amplification section is composed by a transconductance amplifier (three Fluke 52120 A in parallel, up to 360 A, up to 10 kHz) and by a high-voltage power amplifier (NF HVA4321, up to 10 kV, from 0 Hz up to 30 kHz) for current and voltage respectively. The "virtual load" connection scheme allow to emulate power up to 3.6MW. The feedback section is composed by two reference transducers used to provide the generated waveforms to the acquisition boards for the *reference power* calculation: Ohm-LABS CS-300 current shunt (300/30 A/mV) and Ohm-LABS KV-10A resistive-capacitive voltage divider (10/10 kV/V).

The generated voltage and current waveforms are sent to reference transducers and EMUT (Energy Meter Under Test). The two outputs of the reference transducers are simultaneously sampled by the DAQ, at a sampling frequency which depends on the frequency content of the generated signals. However, the minimum sampling frequency is 10 kHz. Acquisition is also synchronized with generation, allowing coherent sampling.

The measurement software was developed in the LabVIEW environment adopting state machine approach for managing generation, acquisition and signal processing. Two different operation modes have been implemented:

- In stationary operation mode, the system performs a steady generation of DC voltage and/or current of arbitrary amplitude with the overlapping of a stationary disturbance defined by an arbitrary sum of sinusoidal components (range 0-10 kHz). These tests are aimed to characterize the behaviour also in the presence of distortion coming from power supply system and/or generated by train drive. Nevertheless, the system does not generate immediately the configured waveform. To avoid a sudden change too high in the generated amplitude, the system provides a ramp of increasing values which, starting from zero, reaches the desired value after 1 s. Then, the measurements are performed and the results are stored. Finally, a descending ramp takes back the amplitude of the generated signal to zero. An example of soft start and soft stop adopted for stationary generation is reported in Figure 2.

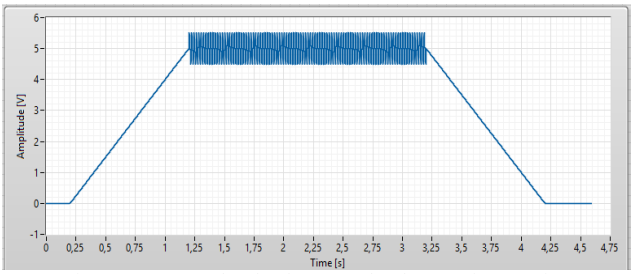

Figure 2. Example of soft start and soft stop of generation

- dynamic operation mode, the system generates voltage and/or current with time varying DC amplitude that can be defined by user or derived by real signals obtained from experimental data. These tests are devoted to characterize the behaviour with the signals that could be found in a real operating conditions. Voltage and Current generations are synchronized.

IV. Analytical Formulation of the Reference Power

The presented testbed assesses the performance of an EMF under test (EMFUT) by comparison with the Reference Energy Meter (REM). A *stationary test* is generated and acquired from both EMFUT and REM. Stationary tests (as described in previous sections) are intended to perform measurements with a steady generation of DC signals of chosen amplitude with the overlapping of a stationary disturbance defined by a sum of arbitrary sinusoidal components.

The *reference active power* is calculated on the samples acquired from reference transducers and it can be expressed as sum of spectral components:

$$P_{REF} = \sum_j V_j^{REF} * I_j^{REF} * \cos\left(\varphi_j^{REF}\right) \tag{1}$$

where j is the spectral component index, V_j^{REF} is the magnitude of j-th component of reference voltage, I_j^{REF} is the magnitude of j-th component of reference current and φ_j^{REF} is phase displacement between them.

Figure 1 shows a block scheme of the calibration system highlighting the transfer functions of the various involved components. With reference to Figure 1, assuming that V^{REF} is acquired by channel 0 and I^{REF} is acquired by channel 2, the phasors of the j-th spectral component of the acquired data can be expressed as:

$$\underline{V}_j^0 = \underline{G}_j^{ch0} \cdot \underline{G}_j^{DIV} \cdot \underline{V}_j^{REF} \tag{2}$$

$$\underline{V}_j^2 = \underline{G}_j^{ch2} \cdot \underline{G}_j^{SH} \cdot \underline{I}_j^{REF} \tag{3}$$

where $\underline{V}_j^0$ ($\underline{V}_j^2$) is the phasor of j-th spectral component of data acquired by channel 0 (channel 2), $\underline{G}_j^{ch0}$($\underline{G}_j^{ch2}$) is the complex gain of channel 0 (channel 2) at that frequency, $\underline{G}_j^{DIV}$ ($\underline{G}_j^{SH}$) is the complex gain of the reference divider (shunt) at that frequency. Inverting (2) and (3), and calculating magnitude and phase it is possible to obtain:

$$V_j^{REF} = \left|\frac{\underline{V}_j^0}{\underline{G}_j^{ch0} \cdot \underline{G}_j^{DIV}}\right| \tag{4}$$

$$I_j^{REF} = \left|\frac{\underline{V}_j^2}{\underline{G}_j^{ch2} \cdot \underline{G}_j^{SH}}\right| \tag{5}$$

$$\varphi_j^{REF} = \angle\underline{I}_j^{REF} - \angle\underline{V}_j^{REF} = \left(\angle\underline{V}_j^2 - \angle\underline{V}_j^0\right) - \left(\angle\underline{G}_j^{ch2} - \angle\underline{G}_j^{ch0}\right) - \left(\angle\underline{G}_j^{SH} - \angle\underline{G}_j^{DIV}\right) \tag{6}$$

Then substituting (4), (5) and (6) in (1) it is possible to calculate the reference active power. Section V explains how all the contribution in (4), (5) and (6) are taken into account to compensate the systematic errors and to evaluate, with an adequate level of accuracy, the *reference active power*.

V. Procedure for Metrological Characterization

In order to evaluate correctly the reference active power, the REM has to take into account:

- the amplitude and phase frequency response of reference voltage divider ($\underline{G}_j^{DIV}$);
- the amplitude and phase frequency response of reference shunt ($\underline{G}_j^{SH}$);
- the absolute gains of input channels (AI0 and AI2);
- the relative phase shift between input channels ($\angle\underline{G}_j^{ch2} - \angle\underline{G}_j^{ch0}$);
- the DC offset of both channel.

First of all, the NI PXI 4462 has been calibrated following the producer's calibration procedure in order to make the systematic deviation of the gain and the offset as small as possible. Then, to characterize the relative gain and phase displacement among channels, the same signal, generated by a calibrator (Fluke 5730a), was given and acquired, at the same time, by both channels. To this aim, the channels were tested with a DC value and with sinusoidal signals performing a frequency sweep from 47 Hz to 9870 Hz with a linear spacing and 210 frequency steps. The 50 Hz frequency was avoided to minimize interference with the supply power system The amplitude in all the tests reached the input full scale of the channels (note that the input range of the various channels has been configured in the same way as would have actually been used in the following experimental tests). In order to obtain a coherent sampling, the acquisition clock has been synchronized with generation system. Then, spectral analyses were performed on the acquired signals, measuring the relative gain and the *relative phase shift* between the channels at each tested frequency.

Moreover, with the same test it has been possible also to characterize the *absolute gain* of the input channel, taking the Fluke 5730a as reference.

Then, to evaluate the channel offsets, all the inputs have been closed with a 50 Ω termination, the input range of the various channels has been configured in the same way as would have actually been used in the following experimental tests, then the input voltage have been acquired.

Offsets, gain ratios and relative phase errors are compensated in all the working conditions.

Both the reference transducers are preliminary characterized. The voltage divider KV-10A has been characterized by a comparison with the INRIM reference voltage divider (30.000/3 V/V, worst expanded uncertainty 0.02% at 10 kHz), while the current shunt CS-300 has been characterized by comparison with a Fluke A40B-100A current shunt (100/800 A/mV, standard uncertainty 30 µA/A @ 1 kHz and 100 µA/A @100 kHz). The signals adopted for the characterization are composed by a DC component at constant amplitude (3 kV and 100 A) with a superimposed sinusoidal tone, with a peak amplitude of 20 % of DC component) and performing a frequency sweep. For these tests, the same set-up of Figure 1 and the same software adopted for the stationary test and described in Section III were used. These measured responses are accounted and compensated in all the working conditions.

VI. Preliminary Experimental Results

A preliminary test of a virtual EMF, that is a PC based data acquisition system which calculates the power from the output samples of a voltage and a current transducer which are currently installed on-board Italian trains, has been performed. The Energy Calculation Function (ECF) has been implemented in in post processing. The signals for ECF have been acquired simultaneously with the reference signals, on channel 1 for voltage and on channel 3 for current of the same acquisition board. The signals are conditioned by means of two transducers currently adopted in the Italian railway system: for Voltage, LEM LV 100-4000 (4000/50 V/mA, Accuracy 0.9%, linearity <0.1 %) and for current, LEM/ABB CS2000 (2000/400 A/mA, Accuracy < 0.5 %, linearity < 0.1 %, Bandwidth DC - 100 kHz). Both transducers under test secondary are connected with a resistive shunt of Fluke A40B series.

The tests were performed in stationary operation mode (see section III), generating a DC Voltage (3 kV) with a single superimposed sinusoidal component with constant amplitude (i.e. 21% of DC component) and frequency, and simultaneously generating a DC current (300 A) with a single super imposed sinusoidal component with a constant amplitude (i.e. 30 % of DC component) and frequency. The emulated phantom power is nominally 900 kW in DC and 56 kW in AC.

The measurements were repeated varying the frequency of voltage and current sinusoidal components in the range from 47 Hz to 9870 Hz with linear spacing and 210 frequency steps. The 50 Hz frequency was avoided to minimize interference with the supply power system. The analysis time is 1 s, averaged on 10 iterations. Only the DC component and the single superimposed tone are considered in (1).

In Figure 3 the relative error on DC active power between EMFUT and REM is reported. It can be seen that: 1) the error in DC is almost constant at about 2.6 %, 2) it is slightly influenced by the presence of distortion and 3) the EMFUT overestimates the DC active power due to transducers under test offsets and gains errors.

In Figure 5 the relative error on AC active power between EMFUT and REM is reported. It can be seen that: 1) the sign of error changes with frequency, 2) the amplitude of error is more

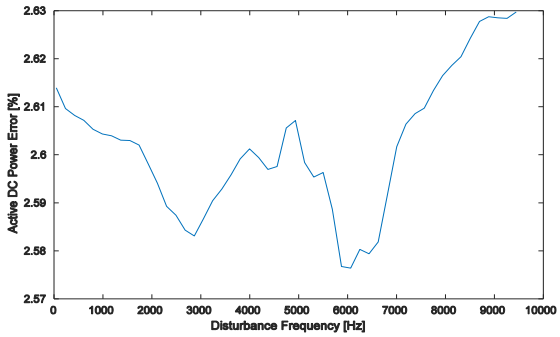

Figure 3. Relative error on DC active power.

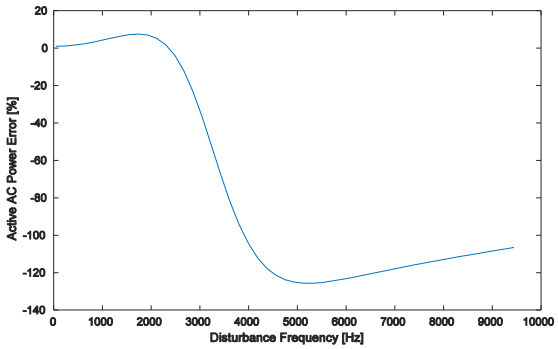

Figure 4. Relative error on AC active power.

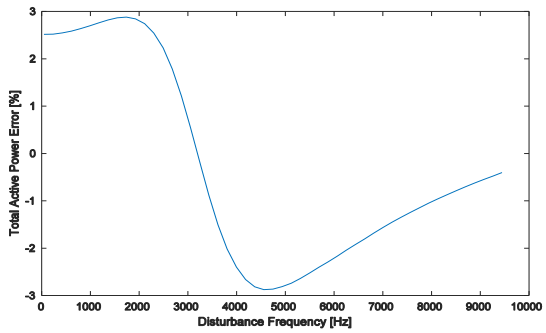

Figure 5. Relative error on total active power.

than 100% over 4 kHz, 3) EMFUT overestimates the AC active power in the rage 0-2kHz and it completely fails the sign of AC contribute over 4 kHz, because of the phase error mainly introduced by the voltage transducer.

Consequently, total active power error, shown in Figure 5, is highly influenced by the sinusoidal disturbances, specially over 4 kHz. At the same time, it is worthwhile noting that between 0 Hz and 2 kHz, the AC contribute increases the total error up to almost 3 %.

VII. Conclusions

In this paper, a reference system for generation of phantom power for the calibration of energy meters for DC railway applications is presented. A preliminary test of a virtual energy meter, that is a PC based data acquisition system which calculates the power from the output samples of a voltage and a current transducer which are currently installed on-board Italian trains, is presented, too. Further studies about the

evaluation of the uncertainty of the calibration system are still in progress.

REFERENCES

[1] UIC IEA Railway Handbook, "Focus on Passenger Transport. 2017 Edition of the UIC-IEA Railway Handbook on Energy Consumption and CO2 focuses on Passenger Rail Services", 2017

[2] Bart Van der Spiegel, "Railway Energy Measuring, Managing and Billing" 2009 6th International Conference on the European Energy Market, Pages: 1 - 8

[3] Official Journal of the European Union, Decision No 406/2009/EC on the effort of Member States to reduce their greenhouse gas emissions to meet the Community's greenhouse gas emission reduction commitments up to 202; 2009.

[4] European Commission, A Roadmap for moving to a competitive low carbon economy in 2050 – Ref. COM(2011) 112 final; 2011

[5] A.González-Gil, R.Palacin, P.Batty, J.P.Powell, "A systems approach to reduce urban rail energy consumption", Energy Conversion and Management, Vol 80, April 2014, P. 509-524

[6] T. Koseki, "Technologies for saving energy in railway operation: general discussion on energy issues concerning railway technology", IEEJ Transactions on Electrical and Electronic EngineeringVol. 5, I. 3, May 2010, P. 285-290

[7] EN 50463-2 – Railway Applications - Energy measurement on board trains - Part 2: Energy measuring

[8] Commission Regulation (EU) No 1301/2014 of 18 Nov. 2014 on the technical specifications for interoperability relating to the 'energy' subsystem of the rail system in the Union

[9] Commission regulation (EU) No 1302/2014 of 18 November 2014 concerning a technical specification for interoperability relating to the 'rolling stock — locomotives and passenger rolling stock' subsystem of the rail system in the European Union

[10] G. Crotti, D. Giordano, A. Delle Femine, D. Gallo, C. Landi and M. Luiso, "A Testbed for Static and Dynamic Characterization of DC Voltage and Current Transducers," 2018 IEEE 9th International Workshop on Applied Measurements for Power Systems (AMPS), Bologna, 2018, pp. 1-6. doi: 10.1109/AMPS.2018.8494873

[11] De Paulis, F., Olivieri, C., Orlandi, A., Giannuzzi, G., Bassi, F., Morandini, C., Fiorucci, E., Bucci, G., "Exploring remote monitoring of degraded compression and bolted joints in HV power transmission lines", (2016) IEEE Transactions on Power Delivery, 31 (5), art. no. 7464343, pp. 2179-2187.

[12] G. Artale *et al*., "PQ Metrics Implementation on Low Cost Smart Metering Platforms. A Case Study Analysis," *2018 IEEE 9th International Workshop on Applied Measurements for Power Systems (AMPS)*, Bologna, 2018, pp. 1-6.

[13] G. Crotti, A. D. Femine, D. Gallo, D. Giordano, C. Landi and M. Luiso, "Measurement of the Absolute Phase Error of Digitizers," in IEEE Transactions on Instrumentation and Measurement. doi: 10.1109/TIM.2018.2888919

[14] Bucci, G., Ciancetta, F., Fiorucci, E., Ometto, A., "Uncertainty Issues in Direct and Indirect Efficiency Determination for Three-Phase Induction Motors: Remarks About the IEC 60034-2-1 Standard", (2016) IEEE Transactions on Instrumentation and Measurement, 65 (12), art. no. 7551206, pp. 2701-2716.

[15] G. Artale, A. Cataliotti, V. Cosentino, D. Di Cara, R. Fiorelli, S. Guaiana, N. Panzavecchia, G. Tinè, "A new PLC-based smart metering architecture for medium/low voltage grids: Feasibility and experimental characterization", Measurement: Journal of the International Measurement Confederation, vol. 129, 2018, pp. 479-488.

[16] A. Cataliotti et al., "Compensation of Nonlinearity of Voltage and Current Instrument Transformers," in IEEE Transactions on Instrumentation and Measurement. doi: 10.1109/TIM.2018.2880060

[17] A. J. Collin, A. Delle Femine, D. Gallo, R. Langella and M. Luiso, "Compensation of Current Transformers' Non-Linearities by Means of Frequency Coupling Matrices," 2018 IEEE 9th International Workshop on Applied Measurements for Power Systems (AMPS), Bologna, 2018, pp. 1-6. doi: 10.1109/AMPS.2018.8494893

[18] S. Rinaldi *et al*., "Characterization of IP-Based Communication for Smart Grid Using Software-Defined Networking," in *IEEE Transactions on Instrumentation and Measurement*, vol. 67, no. 10, pp. 2410-2419, Oct. 2018.

[19] Dolce, S., Fiorucci, E., Bucci, G., D'Innocenzo, F., Ciancetta, F., Di Pasquale, A., "Test instrument for the automatic compliance check of cast resin insulated windings for power transformers", (2017) Measurement: Journal of the International Measurement Confederation, 100, pp. 50-61.

[20] A. Cataliotti, V. Cosentino, S. Guaiana, D. Di Cara, N. Panzavecchia and G. Tinè, "Experimental investigation on PLC signal crossing of power transformers," *2014 IEEE International Instrumentation and Measurement Technology Conference (I2MTC) Proceedings*, Montevideo, 2014, pp. 1235-1239.

[21] G. Crotti et al., "Pantograph-to-OHL Arc: Conducted Effects in DC Railway Supply System," 2018 IEEE 9th International Workshop on Applied Measurements for Power Systems (AMPS), Bologna, 2018, pp. 1-6. doi: 10.1109/AMPS.2018.8494897

[22] Del Prete, S., Delle Femine, A., Gallo, D., Landi, C., Luiso, M., "Implementation of a distributed Stand Alone Merging Unit", (2018) Journal of Physics: Conference Series, 1065 (5), DOI: 10.1088/1742-6596/1065/5/052042

[23] Bucci, G., Ciancetta, F., Fiorucci, E., Vegliò, F., "An experimental approach to the modeling of PEM fuel cells in dynamic conditions", (2007) 2007 IEEE Lausanne POWERTECH, Proceedings, art. no. 4538468, pp. 1094-1099.

[24] G. Artale *et al*., "A new low cost power line communication solution for smart grid monitoring and management," in *IEEE Instrumentation & Measurement Magazine*, vol. 21, no. 2, pp. 29-33, April 2018.

[25] Delle Femine, A., Gallo, D., Giordano, D., Landi, C., Luiso, M., Signorino, D., "Synchronized Measurement System for Railway Application", (2018) Journal of Physics: Conference Series, 1065 (5), DOI: 10.1088/1742-6596/1065/5/052040

[26] G. Artale, A. Cataliotti, V. C. S. Nuccio, D. Di Cara, G. Tinè and G. Privitera, "A set of indicators for arc faults detection based on low frequency harmonic analysis," 2016 IEEE International Instrumentation and Measurement Technology Conference Proceedings, Taipei, 2016, pp. 1-6.

[27] Crotti, G., Delle Femine, A., Gallo, D., Giordano, D., Landi, C., Letizia, P.S., Luiso, M., "Calibration of Current Transformers in distorted conditions", (2018) Journal of Physics: Conference Series, 1065 (5), DOI: 10.1088/1742-6596/1065/5/052033

[28] A. Cataliotti, V. Cosentino and S. Nuccio, "The Measurement of Reactive Energy in Polluted Distribution Power Systems: An Analysis of the Performance of Commercial Static Meters," in IEEE Transactions on Power Delivery, vol. 23, no. 3, pp. 1296-1301, July 2008

[29] EURAMET Joint Reaserch Program "Metrology for Smart Energy Management in Electric Railway Systems" 16ENG04 MyRailS

[30] E. Mohns, P. Räther and H. Badura, "An AC Power Standard for Loss Measurement Systems for Testing Power Transformers," in IEEE Transactions on Instrumentation and Measurement, vol. 66, no. 9, pp. 2225-2232, Sept. 2017.

[31] G. Rietveld, E. Mohns, E. Houtzager, H. Badura, D. Hoogenboom and H. Khalilnezhad, "Comparison of two Reference Setups for Calibration of Power Transformer Loss Measurement Systems," 2018 Conference on Precision Electromagnetic Measurements (CPEM 2018), Paris, 2018, pp. 1-2