POLITECNICO DI TORINO
Repository ISTITUZIONALE

DEVICE FOR OBTAINING THREE-DIMENSIONAL CELL CULTURES, METHOD FOR THE IMPLEMENTATION

Original
DEVICE FOR OBTAINING THREE-DIMENSIONAL CELL CULTURES, METHOD FOR THE IMPLEMENTATION THEREOF, AND USE OF SUCH DEVICE / DI FABRIZIO, ENZO MARIO; Limongi, Tania; Gentile, Francesco; Marotta, Roberto; Benfenati, Fabio; Cesca, Fabrizia. - (2013).

Availability:
This version is available at: 11583/2853370 since: 2020-11-19T18:27:33Z

Publisher:

Published
DOI:

Terms of use:

This article is made available under terms and conditions as specified in the corresponding bibliographic description in the repository

Publisher copyright

(Article begins on next page)

12 October 2024

(12) INTERNATIONAL APPLICATION PUBLISHED UNDER THE PATENT COOPERATION TREATY (PCT)

(19) World Intellectual Property Organization
International Bureau

(43) International Publication Date
24 October 2013 (24.10.2013)

WIPO | PCT

(10) International Publication Number
WO 2013/156941 Al

(51) International Patent Classification:
BOIL 3/00 (2006.01) *C12M 1/34* (2006.01)
B08B 17/00 (2006.01)

(21) International Application Number:
PCT/IB2013/053041

(22) International Filing Date:
17 April 2013 (17.04.2013)

(25) Filing Language: Italian

(26) Publication Language: English

(30) Priority Data:
TO2012A00033 1 17 April 2012 (17.04.2012) IT

(71) Applicant: **FONDAZIONE ISTITUTO ITALIANO DI TECNOLOGIA** [IT/IT]; Via Morego 30, 1- 16163 Genova (IT).

(72) Inventors: **DI FABRIZIO, Enzo;** Viale Regina Margherita 216, 1-00198 Roma (IT). **LIMONGI, Tania;** Via Cantore 40/8, 1-16100 Genova (IT). **GENTILE, Francesco;** Via Papa Giovanni XXIII 29, 1-87040 CASTROLIBERO (Cosenza) (IT). **MAROTTA, Roberto;** Via Chavez 19, 1-20133 Milano (IT). **BENFENATI, Fabio;** Via E. Ravano 3, 1-16167 Genova (IT). **CESCA, Fabrizia;** Passo Palestro 2/13, 1-16122 Genova (IT).

(74) Agents: **FASSIO, Valeria** et al; c/o JACOBACCI & PARTNERS S.p.A., Corso Emilia 8, 1- 10152 Torino (IT).

(81) Designated States *(unless otherwise indicated, for every kind of national protection available):* AE, AG, AL, AM, AO, AT, AU, AZ, BA, BB, BG, BH, BN, BR, BW, BY, BZ, CA, CH, CL, CN, CO, CR, CU, CZ, DE, DK, DM, DO, DZ, EC, EE, EG, ES, FI, GB, GD, GE, GH, GM, GT, HN, HR, HU, ID, IL, IN, IS, JP, KE, KG, KM, KN, KP, KR, KZ, LA, LC, LK, LR, LS, LT, LU, LY, MA, MD, ME, MG, MK, MN, MW, MX, MY, MZ, NA, NG, NI, NO, NZ, OM, PA, PE, PG, PH, PL, PT, QA, RO, RS, RU, RW, SC, SD, SE, SG, SK, SL, SM, ST, SV, SY, TH, TJ, TM, TN, TR, TT, TZ, UA, UG, US, UZ, VC, VN, ZA, ZM, ZW.

(84) Designated States *(unless otherwise indicated, for every kind of regional protection available):* ARIPO (BW, GH, GM, KE, LR, LS, MW, MZ, NA, RW, SD, SL, SZ, TZ, UG, ZM, ZW), Eurasian (AM, AZ, BY, KG, KZ, RU, TJ, TM), European (AL, AT, BE, BG, CH, CY, CZ, DE, DK, EE, ES, FI, FR, GB, GR, HR, HU, IE, IS, IT, LT, LU, LV,

[Continued on next page]

(54) Title: DEVICE FOR OBTAINING THREE-DIMENSIONAL CELL CULTURES, METHOD FOR THE IMPLEMENTATION THEREOF, AND USE OF SUCH DEVICE

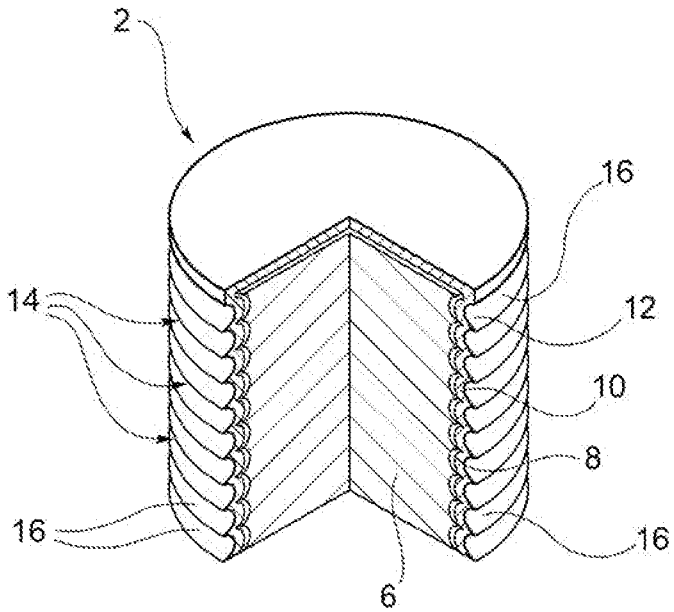

FIG. 2

(57) Abstract: A device for obtaining three-dimensional cell cultures comprising: a substrate (1); a plurality of micro-structures (2) which protrude from the surface of the substrate (1) and are arranged on such substrate (1) according to a periodical grid so as to make the substrate (1) super hydrophobic. The device is characterised in that the micro-structures (2) have side walls at least partially nano-patterned and have projections (14) and recesses (16) alternated with a predetermined distance.

WO 2013/156941 A1

MC, MK, MT, NL, NO, PL, PT, RO, RS, SE, SI, SK, SM, TR), OAPI (BF, BJ, CF, CG, CI, CM, GA, GN, GQ, GW, ML, MR, NE, SN, TD, TG).

Declarations under Rule 4.17:

— *as to applicant's entitlement to apply for and be granted a patent (Rule 4.17(H))*

— *of inventorship (Rule 4.17(iv))*

Published:

— *with international search report (Art. 21(3))*

Device for obtaining three-dimensional cell cultures, method for the implementation thereof and use of such device

The present invention relates to a device for obtaining three-dimensional cell cultures, to a method for the implementation thereof, and to a use of such device for obtaining suspended cells not adherent to the substrate.

Propensity of a cell to adhere, grow, and differentiate on a compact substrate (or support) or on a scaffold having a supporting function is one of the most important aspect of tissue engineering and biomaterials characterization.

Most of the physiological and pathological cell processes, such as growth, adhesion, migration, secretion, and death are affected by the extracellular matrix three-dimensional organization. Cells respond to local concentrations of a great number of molecules that can be dissolved in extracellular media (gases, amino acids, ions, drugs), which are present on the growth surface and on the membrane of the adjacent cells (membrane receptors).

In three-dimensional cultures, the ratio between cells and substrate is controlled by the geometrical characteristics and the chemical and physical properties of the support, with the aim of producing cell cultures *in vitro* with an organization and functionality as near to those of native tissues as possible.

It is known that a cell behaviour can be controlled and guided through changes in the topographic characteristics of the support surface, on a micro- and nano-metric scale. It is exactly in this context that controlling the wettability may also have a very important role in optimizing the performance of biocompatible substrates.

By imposing specific geometries to the surface of a biocompatible solid device and changing the wettability characteristics thereof, it is possible to increase its surface-volume ratio, thus making, on a dimensional point of view, also the device geometric characteristics compatible with the morphologic characteristics of the cell type that is used.

Hence, wettability and roughness of the growth supports are to be considered among the most important factors influencing cell spreading, alignment, and migration.

One of the theories validating these cell behaviours is the "contact guide effect" theory, according to which focal contacts mediated by integrins transfer variable degrees of tension and/or compression to the cytoskeleton elements by following the surface topographic variations. Such theory is described in the article by Tan, J. L. ***et al.*** Cells lying on a bed of microneedles: An approach to isolate mechanical force. ***Proceedings of the National Academy of Sciences of the United States of America*** 100, 1484-1489, doi:10.1073/pnas.023 5407 100 (2003).

The ability to grow by responding to the growth support topographic characteristics is well known for different cell types; they show interesting growth responses when plated on substrates characterized in surface by different geometries and different degrees of superhydrofobicity.

However, there are cell types that normally grow while being adherent to the substrate surface, such as neuronal cells. For such cell types, substrates capable of allowing a suspended growth thereof are not known.

Document WO 2010/023635 discloses a device in which, on a substrate, a plurality of micro-structures mutually spaced apart in a periodical manner are obtained, so as to make the substrate super hydrophobic, intended to the use for the concentration and localization of a solute in a reduced portion of space.

Among the systems used most recently for three-dimensional growing cells there are matrices of synthetic or natural biodegradable polymers. With regard to the various applications, polymers with different porosities can be obtained in devices such as membranes, films, and nano-tubes, as described in Langer, R. & Tirrell, D. A. Designing materials for biology and medicine. ***Nature*** 428, 487-492, doi: 10.1038/nature02388 (2004).

For example, tubes made of a collagen matrix are used to promote nervous tissue regeneration, and materials in gel form are used mainly for isolation or as substrates for the connective tissue regeneration.

In most cases, these devices are composed of a porous matrix on which the cells attach. Within the pores, in addition to the cells, the fluid acting as a nutrient also must fit in. Cell growth is strongly related to the amount of nutrients that are present in the growth medium and the motion type of the fluid. When a uniform culture inside the whole cellular construct is required, it will be necessary that the nutrient fluid succeeds in invading each pore of the matrix. On the other hand, the cell growth, in time, fills the voids that are present in the matrix, thus causing the nutrient flow to decrease.

The known supporting devices for the three-dimensional growth of suspended cells are not perfectly able to provide a sufficient amount of nutrients, while suitably removing waste products.

Furthermore, the limitations in standard treatment of peripheral nerve injuries, requiring the implantation of an autologous nerve, thus leading to a deficit at the donor, and requiring additional surgery, have driven the research for bioengineering solutions in manufacturing artificial implants allowing obtaining a good neural tissue regeneration.

Therefore, object of the present invention is to propose a device for obtaining three-dimensional cell cultures, which is capable of overcoming the above-mentioned problems, and allowing the growth of suspended cells also for cell types that usually grow while being adherent to the substrate, particularly for nervous tissue regeneration applications.

A further object of the present invention is to propose a method for manufacturing the above-mentioned device and a use of such device for obtaining suspended cells not adherent to the substrate.

These and other objects are achieved by a device, whose characteristics are defined in claim 1, with a method for obtaining such device, whose characteristics are defined in

claim 7, and with a use of such device for obtaining suspended cells not adherent to the substrate, as described in claim 13.

Particular embodiments are the subject of the dependent claims, the content of which is to be meant as an integral and integrating part of the present description.

Further characteristics and advantages of the invention will be apparent from the following detailed description, given by way of non-limiting example only, with reference to the appended drawings, in which:

- Fig. 1 is a top view of a device according to the invention,
- Fig. 2 is a perspective enlargement of one of the nano-structures of the device of Fig. 1, and
- Fig. 3 is a side view of the nano-structure of Fig. 2.

In brief, the invention uses techniques of micro-fabrication for manufacturing a super hydrophobic device having structures with side walls at least partially nano-patterned, used in cell culture methods for obtaining cells that are suspended, or not completely adherent to the substrate, in particular for the three-dimensional growth of hippocampal neuronal cells and for the growth of hippocampal neurons and glial cells co-culture.

Such device combines two types of topographic details, having dimensions on a different scale, respectively, in particular micrometric structures conferring superhydrofobicity to the substrate surface, while nano-metric features of such micrometric structures make the stratification in three dimensions of the cell cultures possible.

The surface geometry of the supports is characterized by large free spaces between a micro-structure and the adjacent one, and this allows a better recirculation of the nutrient substances and easier gaseous exchanges between the cells and the growth medium.

Compared to the conventional cell cultures *in vitro*, the device of the present invention allows achieving results that are qualitatively higher by providing to the cells the correct amount of nutrients and mechanical stimuli for the development of co-cultures and tissues

for biomedical applications that are more reproducible and cost effective.

Therefore, the invention aims to manufacturing nano-patterned superhydrofobic devices for the three-dimensional growth of normal cells (also in co-culture), for the study of the spatial arrangement of tumoral cell cultures; for pharmacological and toxicological screening tests *in vitro,* aimed to cell therapy.

The invention allows performing tissue engineering applications, such as nervous regeneration.

In Fig. 1, the device according to the invention is illustrated, comprising a substrate 1 for example made of silicon or a biocompatible or bioerodible polymeric material, and a plurality of micro-structures 2, in particular micro-cylinders, extending from the substrate.

Such micro-structures 2 can advantageously have a section in a circular, squared, rectangular, hexagonal shape, or any other shape.

Such micro-structures 2 are preferably arranged orthogonally to the surface of the substrate 1 and are located on the substrate 1 according to a periodical grid so as to make the substrate 1 super hydrophobic.

By the term super hydrophobic in the present description is meant a surface on which the contact angle that a drop of (distilled) water forms with the surface itself is above 150°. The contact angle is the angle formed by the tangent at the liquid-vapor interface with the tangent at the liquid-solid interface. Obtaining micro-patterned super hydrophobic surfaces is a function of the surface density and the transversal dimension of the micro-structures. The design principles for manufacturing the above-mentioned micro-patterned super hydrophobic surfaces are *per se* known and are described, for example, in de Angelis, F. et al. *"Breaking the diffusion limit with super-hydrophobic delivery of molecules to plasmonic nanofocusing SERS structures"*, Nature Photonics, Volume 5, Issue 11, pp. 682-687 (2011), incorporated herein for effect of such quote.

Advantageously, the substrate 1 has a resistivity of about 5-10Ω/cm.

The micro-structures 2 are obtained by lithography and etching processes, or micromoulding processes, ***per se*** known, as described herein below.

The micro-structures 2 are spaced apart on the substrate 1 by a predetermined distance 4 preferably ranging within 15-30μm.

The micro-structures 2 have preferably a base width ranging within 5-20μm, and a height ranging within 5-30μm.

By the term base width is meant in the present description the minimum dimension among those defining the section shape.

The base width and the distance 4 between the micro-structures 2 are selected according to a***per se*** known criterion from the above-mentioned article.

In this manner, a small fraction of solid material of the overall device is obtained, which, in the case of micro-cylinders, is of:

$$f=\frac{\pi}{4}*\frac{d^2}{(l+d)^2}\sim 0.09$$

where 1is the distance 4 and d is the diameter of the micro-cylinders.

Such fraction f allows increasing the hydrofobicity of the substrate 1, which therefore becomes able to reach contact angles approaching to 170°. However, the parameter f is still sufficiently large to prevent the collapse of the drop at the early stages of evaporation.

In order to use the device for the objects that are the subject-matter of the invention, it is preferred to apply on the device surface coatings suitable to promote the growth of cell cultures while maintaining or imposing the superhydrofobicity properties. To this aim, the application of a biocompatible coating (where the substrate is not ***per se*** biocompatible) can be contemplated, for example, a metallic, glass, or glass-ceramic coating, and an

optional adhesion layer for said biocompatible coating, applied on the substrate surface. A thin hydrophobic polymeric coating, for example, a fluorinated polymer, as obtained by the polymerisation of octafluorocyclobutane, can finally be applied to the biocompatible coating, having thicknesses such as not to change the device superficial biocompatibility.

In Fig. 2, a perspective enlargement is illustrated of one of the micro-structures of the device of Fig. 1.

The side walls of the micro-structure 2 are not smooth, but they are patterned, i.e., they have alternated projections 14 and recesses 16, with a predetermined pitch (or spatial distance) depending on the duration of the plasma isotropic dry etching step and the deposition step of a passivation layer, described herein below.

The height of the projections 14 or recesses 16 can be constant along the whole wall of a micro-structure, or it can vary, as well as the height between adjacent projections 14 and recesses 16 can be the same or different.

In the present description by the term smooth is meant that the side wall of a micro-structure, as seen in section of a plane parallel to the main extension axis of the micro-structure, has a rectilinear profile r and it does not have projections and recesses.

In Fig. 3, a side view of the micro-structure 2 of Fig. 2 is shown, in which the height h of the micro-structure 2 and the height h_i separating two adjacent projections 14 are highlighted, respectively.

In a variant of the invention, the micro-structures 2 do not have completely patterned side walls, but they have an alternation of patterned zones (bands) and smooth zones (bands) without projections 14 and recesses 16.

Preferably, the device of the present invention also comprises a plurality of electrodes, each associated to a micro-structure 2 (whether it is of the type with completely patterned side walls, or of the type with side walls with alternation of smooth zones and patterned

zones), connected to conductive tracks manufactured in a ***per se*** known manner in the substrate 1. In such a manner, it is possible to apply voltages to such electrodes, therefore to such micro-structures 2, thus obtaining an electric device.

Advantageously, the device of the present invention also comprises a plurality of micro-channels, which can be manufactured in a ***per se*** known manner, allowing controlled changes of medium or cytotoxicity tests.

Advantageously, the device of the present invention comprises an alphanumerical grid, located in the peripheral zone of the substrate 1, so as to easily allow counting and localizing the cells, to allow an analysis by different techniques, such as confocal optical microscope, or atomic force microscope, Raman spectroscopy, or also SEM.

The manufacturing method of the above-described device will be now described, respectively for the case where the substrate is made of silicon or a bioerodible and biocompatible polymeric material.

In the case that the substrate 1 is made of silicon, it is first cleaned in a ***per se*** known manner.

Subsequently, a ***per se*** known optic lithography step is performed, by using an optical mask obtained by a laser writing process.

Particularly, a regular pattern of disks (or other polygons) is obtained within a covering layer that had previously deposited by spin coating on the cleaned substrate 1.

Then a covering mask is obtained, comprising a plurality of disks or polygons by carrying out an optic lithography on a uniform covering layer deposited on the substrate 1, for example, a resist, using in a known manner a light beam having a predetermined wavelength λ ranging within between 350 and 450nm.

Subsequently, in a known manner, the covering layer externally to the disks (or polygons)

is removed, and in the following step a dry etching step of the DRIE type is carried out, of the substrate 1, by using the pre-prepared covering mask.

After the etching step, the above-described micro-structures 2 are obtained (thus having all the spatial disposition characteristics illustrated above) and having an aspect ratio, i.e., the ratio between the height of the micro-structure 2 and the area of the base thereof, higher than 2.

The DRIE process used repeatedly alternates three steps:

- deposition of a chemically inert passivation layer;
- dry etching with isotropic plasma;
- cleaning the substrate 1 and the chamber where the etching is performed.

By virtue of this alternation of steps, micro-structures 2 are obtained, having nano-patterned side walls as shown in Fig. 2.

The passivation, dry etching, and cleaning steps have respective time durations ti, t_2 and t_3; the ratio r=t[/t_2 has a predetermined value, for example, ranging between 0.5 and 1.5, and it is from such value that the possibility to obtain micro-structures 2 with substantially vertical walls is derived.

Any deviation from r would unbalance the process: if tj/t_2 is higher than r, passivation step would dominate over dry etching, and therefore the micro-structures 2 would be frustoconical shaped; if t_1/t_2 is lesser than r, the dry etching would dominate over the passivation step, and the micro-structures 2 would be shaped into an upside-down frustum.

The total time t= ti+t_2+t_3 defines the total duration of a cycle; provided that ti/t_2 is held constant at the predetermined value as defined above, the total time t can be selected as required. The longer t, the longer the recesses 16 of the side walls will be.

Subsequently, the covering layer is removed in a ***per se*** known manner with a removal solution.

Finally, the above-described coatings are deposited on the substrate.

In the case where the substrate 1 of the device of the invention is made of a bioerodible and biocompatible polymeric material, initially a mould (master) of a rigid and undeformable material is made, such as, for example, silicon. The mould is manufactured starting from a starting substrate, in a similar manner to what has been described above with reference to the implementations steps of the micro-structures 2. The parameters ***d***, *I*, and / remain the same and are inspired to the same designing criteria.

The mould manufacturing process provides for the use of the same micro-optic lithography techniques as described above. Particularly, the same covering layer is used to obtain a covering mask complementary to that described above.

On the starting substrate for manufacturing the mould a uniform covering layer is deposited, by spin coating, on which, in a ***per se*** known manner by a lithographic process, a regular pattern of disks (or other polygons) is obtained.

A covering mask is thus obtained.

Subsequently, the covering layer within the disks (or other polygons) is removed in a known manner, and, in the following step, a dry etching step of the DRIE type is carried out, as described above, by virtue of which the starting substrate is eroded at the disks, thus obtaining a mould comprising a plurality of holes having the same characteristics of the micro-structures 2 described above.

Particularly, such holes, by virtue of the alternation of steps of the DRIE process, have nano-patterned side walls.

After the dry etching step, the covering mask is removed in a known manner and the mould is then further cleaned.

Preferably, the so-obtained mould is silanized in a vacuum reaction bell, and it is

subsequently "baked" at temperatures ranging between 100° C and 120° C.

At this point, bioerodible and biocompatible polymeric material is brought to melt in a known manner on a support.

Subsequently, the mould is placed in contact with said molten bioerodible and biocompatible polymeric material, avoiding the formation of air bubbles at the interface between the mould and the biocompatible material, so as to carry out a micromoulding process as described herein.

A forming or moulding step of the bioerodible and biocompatible polymeric material layer is carried out in a known manner.

The forming or moulding process comprises two steps:

1) forming or moulding at a constant pressure;
2) solidification at a constant pressure until reaching room temperature.

Finally, the bioerodible and biocompatible polymeric material is released from the mould by first removing the support, then separating the mould and the biocompatible material substrate with a slight pulling action.

Two implementation examples of the methods described above are described herein below, such examples being given by way of illustrative example only, non-limiting to the scope of the invention.

Implementation example No. 1

A first implementation example of the present invention comprises the use of a P doped silicon substrate 1 and the micro-structures 2 are arranged on the substrate 1 according to a periodical hexagonal grid and are spaced apart by a distance 4 of 20μιη. The micro-structures 2 have a base width of IOμιη and a height of IOμιη.

The micro-structure 2, having a P doped silicon core 6, are coated with a first titanium layer 8, completely covering the core 6, a second gold layer 10, covering the first layer 8, and a third layer 12, covering the second layer 10, of a hydrophobic polymer obtained by performing a polymerisation of octafluorocyclobutane (C_4Fg).

To obtain such device, the silicon substrate is first cleaned with acetone and isopropanol, and, after immersion in a 4% hydrofluoric acid solution, it is cleaned with deionized water and dried with nitrogen.

For the optic lithography, a Mask Aligner of the type MA6/BA6, SUSS MICROTEC is used, obtaining a regular pattern of disks (or other polygon) within a covering layer of AZ5214 negative resist.

Then the Mask Aligner produce a resist mask by carrying out an optic lithography on a uniform resist layer deposited on the substrate 1, using in a known manner a light beam having a wavelength λ ranging between 350 and 450nm.

The dry etching step is carried out with a ICP-RIE, SI 500, Sentech Instrument GmbH instrument, and the used DRIE process repeatedly alternates three steps:

- deposition of a layer of a polymer obtained by polymerisation of octafluorocyclobutane (C_4F_8);
- dry etching with isotropic plasma with sulphur hexafluoride (SF_6);
- a cleaning of the substrate 1 and the chamber where the etching is performed.

The value $r=t_1/t_2$ has a value ranging between 0.5 and 1.5 and with ti=8s, t_2=7s and t_3=4s recesses 16 having a spatial periodicity of 500nm are obtained.

Finally, the covering layer is removed with H_2S0_4:H_20_2=3:1 v/v.

A this point, a first titanium layer having a thickness of 5nm and a second gold layer having a thickness of lOOnm are deposited on the substrate 1 by sputtering. The titanium layer improves adhesion of the gold layer.

Finally, the second layer is coated with a 5nm third layer of a hydrophobic polymer obtained by polymerisation of octafluorocyclobutane (C_4F_8).

Implementation example No. 2

A second implementation example of the present invention comprises the use of a substrate 1 of polycaprolactone (PLC), and the micro-structures 2 are arranged on the substrate 1 according to a periodical hexagonal grid and are spaced apart by a distance 4 of 20μm. The micro-structures 2 have a base width of IOμπι and a height of IOμπι.

In this case, coating are not provided for.

A silicon master is obtained by using the same micro-optic lithography techniques described above. Particularly, negative resist layer of the AZ5214 type is used to obtain a covering mask complementary to that described above.

After DRIE etching and after obtaining a mould comprising a plurality of holes having the same characteristics of the micro-structures 2 as described above, the covering mask is removed by sonication in acetone at 55° C, and the mould is cleaned by a piranha solution.

The so-obtained mould is silanized in a vacuum reaction bell, and it is then "baked" at 112° C.

It is brought to melt on a silanized glass slide arranged on a Sigma type polycaprolactone plate at 133°, with M_w=77000 and T_{melt}= 65° C in pellets.

Then the mould is placed in contact with polycaprolactone as described before, the forming or moulding step is carried out by a Nanoimprinter type press, Obducat.

The forming or moulding process comprises the steps of:

1) forming or moulding at a constant pressure at 5 bar at 68° C;
2) solidifying at a constant pressure a 5 bar until reaching room temperature.

Finally, the polycaprolactone is released from the mould, by first removing the glass slide and then by separating in water the mould and the polycaprolactone substrate by a slight pulling action.

The thus described process is optimized for small moulding surfaces (for example, about 1 cm^2) and high final thicknesses of the bioerodible and biocompatible polymeric material layer (for example, about 500 μηι), but it can be further optimized for different moulding surfaces and thicknesses.

A method to obtain three-dimensional cell cultures of suspended cells will be now described.

If a drop of growth medium, of the type described herein below, is deposited on the surface of the device of the present invention, it keeps an almost spherical shape with a contact angle at the air-water interface that can be theoretically predicted in a ***per se*** known manner, by using the Cassie and Baxter model. According to such model, the wettability behaviour of the device surface is described by the sole parameter f. When f tends to zero, at the interface with the device substrate 1, the liquid mostly "senses" air, and the drop would resemble a perfect sphere.

By virtue of this, the device can be suitably used to manipulate different samples of biomedical interest.

Ii is generally known that the hydro-repellent properties of the superhydrofobic materials reduce the water contact area on their surface, thereby minimizing the absortion of particles or molecules. The nano-patterned superhydrofobic surface of the device of the invention is used as a substrate for cell cultures.

In order to make so that on the device described above three-dimensional cell cultures can be obtained, it is essential to provide for seeding the cells in a superhydrofobicity condition.

As the first step of the method of use of the nano-patterned super hydrophobic device (DSN) of the present invention, such device is coated with a material promoting the adhesion for the cells to be grown, such as, for example poly-D-lysine.

Subsequently, cells to be grown are deposited on the device, preferably, a predetermined number of such cells is deposited in a single drop of a predetermined growth medium (Plating Medium -PM).

The drop deposited on the DSN surface takes an almost spherical shape, with a contact angle above 160°, which is maintained by the relative humidity that is present in the incubator of the cell culture. The high relative humidity rate prevents a rapid PM evaporation and a reduction in the diameter of the medium drop in which the cells are dispersed.

At this point, the cells are left in incubation in superhydrofobicity for a predetermined time interval ranging between 4 and 6 hours, and then the PM is removed and replaced with maintenance medium.

The cells previously dispersed in PM, during their incubation in superhydrofobicity migrate towards the liquid-air-surface interface of the device. The cells build up in a very localized region, increasing the density thereof, strengthening cell adhesion and their ability to form extensions forming points extending from a micro-structure 2 to an adjacent one.

An example of a method for obtaining three-dimensional cell cultures of suspended cells is described herein below, such an example being given by way of illustrative example, non-limiting to the scope of the invention.

Implementation example

A device having an area of $1cm^2$ is coated with poly-D-lysine (in a concentration of 1-10(^g/ml).

Subsequently, 50,000 hippocampal cells are deposited on the device in a single drop of IOOμI PM containing 10% horse serum and 2mM glutamine and antibiotics.

The drop takes an almost spherical shape, with a contact angle above 160° kept by a relative humidity of more than 80% that is present in the incubator of the cell culture at 37° C.

At this point, the cells are left to incubate.

After 4 hours in superhydrofobicity culture, the growth medium is removed and replaced by 2ml Neurobasal maintenance medium containing 2% B27 2mM glutamine and antibiotics.

By a confocal microscope and SEM analysis, it is noticed that starting from the first 4 hours of growth, neuritis adhere to the micro-patterned structures 2, and upon growing, they push neurons into a suspended bridge position.

Therefore, the device of the present invention is particularly suitable for nervous regeneration applications, when manufactured with biocompatible and biodegradable materials. Particularly, it can act as an aid by combining the principles of:

- co-implantation of cell lines of nerves or glial cells by performing a crucial role in supporting axons regeneration after peripheral nerve injuries;
- obtainment of large channels (10-20μm) oriented towards the biological tissue to increase cell infiltration, migration and tissue interruption.

The type of cell growth described above allowed underlining the implications of these observations for designing future biomaterials applicable, besides to the nervous regeneration context, also in other tissue engineering fields, or for applications relating to cell toxicity and invasivity tests, as well as for optogenetics studies in which the integration between cells and optical fibros is improved by their arrangement along the axis z.

One last application is related to the DNA manipulation on superhydrofobic scaffolds, for manipulating nucleic acids, and implementing transfection systems.

In summary, a vertically patterned silicon device with micro-structures 2 aligned and periodically spaced apart is able to control wettability and have a distinctive role in the three-dimensional culture of cells.

By adding a third dimension to the conventional bidimensional culture techniques, significant differences in the features of the thus-obtained cells are obtained, which cells show behaviours very similar to those of the cells within native tissues.

This new type of three-dimensional growth device can be easily seeded by an automatic process, making its high-throughput use possible for any laboratory.

Of course, without prejudice to the principle of the invention, the embodiments and implementation details will be able to be widely varied with respect to what has been described and illustrated by ways of non-limiting example only, without for this departing from the scope of the invention as defined in the appended claims.

CLAIMS

1. A device for obtaining three-dimensional cell cultures comprising:

- a substrate (1);
- a plurality of micro-structures (2) which protrude from the substrate surface (1) and which are arranged on such substrate (1) according to a periodical grid so as to make the substrate (1) super hydrophobic;

the device being characterised in that the micro-structures (2) have side walls at least partially nano-patterned, showing projections (14) and recesses (16) alternated with a predetermined distance.

2. The device according to claim 1, wherein the side walls of the micro-structures (2) have nano-patterned zones alternated with smooth zones without projections (14) and recesses (16).

3. The device according to claim 1 or 2, wherein each micro-structure (2) comprises a silicon core, a biocompatible coating, and possibly an adhesion layer for said biocompatible coating, applied to the surface of the substrate (1).

4. The device according to claim 3, further comprising a hydrophobic polymeric coating layer, applied to the biocompatible coating, having thicknesses such as not to modify the superficial biocompatibility of the device.

5. The device according to claim 1 or 2, wherein each micro-structure (2) comprises a core of a bioerodible and biocompatible polymeric material.

6. The device according to any of the preceding claims, comprising cells to grow suspended and not adherent to the substrate (1).

7. A method for the production of a device for obtaining cell cultures according to one of the claims 1 to 6, or of a mould, comprising a substrate with a micro-structured surface where said substrate is made of silicon or of biocompatible polymeric material, the method

comprising the steps of:

a) optic lithography for manufacturing a covering mask, starting from a covering layer previously deposited on the substrate, of a material susceptible to dry etching, wherein said covering mask defines:

i) a pattern formed by a plurality of micro-areas arranged according to a periodical grid corresponding to the periodical grid of arrangement of the plurality of micro-structures (2), or

ii) a pattern complementary to said periodical grid;

b) dry etching for the removal of the material not covered by said covering mask;

the method being characterised in that the dry etching step repeatedly alternates a deposition of a passivation layer, a dry etching with isotropic plasma, and a cleaning of the starting substrate, thus leading to the formation of micro-structures (2) or holes with side walls at least partially nano-patterned, showing projections (14) and recesses (16) alternated with a predetermined distance.

8. The method according to the claim 7, characterised in that it comprises manufacturing a covering mask complementary to said grid, such that the step b) leads to obtain a micro-structured surface with holes complementary to the surface of the device intended to be manufactured, and wherein said complementary micro-structured surface is used as a mould for micromoulding of a biocompatible polymeric material.

9. The method according to claim 7, wherein said covering mask is of the type i) and the material susceptible of etching is silicon.

10. The method according to claim 9, further comprising the step of applying to the silicon, at the end of the dry etching step, a biocompatible coating and possibly an adhesion layer for said biocompatible coating.

11. The method according to claim 10, further comprising the step of applying, on the biocompatible coating, a hydrophobic polymeric coating layer having thicknesses such as not to modify the device superficial biocompatibility.

12. The method according to claim 7, wherein the passivation layer is a polymeric layer obtained by polymerisation of octafluorocyclobutane (C_4Fg) and the dry etching with isotropic plasma is performed using sulphur hexafluoride.

13. The use of a device according to any of the claims 1 to 6, for obtaining suspended cells not adherent to the substrate (1).

14. The use according to claim 13, comprising the steps of:

- coating said device with a cell-adhesion promoting material;
- depositing on the so-coated device a predetermined number of cells in a single drop of a predetermined growth medium;
- leaving the cells in incubation;
- removing the growth medium and replacing it with a predetermined amount of maintenance medium.

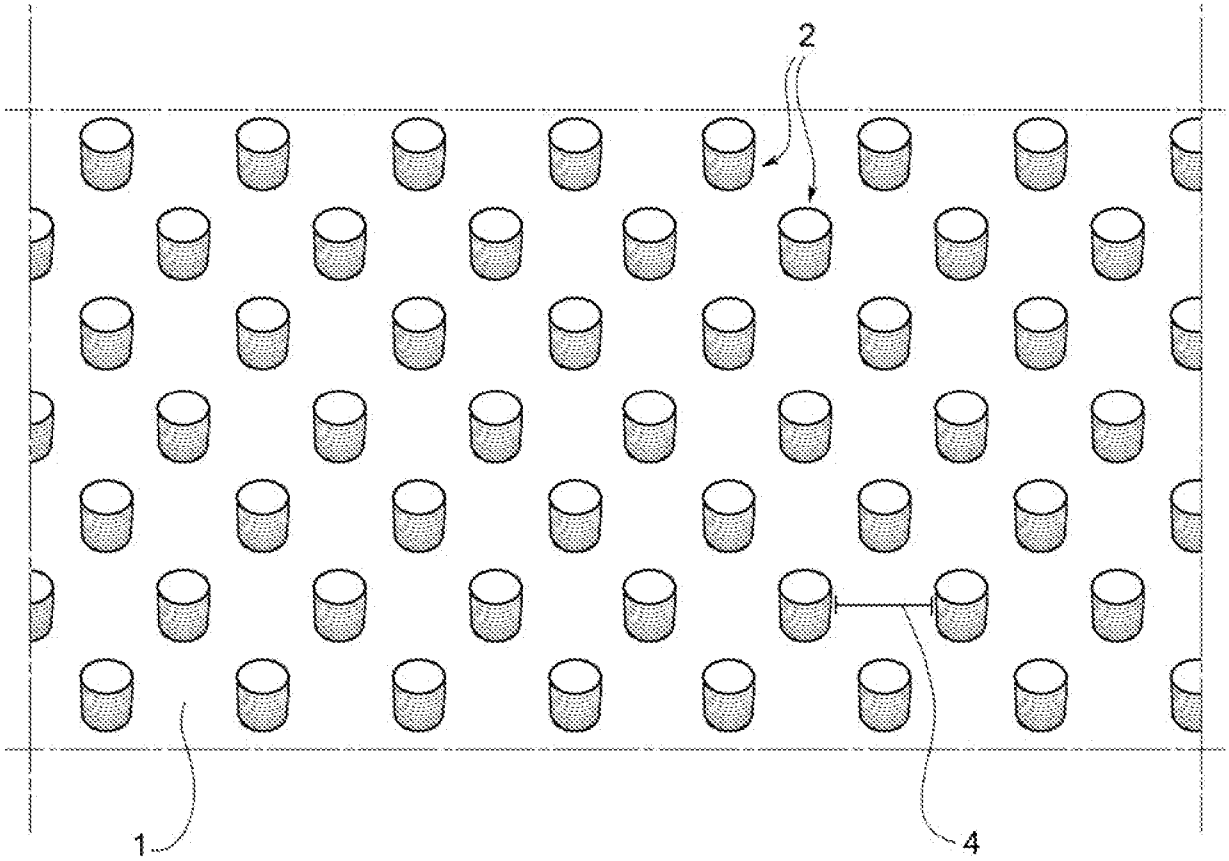

FIG. 1

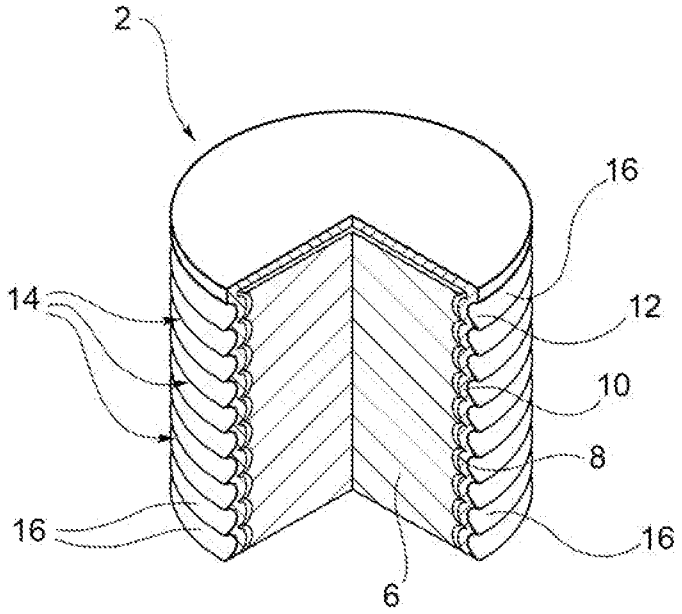

FIG. 2

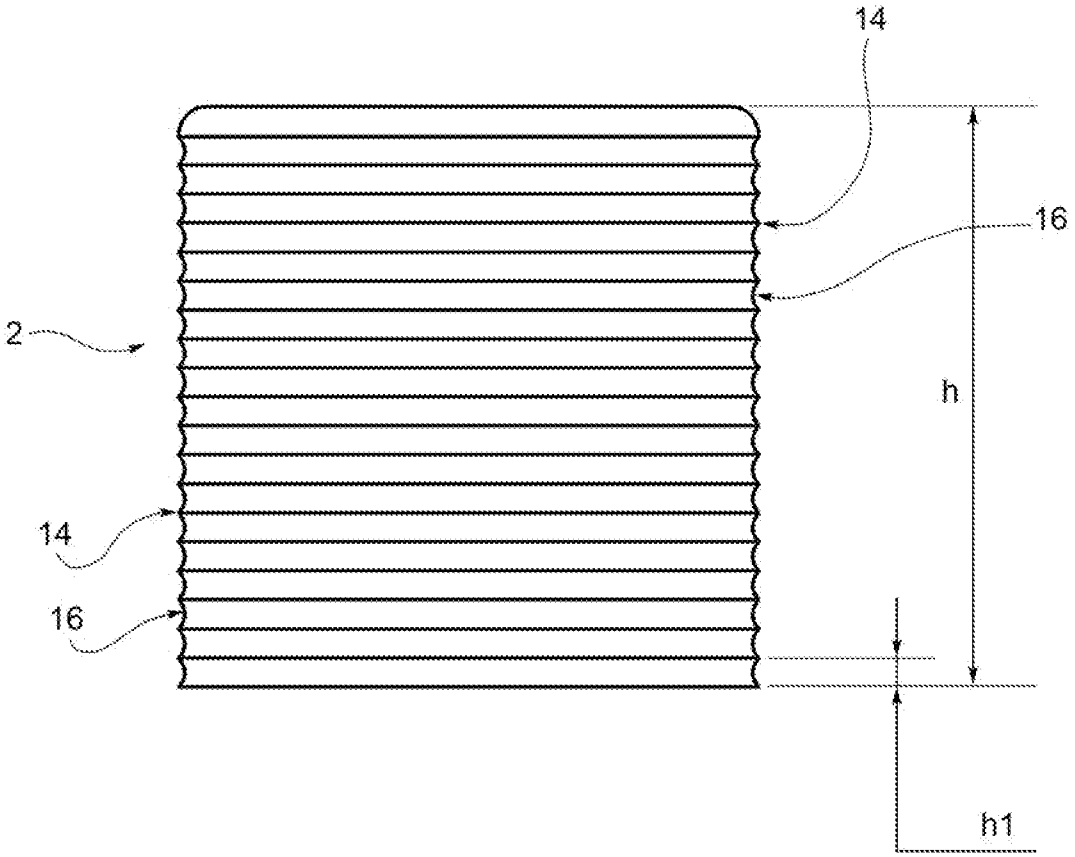

FIG. 3

INTERNATIONAL SEARCH REPORT

International application No
PCT/IB2013/053041

A. CLASSIFICATION OF SUBJECT MATTER
INV. BO1L3/00 B08B17/0O C12M1/34
ADD.

According to International Patent Classification (IPC) or to both national classification and IPC

B. FIELDS SEARCHED

Minimum documentation searched (classification system followed by classification symbols)
C12M B01L

Documentation searched other than minimum documentation to the extent that such documents are included in the fields searched

Electronic data base consulted during the international search (name of data base and, where practicable, search terms used)

EPO-Internal , WPI Data, BIOSIS, EMBASE

C. DOCUMENTS CONSIDERED TO BE RELEVANT

Category*	Citation of document, with indication, where appropriate, of the relevant passages	Relevant to claim No.
X	DE 10 2009 037011 B3 (HELMHOLTZ ZENT B MAT & ENERG [DE]] 12 May 2011 (2011-05-12) paragraphs [0001] , [0002] , [0004] - [0007] , [0010] , [0011] , [0015] - [0017] , [0022] claims -----	1,7, 13
X	WO 2010/023635 AI (CALMED S R L [IT] ; DI FABRIZIO ENZO MARIO [IT] ; CUDA GIOVANNI [IT] ; ME) 4 March 2010 (2010-03-04) cited in the application page 2 - page 3 figure 1 -----	1,7

-/-

[X] Further documents are listed in the continuation of Box C.

[X] See patent family annex.

* Special categories of cited documents :

"A" document defining the general state of the art which is not considered to be of particular relevance

"E" earlier application or patent but published on or after the international filing date

"L" document which may throw doubts on priority claim(s) orwhich is cited to establish the publication date of another citation or other special reason (as specified)

"O" document referring to an oral disclosure, use, exhibition or other means

"P" document published prior to the international filing date but later than the priority date claimed

"T" later document published after the international filing date or priority date and not in conflict with the application but cited to understand the principle or theory underlying the invention

"X" document of particular relevance; the claimed invention cannot be considered novel or cannot be considered to involve an inventive step when the document is taken alone

"Y" document of particular relevance; the claimed invention cannot be considered to involve an inventive step when the document is combined with one or more other such documents, such combination being obvious to a person skilled in the art

"&" document member of the same patent family

Date of the actual completion of the international search	Date of mailing of the international search report
3 July 2013	10/07/2013

Name and mailing address of the ISA/	Authorized officer
European Patent Office, P.B. 5818 Patentlaan 2 NL - 2280 HV Rijswijk Tel. (+31-70) 340-2040, Fax: (+31-70) 340-3016	Bohm, Ingo

INTERNATIONAL SEARCH REPORT

International application No
PCT/IB2013/053041

C(Continuation). DOCUMENTS CONSIDERED TO BE RELEVANT

Category*	Citation of document, with indication, where appropriate, of the relevant passages	Relevant to claim No.
A	A. RANELLA; M. BARBEROGLOU: "Tuning cell adhesion by controlling the roughness and wettability of 3D micro(nano silicon structures", ACTA BIOMATERIALIA, vol. 6, 18 January 2010 (2010-01-18), pages 2711-2720, XPQ0269133Q, page 2711 - page 2712 page 2714 - page 2715 -----	1,13
X	ROACH P ET AL: "Progress in superhydrophobic surface development", 1 January 2Q08 (2008-01-01), SOFT MATTER, R S C PUBLICATIONS, GB, PAGE(S) 224 - 240, XP002558612, ISSN: 1744-683X [retrieved on 2007-10-30] pages 224,225 pages 231-232 pages 234,237 -----	1,7
A	W0 2005/005679 A2 (NAN0SYS INC [US]; DUBR0W ROBERT [US]) 20 January 2005 (2005-01-20) paragraphs [0007], [0021], [0037], [0039] claims; figures -----	1,7, 13
A	US 2011/250376 Al (ARIA ADRIANUS I [US] ET AL) 13 October 2011 (2011-10-13) paragraphs [0033], [0036], [0049] -----	1,7, 13
A	ROSA DI MUND0; ROBERTO GRISTINA: "Mcro-/Nanoscale Structuring of cell culture substrates with fluorocarbon plasmas", PLASMA, PROCESSES AND POLYMERS, vol. 7, 27 September 2009 (2009-09-27), pages 212-223, XP002691331, page 215 - page 216 -----	1,7, 13
A	TAKAHIR0 ISHIZAKI; NAGAHIR0 SAIT0: "Correlation of cell adhesive behaviour on superhydrophobic, superhydrophilic, and micropatternd superhydrophobic/superhydrophilic surfaces in their surface chemistry", LANGMUIR ARTICLE, vol. 26, no. 11, 2 April 2010 (2010-04-02), pages 8147-8154, XP002691332, page 8147 - page 8149 -----	1,7, 13

-/--

INTERNATIONAL SEARCH REPORT

International application No
PCT/IB2013/053041

C(Continuation). DOCUMENTS CONSIDERED TO BE RELEVANT

Category*	Citation of document, with indication, where appropriate, of the relevant passages	Relevant to claim No.
A	MANHUI SUN ET AL: "Arti f i cial Lotus Leaf by Nanocasting" , LANGMUI R, AMERICAN CHEMICAL SOCI ETY, NEW YORK, NY; US , vol . 21, no. 19 1 January 2005 (2005-01-01) , 1 January 2005 (2005-01-01) , pages 8978-8981, XP002667652, ISSN : 0743-7463, D0I : 10. 1021/LA050316Q Retri eved from the Internet: URL: http://pubs.acs.org/doi/abs/10. 1021/1 a 050316q [retri eved on 2005-08-16] page 8978 - page 8980 -----	1,7, 13

INTERNATIONAL SEARCH REPORT

Information on patent family members

International application No
PCT/IB2013/053041

Patent document cited in search report			Publication date	Patent family member(s)			Publication date
DE	102009037011	B3	12-05-2011	NONE			
WO	2010023635	AI	04-03-2010	CA	2735547	AI	04-03-2010
				CN	102292158	A	21-12-2011
				EP	2326420	AI	01-06-2011
				JP	2012500992	A	12-01-2012
				US	2011188037	AI	04-08-2011
				W0	2010023635	AI	04-03-2010
W0	2005005679	A2	20-01-2005	AU	2004256392	AI	20--01--2005
				CA	2522866	AI	20--01--2005
				EP	1618223	A2	25--01--2006
				JP	4871726	B2	08--02--2012
				JP	2007512211	A	17--05--2007
				US	2005181195	AI	18--08--2005
				US	2011240595	AI	06--10--2011
				WO	2005005679	A2	20--01--2005
US	2011250376	AI	13-10-2011	US	2011250376	AI	13-10-2011
				W0	2011127207	A2	13-10-2011