POLITECNICO DI TORINO
Repository ISTITUZIONALE

Articulated Steering Control for an All-Terrain Tracked Vehicle

Original
Articulated Steering Control for an All-Terrain Tracked Vehicle / Tota, A.; Galvagno, E.; Velardocchia, M.; Rota, E.; Novara, A.. - STAMPA. - 91:(2021), pp. 823-830. (Intervento presentato al convegno Proceedings of the 3rd International Conference of IFToMM Italy tenutosi a Naples, Italy nel 9-11 September 2020) [10.1007/978-3-030-55807-9_91].

Availability:
This version is available at: 11583/2845604 since: 2022-04-18T11:00:20Z

Publisher:
Springer

Published
DOI:10.1007/978-3-030-55807-9_91

Terms of use:

This article is made available under terms and conditions as specified in the corresponding bibliographic description in the repository

Publisher copyright
Springer postprint/Author's Accepted Manuscript

This version of the article has been accepted for publication, after peer review (when applicable) and is subject to Springer Nature's AM terms of use, but is not the Version of Record and does not reflect post-acceptance improvements, or any corrections. The Version of Record is available online at: http://dx.doi.org/10.1007/978-3-030-55807-9_91

(Article begins on next page)

12 October 2024

Articulated Steering Control for an All-Terrain Tracked Vehicle

Antonio Tota[1], Enrico Galvagno[1], Mauro Velardocchia[1], Emanuele Rota[2] and Andrea Novara[2]

[1] Politecnico di Torino, Italy
antonio.tota@polito.it
[2] ARIS SpA, Italy

Abstract. The objective of this study is to analyse and control the cornering behaviour of an Articulated All-Terrain Tracked Vehicle (ATV). The ATV is characterized by two units connected through a mechanical multiaxial joint designed to overcome extreme longitudinal and side slopes. The hydraulic actuation of the joint enables an articulated steering feature thus avoiding any thrusts adjustment as it happens for skid-steering vehicles. A direct curvature controller is presented for analysing the steady-state ATV behaviours through a nonlinear model. Furthermore, a hitch angle controller is introduced to overcome the necessity of a curvature feedback measurement. The methodology is verified by simulating typical manoeuvres adopted for evaluating vehicle handling performance.

Keywords: Autonomous Tracked Vehicle, Hitch Angle Controller, Articulated steering Control.

1 Introduction

The cornering behavior of tracked vehicles have peculiar characteristics that differentiate them from wheeled vehicles. The steering operation of these vehicles can be accomplished through different mechanisms: skid-steering and steering by articulation. In skid steering, a turning yaw moment is obtained by applying a different longitudinal thrust force between left and right track sides [1, 2]. For tracked vehicles with two or more units, the steering operation may be achieved by a relative yaw rotation between units through a specific mechanism on connecting joints. This solution is also preferred to the skid steering since it does not require a thrusts adjustment between the outside and inside tracks so that the resultant forward thrust can be maintained during a turning maneuver as shown in [3].

The articulated steering is usually accomplished by installing a hydraulic power steering system able to provide the power required to overcome vehicle lateral resistances arising during cornering. An overview about handling performances of wheeled truck-trailer vehicles is presented in [4]. Few similar studies are also available in literature about tracked articulated vehicles: the effect of towing a passive trailer on a wagon-type tracked vehicle steer-ability is analyzed in [5]. Most of tracked articulated

vehicles are usually adopted for rescue and emergency operations due to their off-road and all terrain attitudes. Recently, more interest is arising in their remote control to avoid any dangerous implications for a conventional human driving: the authors of [6] show that a real time estimation of soil parameters is essential in achieving precise, robust autonomous guidance and control of a tracked vehicle. Different control architectures are proposed to overcome the snaking mode or to improve steering response of an articulated steer vehicle [7, 8].

Within this context, the paper presents a study related to the articulated tracked vehicle already introduced by [9]. The research activity aims to describe the vehicle handling characteristics and to provide useful specifications for designing a remote or autonomous curvature controller. Firstly, a non-linear mathematical model of the ATV is presented in Section 2, by also including the effect of hydraulic steering dynamics by adopting the same methodology used in [10-13]. The ATV cornering behavior is then analyzed by applying a direct curvature controller where the tractor curvature is supposed to be available for feedback implementation in Section 3. To overcome the drawbacks of a direct curvature controller, a model-based hitch angle controller is designed and verified in Section 4. Finally, some conclusions are drawn in Section 5.

2 Model Description

The ATV analyzed in this activity is characterized by a bi-modular structure: a first unit includes a 170 HP internal combustion engine and a 6-speed automatic transmission; the second unit fulfills the task of goods and persons transportation. The engine torque is equally distributed among the four sprocket wheels, two for each unit, by means of three open differentials. The weight of each unit is distributed through 8 road wheels, 4 for each unit side, which are connected to the hull through specific swing-arm torsional suspensions. The steering operation is obtained through a hydraulic system which can apply a relative yaw angle, the so-called hitch angle.

The ATV behavior is analyzed through a non-linear model described in [9]. The model includes 8 degrees of freedom: longitudinal, lateral and yaw motion of both units and 4 rotations for each sprocket wheel. The free body diagram used to derive the ATV model equations of motion is shown in Fig. 1.

The two units are considered as rigid bodies with mass m_1, m_2 and mass moment of inertia around vertical axis passing through the respective center of gravity I_{G1}, I_{G2}. The road is considered rigid and the track is modeled as four contact points for each track. (a_{x1}, a_{y1}) and (a_{x2}, a_{y2}) are respectively the front and rear unit longitudinal and lateral acceleration components. (u_1, v_1) and (u_2, v_2) are respectively the front and rear unit longitudinal and lateral velocity components. Front and rear velocity vectors are inclined of $\beta_1$and β_2 with respect to their corresponding longitudinal directions. ψ_1 and ψ_2 are the yaw angles of the front and rear units respectively. $\alpha = \psi_1 - \psi_2$ represents the hitch angle between the two ATV units.

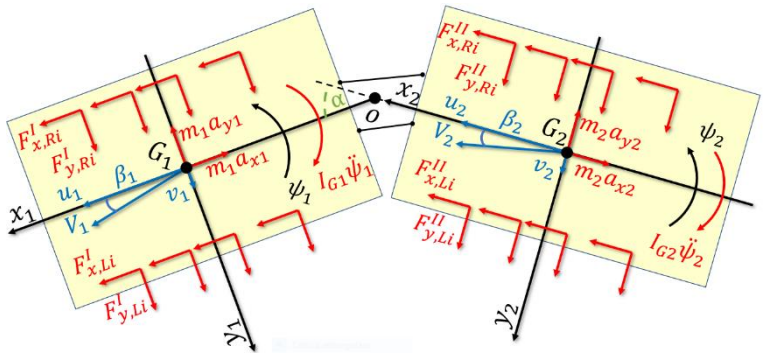

Fig. 1. Free body diagram of ATV (top view)

The continuous track-terrain contact is discretized into a finite number of contact patches equal to the number of road wheels [14]. Longitudinal $F^k_{x,ji}$ and lateral forces $F^k_{y,ji}$ are exchanged with the road, referred to the $i_{th} = 1{:}N_w$ road wheel on the left/right ($j = L/R$) side of the front $k_{th} = I$ and rear $k_{th} = II$ units. Each contact patch force component is modeled as a hyperbolic tangent function of their longitudinal slip ratio σ^k_{ji} and slip angle β^k_{ji}.

$$
\begin{aligned}
F^k_{xj,i} &= k_\beta \underbrace{(a_{1x}F^k_{zj,i} + a_{2x})}_{\mu_x} F^k_{zj,i} \tanh \frac{3\sigma^k_{j,i}}{\sigma_{max}} \\
F^k_{yj,i} &= k_\sigma \underbrace{(a_{1y}F^k_{zj,i} + a_{2y})}_{\mu_y} F^k_{zj,i} \tanh \frac{3\beta^k_{j,i}}{\beta_{max}}
\end{aligned}
\tag{1}
$$

μ_x and μ_y are the global longitudinal and lateral friction coefficients respectively. $F^k_{zj,i}$ is the vertical force on each road wheel and considers the static weight distribution among the road wheels and the load transfer induced by lateral acceleration. The coefficients a_{1x}, a_{2x} and a_{1y}, a_{2y} are introduced to consider variation of longitudinal and lateral stiffness with respect to the vertical load. The peak longitudinal and lateral forces occur at σ_{max} and at β_{max} respectively. k_β and k_σ coefficients are also adopted to consider the longitudinal/lateral combined slips influence. Advanced track-terrain models able to correlate the tractive effort to soil properties are well known in the literature [15, 16] but a basic model with the lowest possible number of parameters is preferred for the sake of simplicity.

The hydraulic steering system, shown in Fig. 2, is composed by a pump powered by the diesel engine, and two proportional valves designed to regulate the flow rate towards two double-acting cylinders whose piston rod forces generate a steering torque C_s to each ATV unit, equal in amplitude but with opposite sign.

The two piston rods are hinged on the second unit in points A and B meanwhile the two hydraulic cylinders case are hinged on the first unit in points C and D. The relative yaw rotation occurs around point O and rods length AD and BC are function of relative

angle: for positive α, the BC length is extended meanwhile AD is shortened with respect the configuration of Fig. 2.

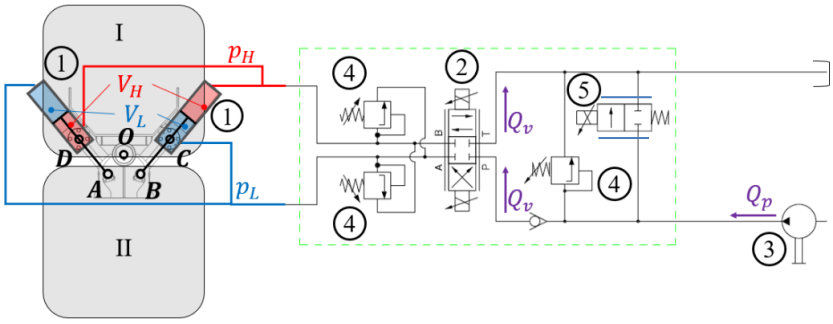

Fig. 2. Hydraulic steering system 1- Double-acting cylinders; 2- Double-solenoid flow rate proportional valve; 3- Pump; 4- Pressure relief valves; 5- Single-solenoid flow rate proportional valve.

The fixed displacement pump (number 3 in Fig. 2) generates the flow rate Q_p which is splitted between a double solenoid and a single solenoid proportional valves (number 2 and 5 respectively in Fig. 2). The flow rate Q_v (regulated through the position of solenoid valves spool) towards the high-pressure cylinders chambers with equivalent volume V_H (red circuit) is assumed to be equal to the flow rate withdrawn from the low pressure cylinders chambers with volume V_L (blue circuit). The dynamic behavior of the pressure difference between high pressure and low-pressure cylinders chambers $\Delta p = p_H - p_L$ is then calculated by:

$$\frac{d\Delta p}{dt} = \dot{p}_H - \dot{p}_L = \beta_{oil}\left(\frac{Q_v - \dot{V}_H}{V_H}\right) - \beta_{oil}\left(\frac{-Q_v - \dot{V}_L}{V_L}\right) \tag{2}$$

where β_{oil} is the oil bulk modulus. Volumes V_H, V_L and their time derivatives are geometrically correlated to the hitch angle by considering the piston rods length variation. The hydraulic steering torque C_s is then generated by the cylinder piston forces multiplied by their respective lever arms f:

$$C_s = \Delta p\left(2A_p - A_s\right)f - c_O\dot{\alpha} \tag{3}$$

where A_p and A_s are the bore and piston rod areas respectively, c_O is a viscous damping coefficient to consider the damping contributions from the joint O bushing and from oil in hydraulic cylinders.

3 ATV Cornering Response

The ATV model described in Sect. 2 represents a useful tool for studying the ATV dynamic and steady-state behavior during a turning maneuver. The flow rate Q_v is the unique quantity that can be regulated to modify the ATV trajectory. As initial

hypothesis, the curvature ρ_1 of the ATV first unit is supposed to be available for introducing a direct curvature controller through the following feedback law:

$$Q_v = K_{p,\rho}\left(\rho_{ref} - \rho_1\right) \tag{4}$$

where $K_{p,\rho}$ is a proper proportional gain. During a step steering maneuver, the reference curvature ρ_{ref} is ramped up to the maximum value achievable with ATV physical constraints (minimum turning radius of 6.5 m due to mechanical end stops). ATV cornering behavior is then analyzed through the quantities shown in Fig. 3.

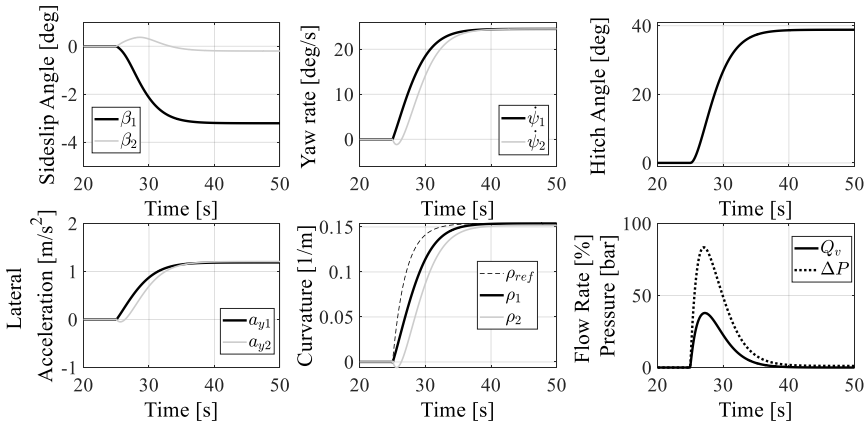

Fig. 3. Sideslip angle, yaw rate, hitch angle, lateral acceleration, curvature, flow rate percentage and pressure difference between hydraulic cylinder chambers during a step steering maneuver with direct curvature controller application at constant ATV speed $u_1 = 10$ km/h.

The maneuver is characterized by an initial transient phase where proportional flow rate valve opens the passage from the pump to high pressure chamber and from the low pressure chamber to the tank, thus generating a pressure difference Δp and a steering torque C_s acting on both ATV units. The hydraulic proportional valve is then smoothly closed when the vehicle is approaching towards a steady-state condition characterized by a constant hitch angle and pressure difference between the cylinder chambers. Moreover, it is evident a clear sign inversion of rear unit quantities which is mainly related to the kinematic conditions imposed by the ideal hinge O: at the beginning of the steering, the yaw motion of the front unit geometrically imposes an opposite yaw rotation to the rear unit through the hinge constraint. Furthermore, yaw rates, lateral accelerations and curvatures tends to the same steady-state values, in fact the ATV is behaving as a unique rigid body with a locked hinge between the two units.

The steady-state behavior is further analyzed by executing constant-radius maneuvers (steering pad) where the speed is smoothly increased until the maximum vehicle lateral acceleration is reached. Some simulation results are shown in Fig. 4 where the reference curvature is set at three different values.

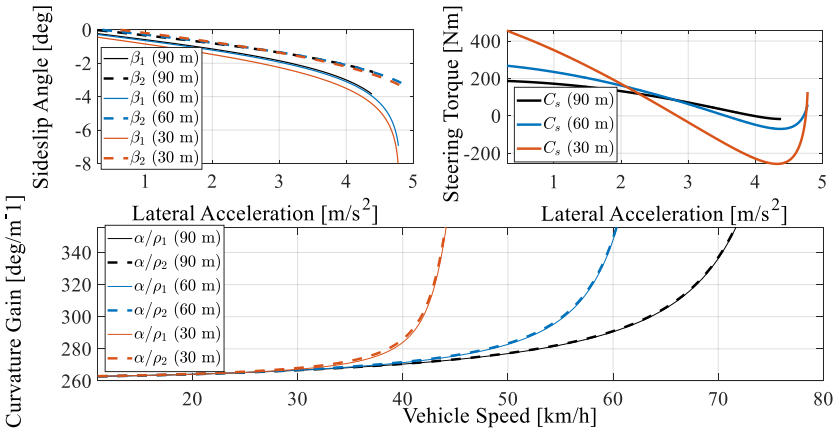

Fig. 4. Top: Sideslip angle and steering torque vs lateral acceleration; Bottom: Hitch angle gains vs ATV speed during a steering pad maneuver at constant radius of 90 m (black), 60 m (blue) and 30 m (red).

The direct curvature controller can keep the desired constant radius until the saturation of the track-road forces does not allow any further increase of lateral acceleration. This is visible in the asymptotic behavior of sideslip angles when the maximum lateral acceleration is approached at the end of the steering pad maneuver. The steering torque decreases with lateral acceleration and strongly depends on the curvature radius as well as vehicle speed. The ATV steady-state hitch angle gains $G_{\rho 1} = \alpha/\rho_1$ and $G_{\rho 2} = \alpha/\rho_2$ are also shown in the bottom side of Fig. 4. At low ATV longitudinal speeds, all hitch angle gains linearly increase with the speed with no influence by the curvature radius: thus the vehicle curvature can be directly regulated through the hitch angle. For high speeds, the hitch angle gain tends to an asymptote, therefore the vehicle maneuverability is lost and cannot be controlled anymore because the track-road forces saturation leads to a lateral ATV sliding motion.

4 Hitch Angle Controller

The direct curvature control introduced in the previous section requires that at least the curvature of the front unit is measured or estimated to implement the feedback law in Eq. 4 which is not always a feasible solution. On the other hand, the hitch angle can be easily measured or directly obtained by the position measurements of hydraulic cylinder pistons. The direct curvature control can be then replaced by a hitch angle controller where the ATV actual curvature feedback is not required:

$$Q_v = K_{p,\alpha}\left(\alpha_{ref} - \alpha\right) = K_{p,\alpha}\left(\rho_{ref} G_{\rho 1} - \alpha\right) \tag{5}$$

where $K_{p,\alpha}$ is a proper proportional gain and $G_{\rho 1}$ is obtained from Fig. 4 as function of vehicle speed and reference curvature. The hitch angle controller is then verified by

imposing a double step signal to the reference curvature ρ_{ref}. Results are shown in Fig. 5.

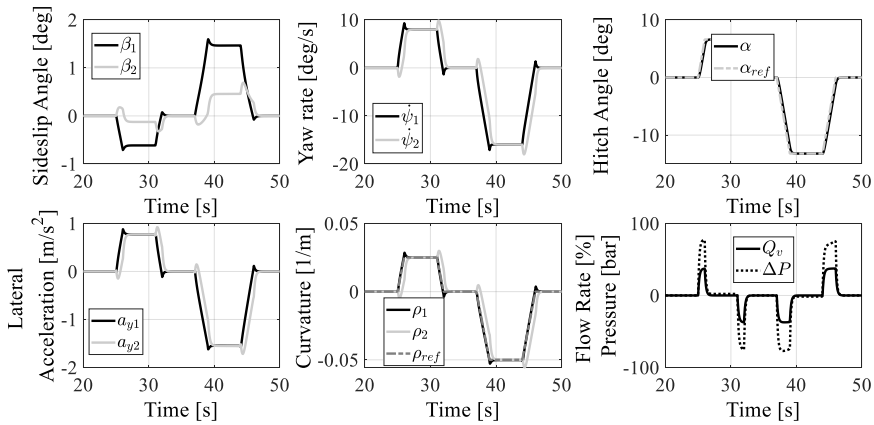

Fig. 5. Sideslip angle, yaw rate, hitch angle, lateral acceleration, curvature, flow rate percentage and pressure difference between hydraulic cylinder chambers during a double curvature step maneuver with hitch angle controller at constant ATV speed $u_1 = 20$ km/h.

A first curvature radius of 40 m counterclockwise is requested to the controller, followed by a second lower radius step of 20 m clockwise. In this case, the front unit's curvature perfectly follows the reference signal even if no curvature is feed backing for elaborating the flow rate Q_v. The rear unit curvature differs from the reference only during the transient part of the maneuver. This is something expected since the inversion of yaw rate, sideslip angle and lateral acceleration signs is geometrically imposed by the hinge O.

5 Conclusions

The ATV non-linear mathematical model, described in the present activity, represents a promising tool for analyzing and controlling its cornering behavior. The following conclusions are drawn from simulation results:

- The ATV behaves as a unique rigid body (hinge O locked) when a steady-state condition, i.e. constant turning radius, is approached.
- A linear ATV behavior is observed during a steering pad maneuver, before the track-terrain forces saturates at high lateral accelerations.
- The gain between path curvature and hitch angle linearly increases with ATV speed until a vertical asymptote is reached at high lateral accelerations: the hitch angle represents an alternative quantity for controlling vehicle curvature that can be easily measured.
- A hitch angle controller is introduced to prove that a desired curvature can be tracked without a direct feedback of ATV units curvature.

Future investigations are necessary to study the effect of the hitch angle controller on ATV transient behavior even in presence of vehicle properties variations (i.e. mass, terrain conditions, engine torque distribution).

6 References

1. B. Maclaurin: A skid steering model with track pad flexibility. In: Journal of Terramechanics, vol. 44, no. 1, pp. 95–110, (2007)
2. T. D. Thai and T. Muro: Numerical analysis to predict turning characteristics of rigid suspension tracked vehicle. In: Journal of Terramechanics, vol. 36, no. 4, pp. 183–196 (1999)
3. K. Watanabe and M. Kitano: Study on steerability of articulated tracked vehicles-part 1. theoretical and experimental analysis. In: Journal of Terramechanics, vol. 23, no. 2, pp. 69–83, (1986)
4. F. Vlk: Handling performance of truck–trailer vehicles: A state–of–the–art survey. In: International Journal of Vehicle Design, vol. 6, no. 3, pp. 323–361, (1985)
5. F. F. Alhimdani: Steering analysis of articulated tracked vehicles. In: Journal of Terramechanics, vol. 19, no. 3, pp. 195–209, (1982)
6. A. T. Le, D. C. Rye, and H. F. Durrant-Whyte: Estimation of track-soil interactions for autonomous tracked vehicles. In: Proceedings of International Conference on Robotics and Automation, vol. 2, pp. 1388–1393, IEEE, (1997)
7. N. L. Azad, A. Khajepour, and J. McPhee: Stability control of articulated steer vehicles by passive and active steering systems. In: tech. rep., SAE Technical Paper, (2005)
8. Y. Gao,Y. Shen, T.Xu,W. Zhang, and L. Güvenç: Oscillatory yawmotion control for hydraulic power steering articulated vehicles considering the influence of varying bulk modulus. In: IEEE Transactions on Control Systems Technology, vol. 27, no. 3, pp. 1284–1292, (2018)
9. A. Tota, M. Velardocchia, E. Rota, and A. Novara: Steering behavior of an articulated amphibious all-terrain tracked vehicle. In: tech. rep., SAE Technical Paper, (2020)
10. A. Tota, E. Galvagno, M. Velardocchia, and A. Vigliani: Passenger car active braking system: Model and experimental validation (part i). In: Proceedings of the Institution of Mechanical Engineers, Part C: Journal of Mechanical Engineering Science, vol. 232, no. 4, pp. 585–594, (2018)
11. A. Tota, E. Galvagno, M. Velardocchia, and A. Vigliani: Passenger car active braking system: Pressure control design and experimental results (part ii). In: Proceedings of the Institution of Mechanical Engineers, Part C: Journal of Mechanical Engineering Science, vol. 232, no. 5, pp. 786–798, (2018)
12. E. Galvagno, A. Tota, A. Vigliani and M. Velardocchia: Pressure Following Strategy for Conventional Braking Control Applied to a HIL Test Bench. In: SAE International Journal of Passenger Cars-Mechanical Systems, vol. 10, pp. 721-727, (2017)
13. E. Galvagno, A. Tota, A. Vigliani and M. Velardocchia: Enhancing Transmission NVH Performance through Powertrain Control Integration with Active Braking System. In: SAE Technical Paper, (2017)
14. E. Galvagno, E. Rondinelli, and M. Velardocchia: Electro-mechanical transmission modelling for series-hybrid tracked tanks. In: International Journal of Heavy Vehicle Systems, vol. 19, no. 3, pp. 256–280, (2012)
15. M. G. Bekker: Theory of land locomotion. In: University of Michigan Press, (1956)
16. J. Y. Wong: Terramechanics and off-road vehicle engineering: terrain behaviour, off-road vehicle performance and design. Butterworth-heinemann, (2009)