POLITECNICO DI TORINO
Repository ISTITUZIONALE

The Dual-Rasp Sampling System for an Enceladus Lander

Original
The Dual-Rasp Sampling System for an Enceladus Lander / Backes, Paul; Moreland, Scott; Badescu, Mircea; Riccobono, Dario; Brinkman, Alex; Choukroun, Mathieu; Molaro, Jamie; Aggerwal, Rajan; Newbold, Timothy; Ahmad, Adeel; Ubellacker, Samuel. - ELETTRONICO. - (2020). (Intervento presentato al convegno IEEE Aerospace Conference 2020 tenutosi a Big Sky (Montana, USA) nel 7-14 Marzo 2020) [10.1109/AERO47225.2020.9172462].

Availability:
This version is available at: 11583/2847859 since: 2020-10-15T16:19:20Z

Publisher:
IEEE

Published
DOI:10.1109/AERO47225.2020.9172462

Terms of use:

This article is made available under terms and conditions as specified in the corresponding bibliographic description in the repository

Publisher copyright

(Article begins on next page)

12 October 2024

The Dual-Rasp Sampling System for an Enceladus Lander

Paul Backes[1], Scott Moreland[1], Mircea Badescu[1], Dario Riccobono[1,2], Alex Brinkman[1], Mathieu Choukroun[1], Jamie Molaro[3], Rajan Aggerwal[1], Timothy Newbold[1], Adeel Ahmad[1], Samuel Ubellacker[1]

[1]Jet Propulsion Laboratory
California Institute of Technology
4800 Oak Grove Dr.
Pasadena, CA 91109
paul.g.backes@jpl.nasa.gov

[2]Politecnico Di Torino, Department of Mechanical and Aerospace Engineering
Corso Duca degli Abruzzi 24
10129 Torino (Italy)
dario.riccobono@polito.it

[3] Planetary Science Institute
1700 E Fort Lowell Rd #
106, Tucson, AZ 85719
jmolaro@psi.edu

Abstract—**The Dual-Rasp sampling system has been developed for the unique sampling environment of a lander mission to the surface of Saturn's moon Enceladus. Plume material from the subsurface ocean that has fallen to the surface is desired resulting in an objective to sample the topmost layer of icy material. The low gravity and potential large range of surface properties are challenges for the sampling system. The Dual-Rasp sampling system has two counter-rotating rasp cutters with teeth that remove material that is thrown up between the cutters. Two prototypes of the Dual-Rasp sampling system were built and tested, one with a carousel and one that uses pneumatics for sample transfer.**

TABLE OF CONTENTS

1. INTRODUCTION 1
2. DUAL-RASP SAMPLING 2
3. CAROUSEL SAMPLE MEASUREMENT AND TRANSFER 2
4. PNUEMATICS-BASED SAMPLE MEASUREMENT AND TRANSFER 3
5. SAMPLE SYSTEM PROTOTYPES 5
6. PARTICLE TRANSPORT TESTING 6
7. DISCUSSION AND FUTURE WORK 7
ACKNOWLEDGEMENTS 7
REFERENCES 7
BIOGRAPHY 8

1. INTRODUCTION

The novel Dual-Rasp sampling system has been developed for the unique sampling environment of a lander mission to the surface of Saturn's moon Enceladus. Observations from the Cassini mission suggest that Enceladus has a subsurface ocean which contains ingredients to sustain life including hydrothermal vent energy sources and necessary chemical elements [1-7]. Enceladus has continuously erupting ice plumes that eject material from the subsurface liquid ocean out of surface vents. Some of the material contributes to Saturn's rings while some of the material falls back to the surface. The surface material has the potential to include evidence of life in the subsurface ocean if it exists there [8.9]. The benign radiation environment of the Enceladus surface would allow surface material to be preserved. A lander mission that collects and analyzes the surface material has the potential to discover evidence of life in the Enceladus subsurface ocean.

It is desired that a sampling system would acquire only very shallow surface material in the top 1cm since this would be the freshest plume material that has fallen to the surface. To account for a wide range of potential surface material strengths, the sampling system was developed to be able to sample from surface material between 400kPa and 12MPa CPT (cone penetration test) strength and 40-95% porosity [10,11]. The low 1% Earth gravity environment limits the allowable reacted load from the sampling activity to a lander which results in an objective to limit reacted loads to the lander to less than 8N [12].

Various sampling techniques were evaluated, including a piezoelectric actuated scoop and drive tube concepts [12]. Further analysis of the piezoelectric actuated scoop in Enceladus gravity conditions indicated that there would be risk of the particles bouncing away from the scoop during sample acquisition and out of the scoop during the sample transfer process due to arm accelerations. Also, a higher strength surface material would require a higher preload for the piezoelectric scoop concept. The primary concern with the drive tube concepts was the ability to acquire sample from strongest material, e.g. 12MPa unconfined compressive strength (UCS). The potentially strong material precludes the use of sampling tools that only work for weak material such as the TAGSAM sampler of the OSIRIS-REx mission [13]. The low 8N reacted force objective precludes use of sampling tools that require higher reacted loads such as the Mars Science Laboratory powder drill (300N preload) [14]. The BiBlade developed for comet surface sampling and Brush Wheel Sampler developed for asteroid surface sampling were designed for higher reacted loads that are available in a touch-and-go mission architecture where spacecraft mass reacts sampling forces [15]. The Rosetta mission Philae lander rotary drill, SD2, would only acquire weak material and as a drill would be poorly suited for collecting surface material [16].

2. DUAL-RASP SAMPLING

A robotic arm would deploy a Dual-Rasp sampler to a surface for sampling (Figure 1). The Dual-Rasp sampler has counter-rotating rasp cutting heads (Figure 2). Rasp-type cutting heads can acquire material from hard icy surfaces, as utilized in the Mars Phoenix mission [17]. The same cutting head can acquire loose material. The Brush-wheel sampler [18] used counter-rotating brushes to acquire loose material and throw the material up between them into a collection chamber. The Dual-Rasp combines these concepts to provide a sampling system that can acquire material from loose to high strength and throw the material in a controlled path for collection. The rasp-based sampling approach is able to acquire strong material with low reaction loads.

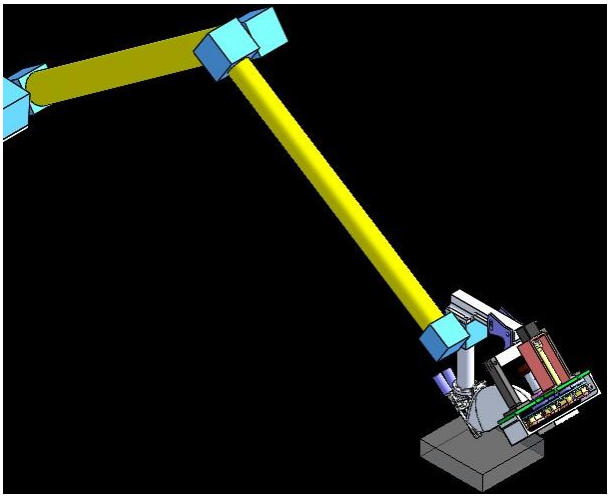

Figure 1. A robotic arm deploys the Dual-Rasp to a surface for sampling.

Figure 2. Two counter-rotating rasp cutting heads extract sample from the surface and throw the material up between them.

The dual cutters acquire the sample and throw it up between them where it flows through a guide to a collection chamber and is subsequently measured for quantity and transferred to science instruments. The sample collection process is shown in Figure 3. Two concepts were developed for transfer to science instruments: carousel and pneumatic.

The guide is an ellipsoid-shaped structure designed to direct the material flow towards the inlet of the collection cup. The ellipsoidal shape was selected because of the geometrical property of focusing the material thrown in any direction from one focal point (i.e. the Dual-Rasp tip) to the other (i.e. the inlet of the collection cup). This phenomenon was investigated by performing numerical simulations of the material flow based on the Discrete Element Method (DEM). The goal was characterizing the material flow in terms of spatial dispersion, velocity distribution and interaction between the material particles and the surface of the guide. Results of such an investigation were adopted for designing the guide.

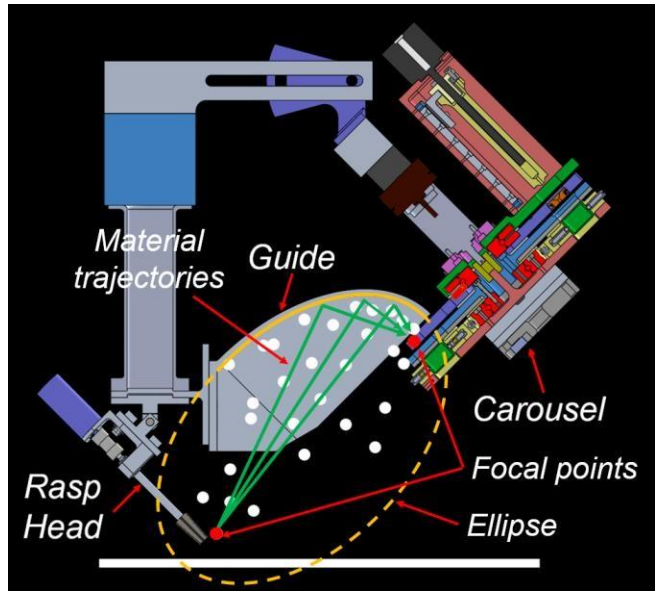

Figure 3. Sample material follows a guide into a collection chamber. The carousel capture and transfer concepts are shown here.

3. CAROUSEL SAMPLE MEASUREMENT AND TRANSFER

The carousel approach for sample measurement and transfer has ten sample cups on a carousel attached at the end a robotic arm (Figure 4). The current version of the tool has 5cc sample cups. During the sampling process, material is thrown up between the cutters and follows the guide to a sample cup. Extra material flows out of the cup and back into the environment. After sampling is complete, the carousel rotates to position the sample cup under a plunger. A lid is indexed at the cup location under the plunger. The plunger is driven down by a linear actuator to push the lid into the cup and into contact with the sample (Figure 5). Contact is detected with a load cell or actuator currents. The lid position indicates the volume of the material in the cup. If the volume is not sufficient, then the cup can be rotated back to the sampling location and another sampling activity can be executed followed by the same process of rotating the cup under the plunger and pushing another lid

into the cup for sample measurement. Spare lids are included to enable multiple sampling activities per cup.

When a sample volume is sufficient, the robotic arm transports the sampler with carousel to a docking port on the lander (Figure 6). After docking, the plunger pushes down on the last lid in the cup and the cup breaks free of the carousel and into the inlet port of a science instrument (Figure 7). The sample cup is perforated or porous to enable wet chemistry sample analysis.

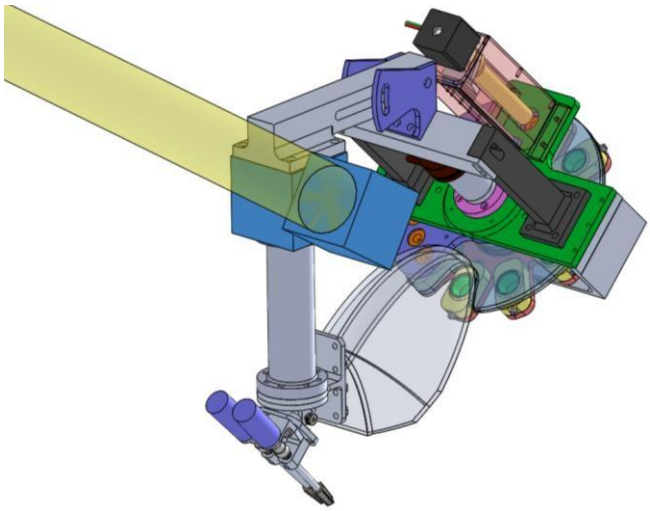

Figure 4. A robotic arm deploys the Dual-Rasp to a surface for sampling.

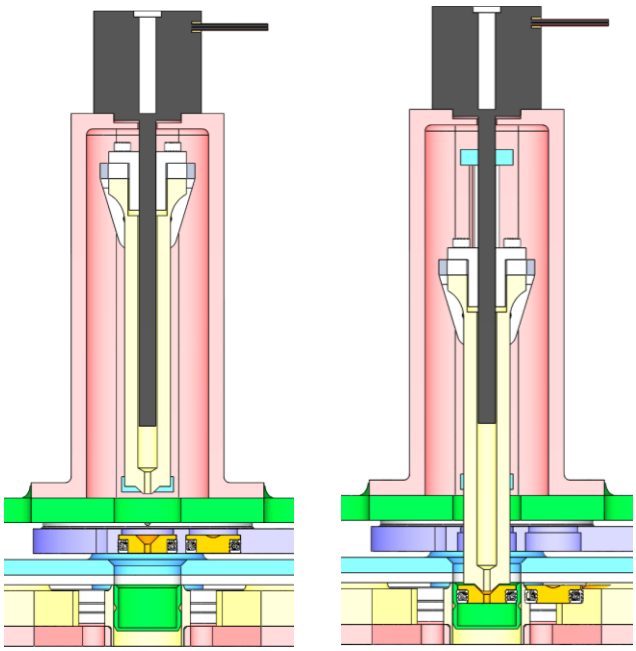

Figure 5. Plunger pushing a lid on a sample cup for sample retention and measurement.

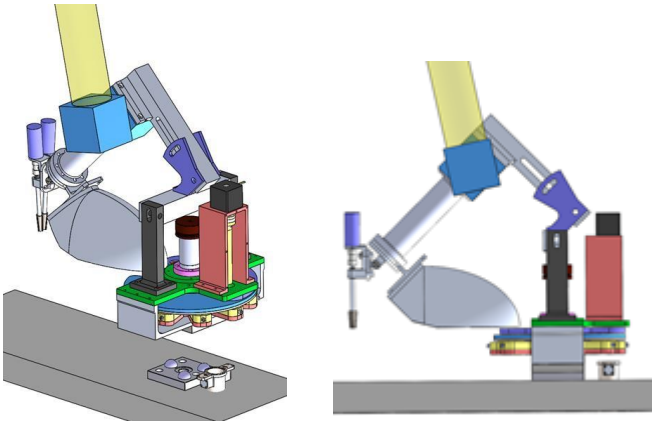

Figure 6. Docking carousel to lander deck to enable transfer to sample cup through science instrument inlet port into science instrument chamber.

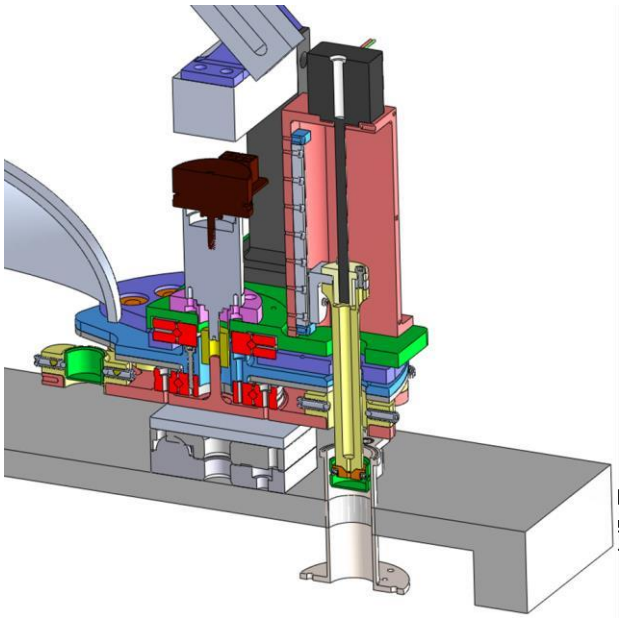

Figure 7. Cross-section showing carousel and plunger at sample transfer location.

4. Pneumatics-based Sample Measurement and Transfer

A pneumatics-based sample measurement and transfer approach was also developed. A pneumatic particle transport model was adopted for designing the system, according to [19]. The pneumatics system uses the same dual rasp sampling and sample guide approach to acquire the sample and guide it into a sample capture volume (Figure 8). The sample capture volume is larger than for the carousel concept and there is only one reusable sample capture volume. A sample capture volume door is open during the sampling activity (Figure 8).

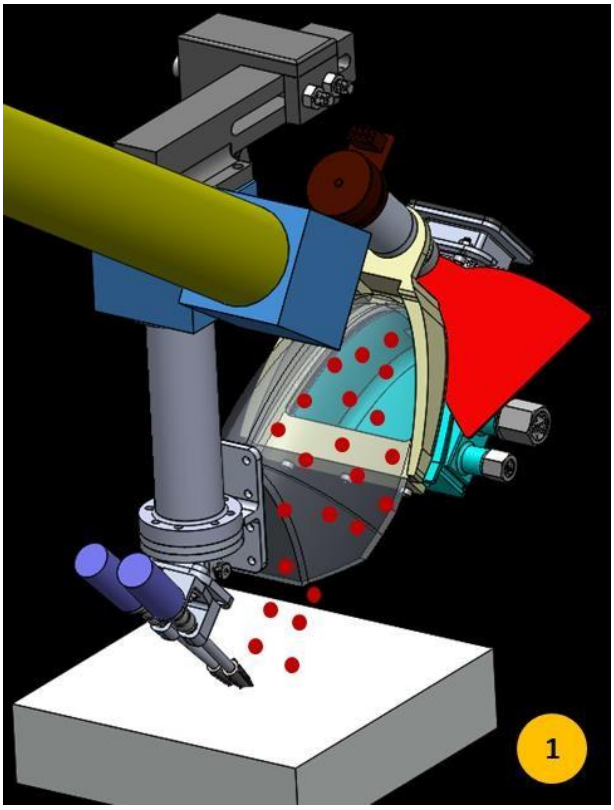

.

Figure 8. Sample acquisition for the pneumatics-based Dual-Rasp tool concept. Sample is acquired with the dual rasp cutters and follows a guide into a sample collection chamber. The sample collection chamber door is open during the sample acquisition activity.

In a low gravity environment like the Enceladus surface, it is a challenge to confine the sample inside the collection cup. Sample particles could easily collide with the inner surfaces, then exiting the collection volume. For this reason, DEM was again adopted for investigating potential strategies for sample capture. A promising strategy relies on creating physical barriers to limit the degrees of freedom of the particles and reduce their kinetic energy by increasing the probability of mutual collisions. A grid built into the sample collection chamber was devised for this purpose and its effectiveness was preliminarily verified by numerical simulations, as shown in Figure 9. A prototype is expected to be tested.

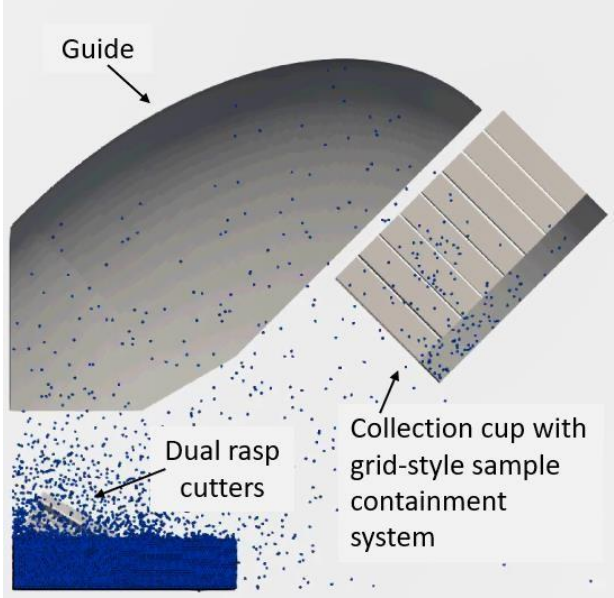

Figure 9. Discrete Element Method simulation result of sample particle containment using grid structure in sample collection chamber.

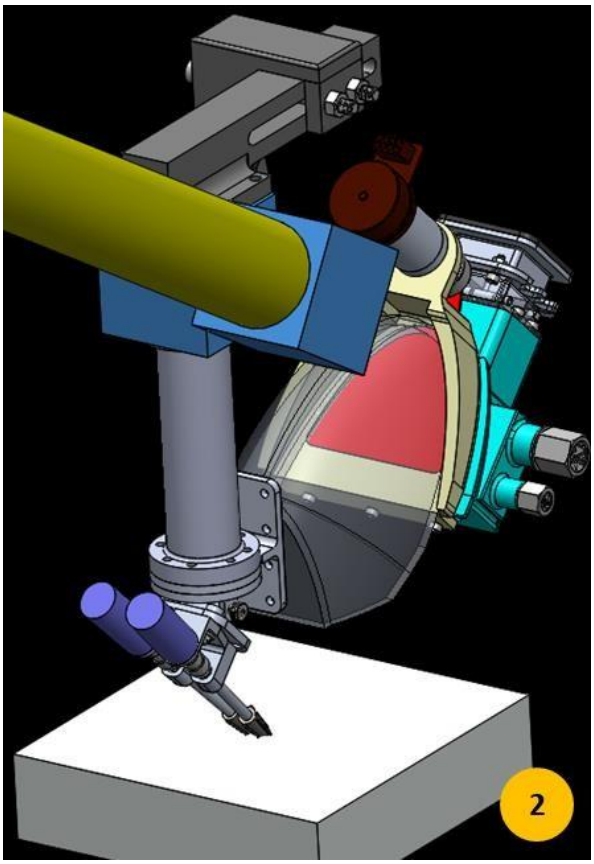

Figure 10. Sample collection chamber door is closed after sampling.

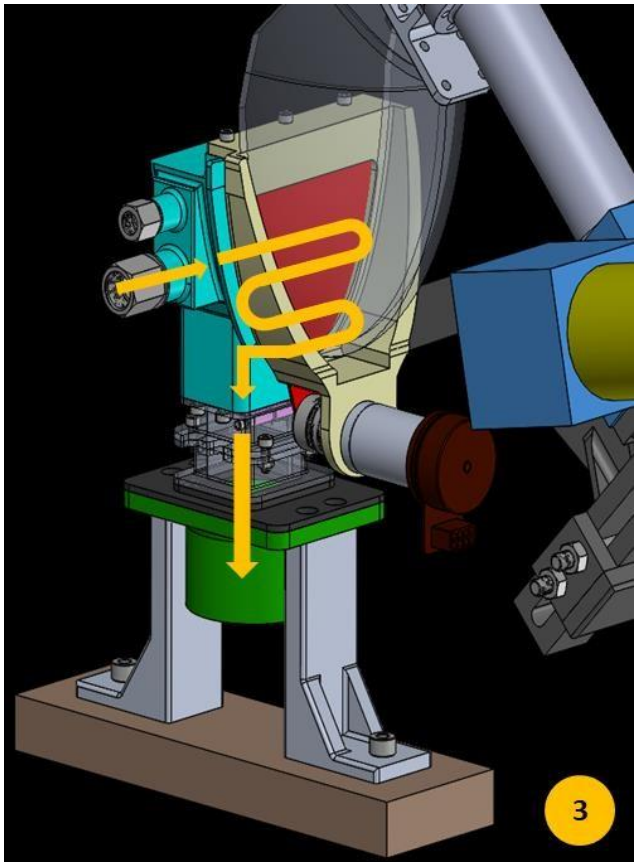

Figure 11. After docking with an instrument port on the lander deck, gas flows through the sample capture volume to transport it through a science instrument inlet port and into a science instrument sample chamber.

After sample acquisition is completed, the sample volume door would be closed (Figure 10). The robotic arm would transport and dock the tool on the lander. The docking process would engage a connection to a gas tube. A valve would release gas to flow through the tube and into the sample collection chamber where it would mix with the sample and then transport the sample through a tube and into a science instrument chamber (Figure 11). The sample measurement concept currently under development is to measure the flow rate of sample material as it flows through the tube on its way to the science instrument sample chamber. A microwave sensor approach is being evaluated for sample measurement.

5. SAMPLE SYSTEM PROTOTYPES

Prototypes of the carousel and pneumatic transfer Dual-Rasp sampling systems were built and tested. The carousel version is shown in Figure 12 and above a loose material simulant in Figure 13. The carousel version was used successfully in an end-to-end process demonstration of sample acquisition, measurement, and sample cup transfer to a science instrument sample processing chamber.

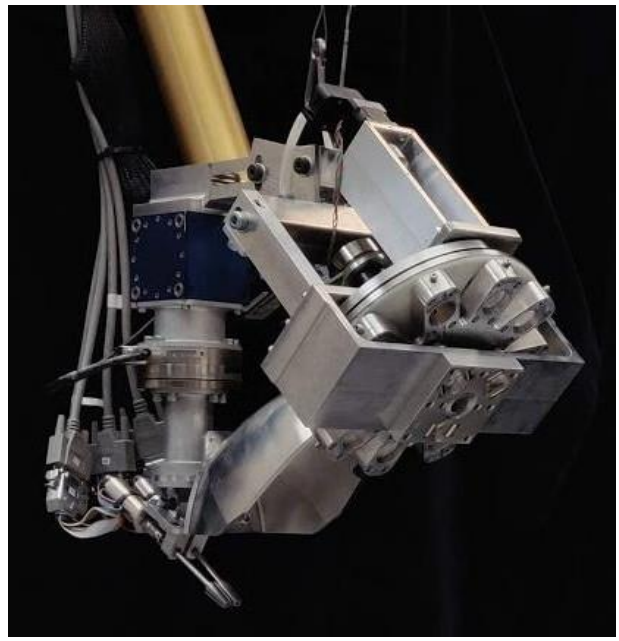

Figure 12. Dual-Rasp sampling system with carousel for sample measurement and transfer to science instrument sample chamber.

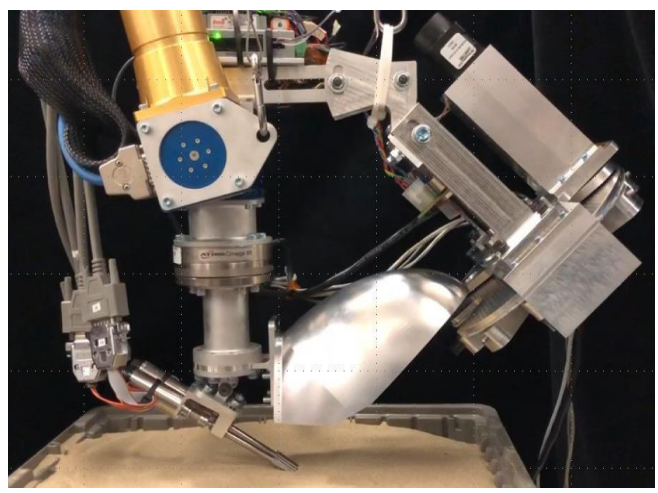

Figure 13. Dual-Rasp sampling system with carousel above loose material simulant.

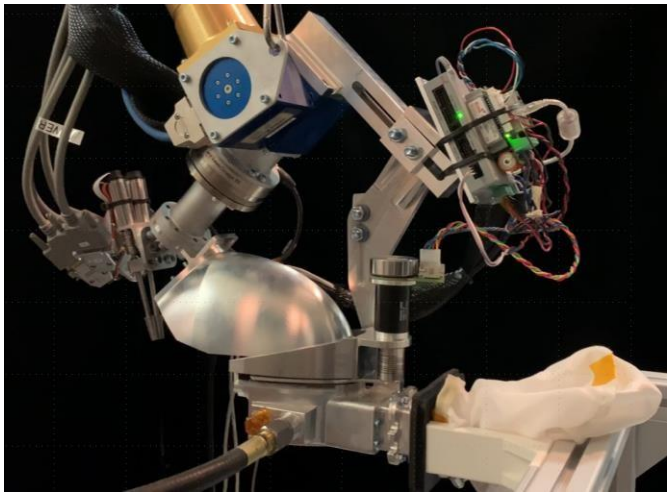

Figure 14. Pneumatics transfer prototype of the Dual-Rasp sampling system.

The pneumatics version of the Dual-Rasp sampling system is shown in Figure 14 in the docked configuration for sample transfer. For testing, a pressurized tank of air was used and sample was successfully captured into a bag. The baseline concept for depositing sample into a science instrument sample chamber is for the sample-carrying gas to flow into the science instrument sample chamber and then out through a filter. The filter would cause the sample to remain in the chamber as the gas exits through the filter. A prototype filter in a clear wall chamber is shown in Figure 15. The pneumatic version of the sampling system was tested and demonstrated to collect sample and transfer it to a science instrument processing chamber.

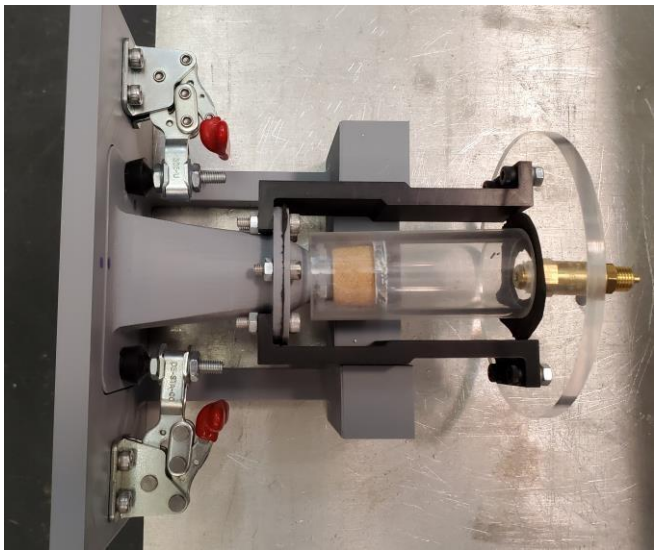

Figure 15. Prototype filter in science instrument sample chamber connected to a docking port.

6. PARTICLE TRANSPORT TESTING

Particle transport from the surface to the sample chamber will have significant differences in the 1% Earth gravity and vacuum conditions of the Enceladus surface compared to laboratory ambient conditions. A particle transport model was developed to predict particle transport behavior in the Enceladus surface environment. A vacuum chamber was developed to validate the particle transport model in vacuum conditions but in Earth gravity, as shown in Figure 16. Initial tests in 0.05 atm and 1 atm air pressure are shown in Figures 17 and 18. The Dual-Rasp cutters generate about 10 µm size particles that are thrown up between them. As expected, the fine particles are dispersed in the 1 atm lab ambient conditions but flow more directly to the collection guide in the 0.05 atm conditions.

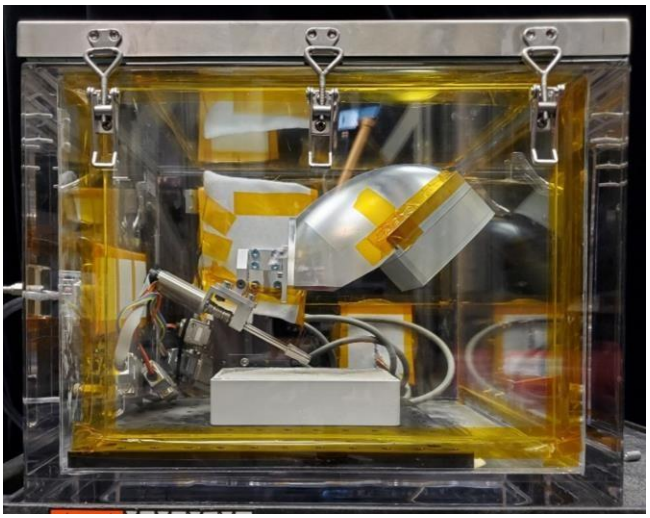

Figure 16. Vacuum chamber and test setup for particle transport model validation.

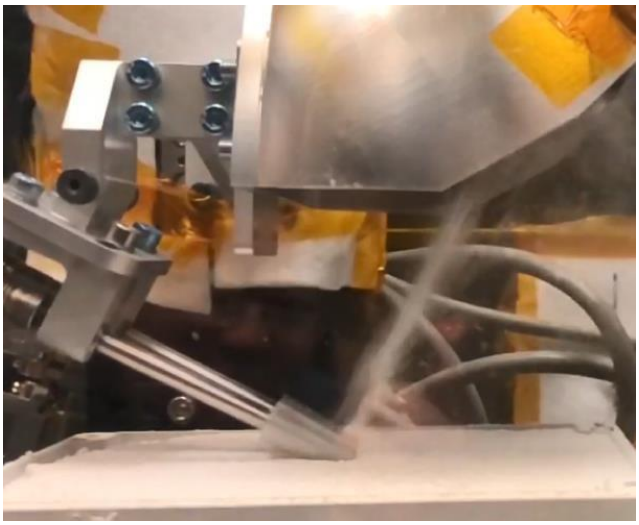

Figure 17. Sample transport of approximately 10µm particles in 0.05 atm conditions.

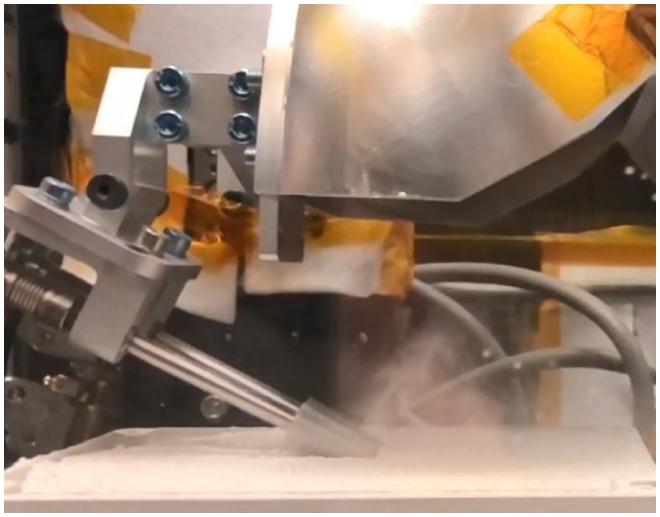

Figure 18. Sample transport of approximately 10µm particles in 1 atm conditions.

7. Discussion and Future Work

Testing with the prototypes of the carousel and pneumatic versions of the Dual-Rasp sampling system demonstrated the potential for the concepts for Enceladus surface sampling. The carousel version has the benefit of direct sample measurement and all components of the system have been demonstrated. The carousel version limits the number of samples to the number of sample cups on the carousel and the sample volume is limited to the size of sample cups that can fit on a carousel. The pneumatic transfer version has the benefit of amount of sample collected only limited by the gas supply needed for sample transport, and it potentially has lower mechanical complexity. The sample measurement approach for the pneumatic version has not been developed and validated but a microwave sensor based flow sensor is being investigated that has good potential for measurement of the sample volume. On-going work has plans for development of the sampling system to higher technology readiness.

Acknowledgements

Research reported in this paper was conducted at the Jet Propulsion Laboratory (JPL), California Institute of Technology under a contract with National Aeronautics Space Administration (NASA).

References

[1] Waite, J.H., Combi, M.R., Ip, W.H., Cravens, T.E., McNutt, R.L., Kasprzak, W., Yelle, R., Luhmann, J., Niemann, H., Gell, D. and Magee, B., 2006. Cassini ion and neutral mass spectrometer: Enceladus plume composition and structure. science, 311(5766), pp.1419-1422.

[2] Waite Jr, J.H., Lewis, W.S., Magee, B.A., Lunine, J.I., McKinnon, W.B., Glein, C.R., Mousis, O., Young, D.T., Brockwell, T., Westlake, J. and Nguyen, M.J., 2009. Liquid water on Enceladus from observations of ammonia and 40 Ar in the plume. Nature, 460(7254), p.487.

[3] Postberg, F., Schmidt, J., Hillier, J., Kempf, S. and Srama, R., 2011. A salt-water reservoir as the source of a compositionally stratified plume on Enceladus. Nature, 474(7353), p.620.

[4] Waite, J.H., Glein, C.R., Perryman, R.S., Teolis, B.D., Magee, B.A., Miller, G., Grimes, J., Perry, M.E., Miller, K.E., Bouquet, A. and Lunine, J.I., 2017. Cassini finds molecular hydrogen in the Enceladus plume: evidence for hydrothermal processes. Science, 356(6334), pp.155-159.

[5] Postberg, F., Kempf, S., Schmidt, J., Brilliantov, N., Beinsen, A., Abel, B., Buck, U. and Srama, R., 2009. Sodium salts in E-ring ice grains from an ocean below the surface of Enceladus. Nature, 459(7250), p.1098.

[6] McKay, C.P., Porco, C.C., Altheide, T., Davis, W.L. and Kral, T.A., 2008. The possible origin and persistence of life on Enceladus and detection of biomarkers in the plume. Astrobiology, 8(5), pp.909-919.

[7] McKay, C.P., Anbar, A.D., Porco, C. and Tsou, P., 2014. Follow the plume: The habitability of Enceladus. Astrobiology, 14(4), pp.352-355.

[8] Spitale, J.N. and Porco, C.C., 2007. Association of the jets of Enceladus with the warmest regions on its south-polar fractures. Nature, 449(7163), p.695.

[9] Porco, C.C., Dones, L. and Mitchell, C., 2017. Could it be snowing microbes on Enceladus? Assessing conditions in its plume and implications for future missions. Astrobiology, 17(9), pp.876-901.

[10] Choukroun, M., Phelps, E.S., Molaro, J.L., Hodyss, R., Mitchell, K.L., "Sintering of fine-grained porous water ice: preliminary investigation of microstructure and strength evolution." American Geophysical Union poster, December 2018.

[11] Molaro, J.L., Choukroun, M., Phillips, C.B., Phelps, E.S., Hodyss, R., Mitchell, K.L., Lora, J.M., and Meirion-Griffith, G., 2019. "The microstructural evolution of water ice in the solar system through sintering", Journal of Geophysical Research (Planets). 124, 243-277.

[12] Badescu, M., Backes, P., Moreland, S., Brinkman, A., Riccobono, D., Dotson, M., Csomay-Shanklin, N., Ubellacker, S., Molaro, J., Choukroun, M., Genta, G., Sampling tool concepts for Enceladus lander in-situ analysis, IEEE Aerospace Conference, March 3-9, 2019.

[13] Beshore, E., et al., The OSIRIS-REx asteroid sample return mission, IEEE Aerospace Conference, Big Sky (Montana, USA), 2015.

[14] Jandura L., et al., Collecting samples in Gale Crater, Mars; an overview of the Mars Science Laboratory sample acquisition, sample processing and handling system, Space Science Reviews 170 (1-4), 2012

[15] Moreland, S., Backes, P., Badescu, M., Riccobono, D., Mongelli, M., Viera, P., Brinkman, A., Rehnmark, F., Wei, R., Adams, G., Toda, R., Cervantes, W., Zacny, K., Full-scale dynamic touch-and-go validation of the BiBlade comet surface sample chain." IEEE Aerospace Conference, March 3-10, 2018.

[16] Finzi et al., "SD2 - How to Sample a Comet," Space Science Reviews (2007) 128: 281-299.

[17] Bonitz, R., et al., "NASA Mars 2007 Phoenix Lander robotic arm and icy soil acquisition device." Journal of Geophysical Research, 2008, vol.113.

[18] Bonitz, R., "The brush wheel sampler - a sampling device for small-body touch-and-Go missions," IEEE Aerospace Conference, 2012.

[19] Riccobono, D., Moreland, S., Backes, P., Genta, G. Modelling of pneumatic sample transport systems for Enceladus surface acquisition. 11th IAA Symposium on the Future of Space Exploration, June 17-19, 2019.

BIOGRAPHY

Paul Backes, Ph.D. *is the Group Supervisor of the Robotic Manipulation and Sampling group at Jet Propulsion Laboratory, where he has been since 1987. He received the BSME degree at U.C. Berkeley in 1982 and Ph.D. in ME from Purdue University in 1987. His awards include NASA Exceptional Engineering Achievement Medal (1993), JPL Award for Excellence (1998), NASA Software of the Year Award (2004), IEEE Robotics and Automation Technical Field Award (2008), and NASA Exceptional Service Award (2014).*

Scott Moreland, Ph.D. *received the B.S. degree from University of Toronto and M.S. and Ph.D. degrees in Mechanical Engineering from Carnegie Mellon University and joined JPL in 2013. His expertise is primarily in robotic systems that interact with the ground for mobility or sampling. His experience includes the design and fielding of robotic vehicles, mechanism design, and mechanical systems testing.*

Mircea Badescu, Ph.D. *is a Technologist in the NDEAA lab at JPL. He joined JPL in 2005. He received the Ph.D. degree in robotics in mechanical and aerospace engineering from Rutgers University in 2003. Prior to graduate school he worked for the Romanian Navy on the design of underwater diving equipment. He has experience with power ultrasonic piezoelectric devices, planetary and low gravity sampling systems, extreme environments devices, instruments for planetary exploration, optical components for telescopes, and optimal design of self-reconfigurable robots using parallel platforms as modules.*

Dario Riccobono *received both the B.S. and the M.S. degree in Aerospace and Astronautic Engineering from the Politecnico di Torino (Italy), where he is currently pursuing a Ph.D. in Mechanical Engineering. His primarily expertise is in robotic systems for mobility and sampling. His experience includes mechanical systems analysis, design and testing, as well as space mission analysis and design.*

***Alex Brinkman**, received his B.S. from the University of Illinois Urbana-Champaign and M.S in Robotic Systems Development at Carnegie Mellon in 2017. Alex researches software, controls, and autonomy on a wide variety of manipulator-focused applications from warehouse picking to deep-space planetary sampling systems.*

***Mathieu Choukroun**, Ph.D. is a planetary scientist at the Jet Propulsion Laboratory. He received his Ph.D. in Earth and Planetary Science at Universite de Nantes, France in 2007. His primary research aims at better understanding the exchange processes that take place between the interior and the surface (or atmosphere/coma) of icy worlds and comets. This research involves experimental investigation of the physical and chemical properties of icy materials, and thermodynamic and geophysical modeling of icy worlds and cometary environments to apply the experimental results.*

***Jamie Molaro,** Ph.D. is a planetary scientist at the Planetary Science Institute and the Caltech/Jet Propulsion Laboratory. She received her Ph.D. in Planetary Science from the University of Arizona in 2015. Her research focuses on physical weathering processes and landscape evolution on rocky and icy solar system objects. She employs thermal and mechanical numerical modeling as well as laboratory investigations in her work, and is an expert on the properties of ice/rocks and regolith on airless body surfaces.*