POLITECNICO DI TORINO
Repository ISTITUZIONALE

Microwave Imaging Device for In-Line Food Inspection

Original
Microwave Imaging Device for In-Line Food Inspection / Ricci, Marco; Crocco, Lorenzo; Vipiana, Francesca. - ELETTRONICO. - (2020). (Intervento presentato al convegno 2020 14th European Conference on Antennas and Propagation (EuCAP)) [10.23919/EuCAP48036.2020.9135775].

Availability:
This version is available at: 11583/2836376 since: 2020-06-17T17:48:45Z

Publisher:
IEEE

Published
DOI:10.23919/EuCAP48036.2020.9135775

Terms of use:

This article is made available under terms and conditions as specified in the corresponding bibliographic description in the repository

Publisher copyright
IEEE postprint/Author's Accepted Manuscript

©2020 IEEE. Personal use of this material is permitted. Permission from IEEE must be obtained for all other uses, in any current or future media, including reprinting/republishing this material for advertising or promotional purposes, creating new collecting works, for resale or lists, or reuse of any copyrighted component of this work in other works.

(Article begins on next page)

12 October 2024

Microwave Imaging Device for In-Line Food Inspection

M. Ricci *, L. Crocco † F. Vipiana *
*Dept. of Electronics and Telecommunications, Politecnico di Torino, Torino, Italy,
email: marco.ricci, francesca.vipiana@polito.it
†CNR-IREA, Consiglio Nazionale delle Ricerche, Napoli, Italy,
email: crocco.l@irea.cnr.it

***Abstract*—Foreign body contamination is a key issue in food production and packaging industries. The constant increase of mechanized process chain, the variety of materials employed during the production and the growing consumer awareness about food quality arose the number of complaints in the recent years. Several technologies are applied to ensure that products are free from contaminations, but they may fail in detecting low-density plastic or glass fragments contaminants accidentally present inside food/beverage products. To address this issue, a system exploiting microwave imaging is proposed and assessed in this work. To this end, we designed a system which is capable of monitoring of packaged food along the production line, taking into account the specific and challenging constraints arising in such a scenario. Its design and full characterization with full-wave simulation are reported in the paper. The obtained results set the ground for the realization of the prototype of the system.**

***Index Terms*—microwave imaging, non-invasive diagnostics, food inspection, food security, food safety**

I. Introduction

Contamination by foreign bodies is a key issue for food manufacturing industries: loss of trust in a brand, large expenses for the food lot recall, but especially the potential hazards for consumers health, leading to severe injuries are consequences to be avoided. The constant development of fully automated and mechanized production chain in the recent past led to an increase of potential risks and consequently an increase of complaints too. Existing technologies, such as metal detectors (MD), X-ray (XRI) or near-infrared (NIR) techniques, have still limitations in detection of certain kind of potential contaminants. As such, the occurrence of incidents remains significant, as these technologies are not suitable to simultaneously address all the requirements of food industry.

Also, ultrasound imaging can be difficult to exploit in this context, due to the requirement of current systems of a contact between transducer and sample. Indeed, they are not able to detect low-density plastic or glass fragments, and furthermore their implementation shows drawbacks such as the high cost (XRI) or a limited penetration depth (NIR).

Microwave imaging (MWI) [1] is here investigated for the purpose of a food monitoring system and it is meant as a complementary tool with already adopted technologies, due to its ability to non-invasively penetrate an object and provide a spatial map of its dielectric characteristics, seeking for possible contaminants showing intrinsic dielectric contrast with the contents of the object under investigation.

In the last years there has been an increasing interest concerning the potential of MW imaging for food quality and safety assessment [2]. However, the (limited) literature available on this topic essentially deals with non-imaging devices [3]–[5] intrinsically different from the one herein proposed. The possibility of applying radar-based techniques for food screening has been suggested in [5] only; however, no experiments or simulations were therein given to support the idea.

At industrial level, there is only one MW device for food inspection [4]. This device is applicable for monitoring liquids and emulsions in pipes and it is able to detect foreign objects such as wood, plastic, bone, and fruit stones. The device implements a technique where the measured signal is compared with a reference one and the target detected if the difference is higher than a settled threshold. As such, it is different from the device herein developed, which provides images of the inspected food sample in a much more complex scenario. Additionally, the proposed system is thought to be applied to single food items on a conveyor i.e., to the end-product. This is a major difference, as the packaging step is one of the main causes of introduction of foreign elements in food.

In this work, a cost efficient prototype based on microwave imaging technology (MWI) is proposed, studied to fit and be compliant within an industrial production line without interrupting the process. The proposed MWI system here studied is a challenging scenario. As a matter of fact, the contrast between the food contents and the employed intrusion, a 2 mm radius spherical plastic intrusion is low. Moreover, the need of performing the measurements in-line enforces severe constraints on the number of measurements, the acquisition geometry and calls for ad-hoc solution capable to provide the required imaging results.

II. MWI system architecture and design

The measurement configuration adopted to cope with the scenario at hand consists in a set of six antennas arranged in a gallery-shaped architecture thought to fit in the industrial line and still let the object pass through without being stopped.

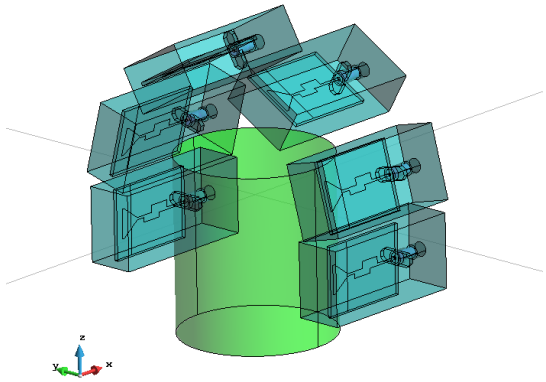

Fig. 1. Antenna array positions with respect to the food product under investigation.

Figure 1 shows the 3-D design of the system with the implemented antennas that are printed monopoles. The antennas number, position and orientation have been designed through the rigorous procedure based on SVD of the discretized scattering operator, similar to the one used for other MWI devices for medical applications [6]. The aim is to obtain a multi-view of the object by combining all possible interactions between the 30 antennas pairs, piloted by a switching system that guides and enables the active antennas in transmission and reception for each measurement time slot.

The chosen frequency is 10 GHz, as a trade-off between sufficient penetration depth within foods like creams which are typically hosted in jars, and resolution. In this respect the requirement is that the device has to be able to detect millimetrical sized contaminants.

The simulated scenario consists in a cylindrical jar, whose base has a 3.3 cm radius and its height is 7.5 cm, containing hazelnut-cocoa cream, in which a spherical intrusion of 2 mm radius is placed. The complete measurement generates a 6 $\times$ 6 scattering matrix comprehending all the possible combinations among different antennas; this matrix is then compared with the one measured for an "ideal" case, in which the jar is uncontaminated. The distorted-Born approximation is assumed to be viable owing to the low contrast between the inclusion and the surrounding medium. Accordingly, the resulting differential scattering matrix can be considered as being only affected by the intrusion, and will be appraised by the device provided its strength overcomes the noise level.

According to the above, the imaging problem at hand can be modeled through the following linear integral equation,

$$\Delta S(r_p, r_q) = \frac{-j\omega\epsilon_b}{4} \int_D E_b(r_p, r) E_b(r, r_q) \Delta\chi(r)\, dr = L(\Delta\chi) \tag{1}$$

where D is the domain of interest, p and q are respectively the transmitting and receiving sources, $\Delta\chi$ is the contrast due to the contaminant, E_b is the total field for the reference scenario considered without the intrusion, and L is the linear scattering operator relating the differential scattering matrix with the unknown $\Delta\chi$ [6], [7].

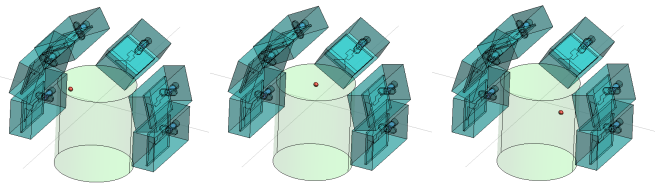

(a) Position 1 (b) Position 2 (c) Position 3

Fig. 2. Three of the considered cases varying contaminant position in the jar.

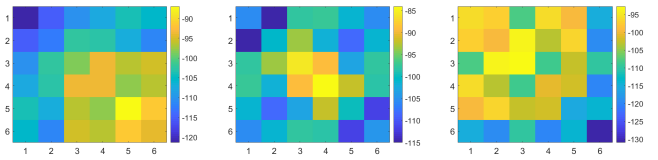

(a) Position 1 (b) Position 2 (c) Position 3

Fig. 3. The differential scattering matrix for the three considered cases [dB].

The tomographic image is then obtained by computing the Truncated Singular Value Decomposition (TSVD) [8] of the reference scenario, and projecting onto it the obtained differential data.

III. Numerical results

A. Imaging of static target

This section describes the considered scenario and shows some of the results obtained by reconstructing the tomographic image. The chocolate cream relative dielectric constant used in the simulation has been actually measured with a probe and it is $\epsilon_{r,c} = 2.86$ while its conductivity is $\sigma_c = 0.21\ S/m$; the 2 mm plastic intrusion has a permittivity $\epsilon_{r,i} = 3.2$, simulating a PET sphere, so presenting as already stated a really low dielecric contrast. The reported dielectric values are at the considered frequency of 10 GHz.

The spherical intrusion has been moved around the target jar in several positions at different heights, in order to validate the model for arbitrary locations of the contaminant. Some contaminant position examples are shown in Figure 2.

Figure 3 shows the differential scattering matrices for each case, due to the effect of the contaminant only; using these data, and applying the TSVD algorithm, it is possbile to obain a 3-D reconstruction for the considered volume. Figure 4 shows a planar cut of the reconstructions at the heights in which the intrusions have been positioned respectively in the three shown cases. It is evident that the peaks in the images correspond to the positions of the contaminant, here presented as black spheres for reference, in both side (Figures 4a and 4c) and central positions (Figure 4b). A distortion along the x axis is due to the lack of antennas along that direction, as expected.

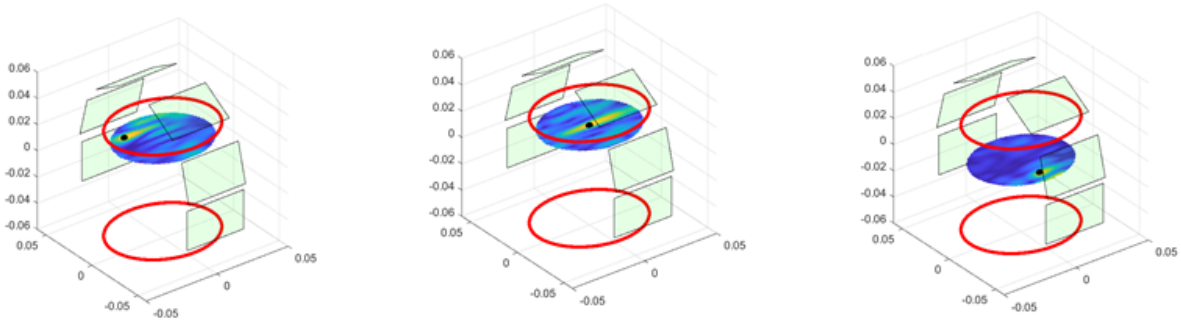

(a) Position 1 (b) Position 2 (c) Position 3

Fig. 4. Planar cut of image reconstructions for the three considered cases.

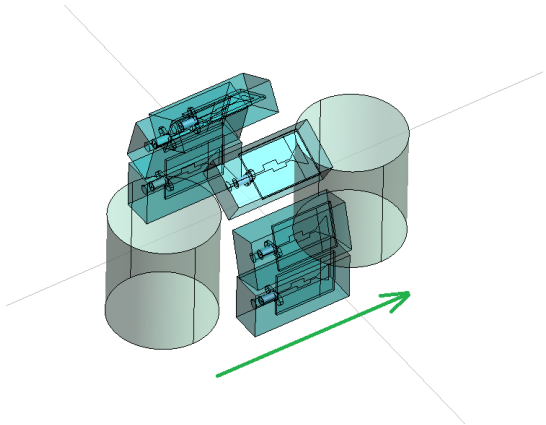

Fig. 5. Initial and final positions for the virtual motion of the jar along the line direction.

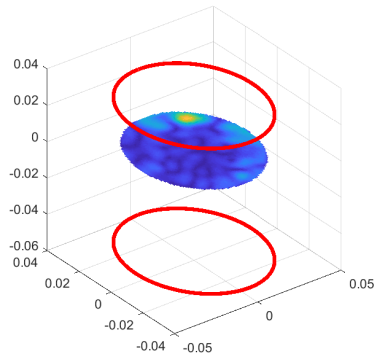

Fig. 6. Planar cut of the image reconstruction for the virtually moving jar

B. Imaging of moving target

A further set of simulations were studied to solve this issue, getting more resolution along the movement axis and also to try to simulate a virtual motion of the food product on the line: the jar has been moved with respect to the antenna array position in 13 different positions (Fig. 5), with a 1 cm step. Due to the movement of the object it is not possible to measure in each frame the full scattering matrix, due to the time needed to switch among all the antennas. Accordingly, for each position a single couple of active antennas has been considered, and the employed scattering matrix is obtained by merging these different interactions. While such a reduction obviously entails a loss of the availble data, it is based on a measurement arrangement which is fully compliant with the actual scenairo. Moreover, taking advatange of the movement of the target, the diversity which is lost in terms of multi-view pairs along the arch, is gained in diversity of illumination and measurement across the direction of movement, so that in this way the target is oberved from different directions by antennas placed on a (fictitious) semi-cylindrical surface (a sort of tunnel).

Further studies would assess the best choice for the optimal switching sequence: here, preliminary results are shown, with an arbitrary choice of couples of antennas for given positions; the reconstruction shown in Fig. 6, validates the idea of compensating the image distortion along the movement axis and correctly detect the contaminant in the expected plane. As can be seen the acquisition of data across the (virtual) surface compensates the lack of data in a single section and results in a satisfactory image of the inclusion.

IV. Conclusion and perspectives

In this work we have assessed the MWI model to control the presence of contaminants down to 2 mm in size within cocoa-cream products. Results obtained with measurements of an effective prototype will be presented at the conference, validating the simulation results in a static scenario.

Further, next steps will involve the measurement of the same scenario with the object to analyze in motion. For this purpose, the measurements will be synchronized with a standard photo-electric cell detecting the presence of the objects and triggering the measure. Moreover, as explained, it will be necessary to control the switching among the different antennas, in order to know the exact position of the active antennas with respect to the moving jar, and select the appropriate switching sequence to maximize the illumination of the target, as it has been simulated in the here presented “virtual” motion.

ACKNOWLEDGMENT

This work was partially supported by Compagnia di San Paolo, under the research project "MIT-Food, Microwave Imaging Technology for Food Contamination Monitoring". We also thank Nutkao Srl for the food supplies.

REFERENCES

[1] M. Pastorino, "Microwave Imaging", Whiley, 2010
[2] Z. Wu and H. Wang, Microwave Tomography for Industrial Process Imaging: Example Applications and Experimental Results, IEEE Antennas and Propagation Magazine, pp. 61 – 71, Volume: 59 Issue: 5, 2017
[3] O. Schimmer et al., "UWB-Sensors in Food Quality Management -the Way from the Concept to Market", Proc. IEEE Int. Conf. on Ultra-Wideband, 2008.
[4] http://www.foodradar.com/
[5] M. Edwards, "Detecting foreign bodies in food", Woodhead Publishing Ltd, 2004.
[6] Scapaticci, Rosa et al. "Design and Numerical Characterization of a Low-Complexity Microwave Device for Brain Stroke Monitoring." IEEE Transactions on Antennas and Propagation 66 (2018): 7328-7338.
[7] J. A. Tobon Vasquez et al., "Design and Experimental Assessment of a 2-D Microwave Imaging System for Brain Stroke Monitoring", Int. Journal of Antennas and Propagation, Article ID 8065036, 12 pages, 2019
[8] M. Bertero and P.Boccacci, Introduction to Inverse Problems in Imaging, Bristol, U.K.: Inst. Phys., 1998.