POLITECNICO DI TORINO
Repository ISTITUZIONALE

Recent developments on refined theories for beams with applications

Original
Recent developments on refined theories for beams with applications / Carrera, Erasmo; Pagani, Alfonso; Petrolo, Marco; Zappino, Enrico. - In: MECHANICAL ENGINEERING REVIEWS. - ISSN 2187-9753. - STAMPA. - 2:2(2015), pp. 1-30. [10.1299/mer.14-00298]

Availability:
This version is available at: 11583/2606161 since: 2020-04-24T14:28:28Z

Publisher:
The Japan Society of Mechanical Engineers

Published
DOI:10.1299/mer.14-00298

Terms of use:

This article is made available under terms and conditions as specified in the corresponding bibliographic description in the repository

Publisher copyright

(Article begins on next page)

12 October 2024

Bulletin of the JSME

Vol.X, No.X, XXXX

Recent developments on refined theories for beams with applications

Erasmo CARRERA*, Alfonso PAGANI*, Marco PETROLO* and Enrico ZAPPINO*

* Department of Mechanical and Aerospace Engineering, Politecnico di Torino

Corso Duca degli Abruzzi 24. 10129, Torino, Italy

E-mail: erasmo.carrera@polito.it

Abstract

This paper is a review of the most influential approaches to developing beam models that have been proposed over the last few decades. Essentially, primary attention has been paid to isotropic structures, while a few extensions to composites have been given for the sake of completeness. Classical models - Da Vinci, Euler-Bernoulli and Timoshenko - are described first. All those approaches that are aimed at the improvement of classical theories are then presented by considering the following main techniques: shear correction factors, warping functions, Saint-Venant based solutions and decomposition methods, variational asymptotic methods, the Generalized Beam Theory and the Carrera Unified Formulation (CUF). Special attention has been paid to the latter by carrying out a detailed review of the applications of 1D CUF and by giving numerical examples of static, dynamic and aeroelastic problems. Deep and thin-walled structures have been considered for aerospace, mechanical and civil engineering applications. Furthermore, a brief overview of two recently introduced methods, namely the mixed axiomatic/asymptotic approach and the component-wise approach, has been provided together with numerical assessments.

The review presented in this paper shows that the development of advanced beam models is still extremely appealing, due to the computational efficiency of beams compared to 2D and 3D structural models. Although most of the techniques that have recently been developed are focused on a given number of applications, 1D CUF offers the breakthrough advantage of being able to deal with a vast variety of structural problems with no need for ad hoc formulations, including problems that can notoriously be dealt with exclusively by means of 2D or 3D models, such as complete aircraft wings, civil engineering constructions, as well as multiscale and wave propagation analyses. Moreover, 1D CUF leads to a complete 3D geometrical and material modeling with no need of artificial reference axes/surfaces, reduced constitutive equations or homogenization techniques.

Key words : Beams, Refined theories, Structural analysis, Carrera Unified Formulation.

1. Historical review of beam theories starting from Leonardo da Vinci

Beam models have been developed and exploited extensively over the last few decades for the structural analysis of slender bodies, such as columns, arches, blades, aircraft wings and bridges. The three-dimensional (3D) problem, in a beam model, is reduced to a set of one-dimensional (1D) variables, which only depend on the beam-axis coordinate. 1D structural elements, or beam elements, are simpler and computationally more efficient than 2D (plate/shell) or 3D (solid) elements. For instance, in a finite element (FE) scenario, beam models have no aspect ratio constraints. These features make beams still very appealing for the static and dynamic analyses of structures.

Over the years, many beam models have been developed according to different approaches. The main contributions to the development of the beam theory are outlined in this section by referring to some macro categories. Each category is then described in detail in the subsequent sections of this paper.

The first known description of the mechanical behavior of a beam under bending was given by Leonardo da Vinci. In his Madrid Codex (Da Vinci, 1493), Leonardo correctly described the bending behavior of a slender beam, as shown in Fig. 1. He hypothesized the well-known linear distribution of the axial strain on the cross-section.

The classical, oldest and most frequently employed beam models are those by Euler-Bernoulli (Bernoulli, 1751; Euler,

*Received DD MM, YYYY (No. XX-XXXX)

[DOI: 10.1299/XXX.X.1]

Copyright © 2013 by JSME

1744) (hereafter referred to as EBBT), Saint-Venant (1856a,b) (DSV) and Timoshenko (1922a,b) (TBT). These theories

Fig. 1 Leonardo's description of beam bending (Da Vinci, 1493).

share many important features but also have some important differences. A comprehensive comparison of EBBT and TBT can be found in Mucichescu (1984) and in Section 3. TBT enhances EBBT and DSV by considering the shear deformation effect. However, TBT can only give a uniform shear distribution along the cross-section of the beam. It is well-known that a more appropriate distribution should at least be parabolic in order to accommodate the stress-free boundary conditions on the unloaded edges of the beam. Shear correction factors related to the cross-section geometry are commonly employed as remedies. While EBBT and DSV are reliable tools for the analysis of homogenous, compact, isotropic slender structures under bending, TBT can also be employed for moderately thick orthotropic beams.

Classical beam theories represent a computationally cheap and, to some extent, reliable tool for many structural mechanics problems. These models are essentially based on a linear axial, out-of-plane displacement field and a constant transverse, in-plane displacement field. In other words, these models can predict linear axial strain distributions and rigid transverse displacements. Although this simplified displacement field requires no more than five degrees of freedom (DOFs), it also precludes the detection of many effects, such as out-of-plane warping, in-plane distortions, torsion, coupling effects, or local effects. These effects are usually due to small slenderness ratios, thin walls, geometrical and mechanical asymmetries, and the anisotropy of the material.

Many methods have been proposed to overcome the limitations of classical beam theories and to allow the application of 1D models to any geometry or boundary condition, without jeopardizing their computational efficiency with respect to 2D and 3D models. Several examples of these models can be found in well known books on the theory of elasticity, for example, the book by Novozhilov (1961). A possible grouping of all these methodologies to build higher-order beam models could be the following:

- The introduction of shear correction factors.
- Warping functions.
- Saint-Venant based 3D solutions and the Proper Generalized Decomposition method (PGD).
- The Variational Asymptotic Beam Sectional Analysis (VABS), which is based on the Variational Asymptotic Method (VAM).
- The Generalized Beam Theory (GBT).
- The Carrera Unified Formulation (CUF).

As previously mentioned, some of the first proposed approaches were based on the introduction of shear correction factors to improve the global response of classical beam theories, as in the works by Timoshenko (1922a,b) and Timoshenko and Goodier (1970), Sokolnikoff (1956) and Cowper (1966).

The introduction of warping functions to improve the displacement field of beams is another well-known strategy. Warping functions were first introduced in the framework of the Saint-Venant torsion problem (Ladevze and Simmonds, 1998; Lubliner, 1990; Sokolnikoff, 1956). Some of the earliest contributions to this approach were those by Umanskij (1939), Vlasov (1961) and Benscoter (1954).

The Saint-Venant solution has been the theoretical basis of many advanced beam models. 3D elasticity equations were reduced to beam-like structures by Ladevéze and his co-workers (Ladéveze and Simmonds, 1996). Using this approach, a beam model can be built as the sum of a Saint-Venant part and a residual part and then applied to thick beams and thin-walled sections.

The PGD for structural mechanics was first introduced by Ladevéze (1999). PGD can be considered as a powerful tool to reduce the numerical complexity of a 3D problem. Bognet et al. (2012, 2014) applied PGD to plate/shell problems, whereas Vidal et al. (2012) extended PGD to beams.

Asymptotic methods represent a powerful tool to develop structural models. In the beam model scenario, the works by Berdichevsky (1976) and Berdichevsky et al. (1992) were among the earliest contributions that exploited the VAM. These works introduced an alternative approach to constructing refined beam theories in which a characteristic parameter (e.g. the cross-section thickness of a beam) is exploited to build an asymptotic series. Those terms that exhibit the same order of magnitude as the parameter when it vanishes are retained. Some valuable contributions on asymptotic methods are

those related to VABS models, as in Volovoi et al. (1999).
The GBT has been derived from Schardt's work (Schardt, 1966, 1989, 1994a). The GBT enhances classical theories by exploiting a piece-wise description of thin-walled sections. It has been employed extensively and extended, in various forms, by Silvetre and Camotim, and their co-workers (Silvestre and Camotim, 2002). Many other higher-order theories, based on enhanced displacement fields over the beam cross-section, have been introduced to include non-classical effects. Some considerations on higher-order beam theories were made by Washizu (1968). Other refined beam models can be found in the excellent review by Kapania and Raciti (1989a,b), which focused on bending, vibration, wave propagations, buckling and post-buckling. Refined beam models have been exploited extensively for aeroelastic applications. Some of the most important contributions are those by Librescu and Song (1992) and Qin and Librescu (2002).
One of the most recent contributions to beam theories has been developed in the framework of the CUF (Carrera and Giunta, 2010). The main novelty of CUF models is that the order of the theory is a free parameter, or an input, of the analysis and it can be chosen via a convergence analysis. CUF can also be considered as a tool to evaluate the accuracy of any structural model in a unified manner.
This paper is organized as follows: Section 2 offers a brief description and literature review of the main categories of beam models; classical beam models and CUF models based on Taylor polynomials are described in Section 3; Sections 4, 5 present the CUF beam models based on Lagrange polynomials and the Component-Wise approach, respectively; Sections 6-7 provide numerical examples and benchmarks that were assessed through the 1D CUF for static, dynamic and aeroelastic problems; the main conclusions are drawn in Section 8.

2. Significant contributions debated over the last decades

This section provides details on some of the most important beam models that have been developed in the last few years and, in most cases, are still being developed. For the sake of brevity, only the main features of each formulation are given and described in order to highlight the pros and cons. The orthogonal reference system shown if Fig. 2 is adopted throughout this paper.

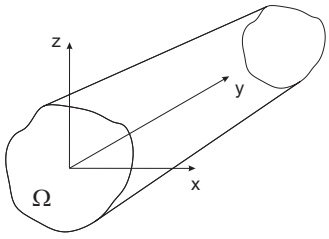

Fig. 2 Coordinate frame of the beam model.

2.1. Shear Correction Factors

Shear correction factors have been introduced over the years to enhance classical beam theories (Cowper, 1966; Sokolnikoff, 1956; Timoshenko, 1922a,b; Timoshenko and Goodier, 1970). TBT, in fact, can only lead to a uniform shear distribution along the cross-section of the beam. It is well-known that a more appropriate distribution should at least be parabolic in order to accommodate the stress-free boundary conditions on the unloaded edges of the beam, as shown in Fig. 3. Shear correction factors can be defined in various ways, and they depend on the problem characteristics to a great

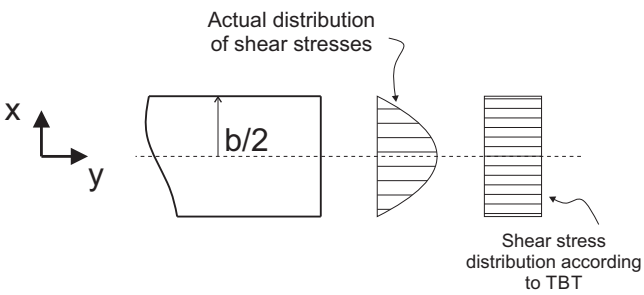

Fig. 3 Homogeneous condition of transverse stress components at the unloaded edges of the beam.

extent. Two examples of shear correction factor definitions are given hereinafter. Cowper (1966) considered the mean deflection of the cross-section (W), the mean angle of rotation of the cross-section around the neutral axis (Φ) and the total transverse shear force acting on the cross-section (Q),

$$W = \frac{1}{A}\int\int u_z\,dx\,dz \tag{1}$$

$$\Phi = \frac{1}{I}\int\int x u_y\,dx\,dz \tag{2}$$

$$Q = \int\int \sigma_{xy}\,dx\,dz \tag{3}$$

where A is equal to the cross-section area, and I is the moment of inertia of the cross-section. The shear correction factor, K^C, is computed by exploiting the following equation:

$$\frac{\partial W}{\partial y} + \Phi = \frac{Q}{K^C A G} \tag{4}$$

where G indicates the shear modulus.
Gruttmann and Wagner (2001) adopted the following definition, which had been introduced by Bach and Baumann (1924) and Stojek (1964):

$$\int\int(\sigma_{yx}^2 + \sigma_{yz}^2)\,dx\,dz = \frac{F_x^2}{K_x^G A} + \frac{F_z^2}{K_z^G A} \tag{5}$$

where the shear correction factors, K_x^G and K_z^G, are computed by letting F_z and F_x be equal to zero, respectively.
Refined beam models, based on higher-order displacement fields, do not require such correction factors, as proved by Carrera et al. (2012e).

2.2. Generalized Beam Theory

The analysis of thin-walled beam structures requires the use of advanced structural models. The assumption of a rigid cross-section introduced by the classical models does not allow the cross-sectional warping that usually appears in these structures to be included. The GBT represents a family of models introduced to face this problem and to accurately describe the mechanical behaviour of thin-walled members. GBT originated with the works of Schardt (1966, 1989) and Schardt and Heinz (1991). First-order beam models based on GBT were proposed in the works by Davies and Leach (1994), while refined second-order models were presented by Davies et al. (1994). An extension to orthotropic materials was proposed by Silvestre and Camotim (2002) and Silvestre (2002). The GBT approach, as shown by Silvestre and

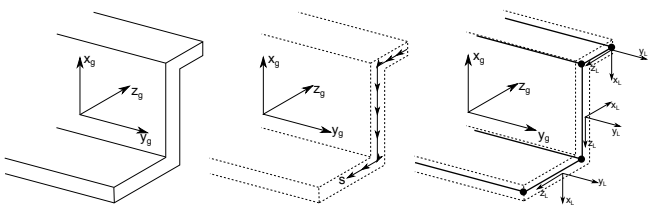

Fig. 4 GBT approximation, global, $()_g$, and local, $()_L$, reference systems.

Camotim (2002), assumes that the displacement field of a prismatic thin-walled beam (see Fig. 4a) is a product of two contributions:

$$\mathbf{u}(x_g, y_g, z_g) = \mathbf{u}(s)\psi(y_g) \tag{6}$$

where $\mathbf{u}(s)$ is the mid-plane displacement vector, which depends on the s coordinate (see Fig. 4b) while $\psi(y_g)$ is an amplitude function defined over the beam axis y. Figure 4c shows how the beam can be assumed to be composed of a number of panels according to GBT (see Silvestre and Camotim (2002)). In the GBT simplest form, it can be assumed that for each panel:

- Kirchhoff's hypotheses are verified ($\gamma_{xy} = 0$, $\gamma_{xz} = 0$ and $\varepsilon_{xx} = 0$).
- The only membrane (m) strain considered is the longitudinal one, i.e. $\varepsilon_{yy}^m \neq 0$, while all the flexural (f) strains are taken into account, i.e. $\varepsilon_{yy}^f \neq 0$, $\varepsilon_{zz}^f \neq 0$ and $\gamma_{yz}^f \neq 0$.

The mid-plane curve can be considered as a piece-wise curve defined using a number of nodes, as shown in Fig.4*c*. If the displacements, $\mathbf{u}(s)$, are assumed to have a linear behaviour, the displacements field becomes:

$$\mathbf{u}(x_g, y_g, z_g) = \mathbf{u}_k F_k(s)\psi(y_g) \tag{7}$$

where $F_k(s)$ is a linear function that is equal to 1 in the $k-ht$ node and 0 in the other nodes, while $\mathbf{u}_k$ is the displacement vector in the $k-ht$ node. Moreover, GBT introduces a number of geometrical relations that allow the transversal displacements, u_x and u_z, to be expressed in terms of the longitudinal displacement, u_y.
The GBT has been widely used in the analysis of thin-walled structure and, over the past twenty years, this class of models has been used to solve several structural problems and a few examples are given hereinafter. The GBT was applied to dynamic problems in the works by Bebiano et al. (2008, 2013), in which global and local modes were investigated. The elastic stability of thin-walled structures has been investigated extensively using the GBT. Schardt (1994a,b) used these models to perform the buckling analysis of thin-walled structure. The same approach was used by Goncalves and Camotim (2004) to investigate the local and the global buckling of isotropic structures. GBT models were also used to perform buckling analyses in the works by Dinis et al. (2006), Silvestre (2007) and Basaglia et al. (2008). An experimental verification of the GBT for the buckling analysis was provided by Leach and Davies (1996). The capabilities of GBT in the analysis of thin-walled structures and their low computational costs make these models particularly useful for non-linear analyses. Goncalves and Camotim (2007) introduced a non-linear formulation based on GBT to investigate the post-buckling behaviour of thin-walled structures, in which plasticity effects were included. Other non-linear beam models based on GBT were presented by Basaglia et al. (2010), Abambres et al. (2013) and Abambres et al. (2014).

2.3. Warping functions

The so-called warping function was introduced with the Saint-Venant torsion problem, which has been formulated in many textbooks and papers over the years (Ladevze and Simmonds, 1998; Lubliner, 1990; Sokolnikoff, 1956) as a basic example of the theory of elasticity. According to the Saint-Venant free warping problem, the warping function is the solution of Laplace's equation subjected to Neumann boundary conditions.
The most well-known theories that account for higher-order phenomena through the use of the warping function are those by Vlasov (1961) and Benscoter (1954). In these theories, non-uniform warping in thin-walled profiles is taken into account by including, in the displacement field, the following longitudinal warping displacement, u_y^{wrp}:

$$u_y^{\mathrm{wrp}}(x, y, z) = \Gamma(x, z)\,\mu(y) \tag{8}$$

where y is the longitudinal axis of the beam, x and z are the coordinates of the cross-section, μ is the warping parameter, and Γ is the Saint-Venant warping function, which depends on the geometry of the cross-section. In the case of a shear-bending problem on the xy-plane, the warping function is a cubic function of the x-coordinate (Reddy et al., 1997) and μ does not necessarily depend on the γ_{xy} cross-sectional strain. On the other hand, in the case of torsion, the warping parameter μ is the derivative of the rotation angle (Vlasov, 1961) or an independent function (Benscoter, 1954).
The application of the Vlasov beam model to thin-walled beams with a closed cross-section leads to unsatisfactory results, since the mid-plane shear strains in the walls cannot be neglected. The first to formulate the warping function for closed profiles was Umanskij (1939). From then on, many researchers have developed advanced beam theories based on the use of the Saint-Venant warping function. Some recent important contributions are mentioned hereinafter. El Fatmi (2007a,b,c) has developed a non-uniform warping theory that accounts for three independent warping parameters and the related warping functions. Prokić (1993, 1996a,b) has formulated a new warping function that is able to account for both closed and open cross-sections. Sapountzakis and his co-workers have developed a boundary element method that includes the warping DOF for non-uniform torsional dynamic (Sapountzakis and Mokos, 2006; Sapountzakis and Tsipiras, 2010) and static (Sapountzakis, 2000; Sapountzakis and Mokos, 2003; Sapountzakis and Protonotariou, 2008) analyses. Wackerfuß and Gruttmann (2011) have developed a FE based on the Hu-Washizu variational formulation and focussing on the construction of 'locally-defined' warping functions. In Gruttmann et al. (2000) and Wagner and Gruttmann (2001), the unknown warping function has been approximated using an isoparametric concept. Prandtl's membrane analogy and the Saint Venant torsion theory have been used in Chen and Hsiao (2007), on the basis of the Vlasov theory, to obtain an approximate Saint Venant warping function for a prismatic thin-walled beam. In Ferradi et al. (2013), the warping functions have been determined iteratively using equilibrium equations along the beam. Yoon and Lee (2014) have formulated the entire warping displacement field as a combination of the three basic warping functions (one free warping function and two interface warping functions).

2.4. 3D Solutions based on the Saint-Venant Model and the Proper Generalized Decomposition

Ladéveze and Simmonds (1996), Ladéveze et al. (2004), and Ladevze and Simmonds (1998) have built 3D solutions for beam problems by adding enrichment terms to the Saint Venant solution. In such a framework, the displacement field can be written as

$$\boldsymbol{u}(x, y, z) = \boldsymbol{u}_{SV}(x, y, z) + \boldsymbol{u}_{NSV}(x, y, z) \tag{9}$$

The latter term, also known as the decaying term, takes into account various non-classical effects, e.g. the end-effects. Such solutions are exact since they do not add any further assumptions to the 3D elasticity equations. On the other hand, these solutions are problem dependent.

Another important contribution to the solution of the 3D elasticity problem is the PGD, which was first introduced by Ladevéze (1999). Given a 3D problem, PGD decomposes it as the summation of N 1D and/or 2D functions (y is the axial coordinate of the beam),

$$\boldsymbol{u}(x, y, z) \approx \sum_{i=1}^{N} \boldsymbol{U}_i^x(x) \cdot \boldsymbol{U}_i^y(y) \cdot \boldsymbol{U}_i^z(z) \tag{10}$$

or,

$$\boldsymbol{u}(x, y, z) \approx \sum_{i=1}^{N} \boldsymbol{U}_i^{xz}(x, z) \cdot \boldsymbol{U}_i^y(y) \tag{11}$$

where $\boldsymbol{U}$ are the 2D or 1D unknown functions. This decomposition allows one to solve the 3D problem with 2D or 1D complexity. Bognet et al. (2012, 2014) applied PGD to plate/shell problems, while Vidal et al. (2012) extended PGD to beams.

2.5. Variational Asymptotic Method

Axiomatic theories have been introduced by hypothesizing the most important mathematical terms that need to be considered for a given structural problem. Further improvements are generally obtained by adding terms to the series expansions. An important drawback of axiomatic methods is the lack of information about the accuracy of the approximated theory with respect to the exact 3D solution. In other words, it is not usually possible to a-priori evaluate the accuracy of an axiomatic theory. This lack of information has to be overcome by engineers who have to evaluate the validity of a theory on the basis of their knowledge and experience.

The asymptotic method can be seen as a step towards the development of approximated theories with known accuracy with respect to the 3D exact solution (see also Cicala (1965)), which, in the beam case, is a method that can approximate the 3D energy though 1D terms with known accuracy.

The VAM was first introduced by Berdichevsky (1976) in the beam model scenario. VAM exploits small parameters of a beam structure, such as the thickness of the cross-section, h. The unknown functions (e.g. warping) are then expanded considering h as:

$$f = f_0 + f_1\, h + O(h^2) \tag{12}$$

The strain energy is then obtained according to this expansions and only the terms of a certain order with respect to h are retained. The unknown functions, which are asymptotically correct up to a given order of h, are then obtained by minimizing the strain energy. The solution to this variational problem can be found in closed-form for a few cross-section geometries and materials only. In order to overcome this limitation and to be able to deal with anisotropic and non-homogenous materials, as well as arbitrary cross-sections, the VABS has been developed (Volovoi et al., 1999; Wang and Yu, 2014; Yu and Hodges, 2004, 2005; Yu et al., 2002). VABS exploits the FE approach over the beam cross-section to solve the variational problem.

The development of asymptotic theories is generally more difficult than the development of axiomatic ones. The main advantage of these theories is that they contain all the terms whose effectiveness is of the same order of magnitude. Moreover, these theories are exact as h, or any other small parameter that is exploited to build the expansion, $\rightarrow 0$.

2.6. Carrera Unified Formulation

The CUF is a hierarchical formulation that can be used to reduce 3D problems to 2D or 1D ones in a unified manner, that is, by exploiting arbitrary rich expansions of the unknown variables. In the structural mechanics scenario and in a displacement based formulation, the CUF defines the displacement field of a structural model as the expansion of generic functions F_τ,

$$\mathbf{u} = F_\tau \mathbf{u}_\tau, \qquad \tau = 1, 2, ..., M \tag{13}$$

where $\mathbf{u}$ is the displacement vector, $\mathbf{u}_\tau$ is the generalized displacements unknown array and M stands for the number of terms of the expansion. According to the Einstein notation, the repeated subscript, τ, indicates summation. The expression given by Eq. 13 is valid for both 1D and 2D models since these models are obtained by acting on the expansion functions F_τ. In fact,

$$\begin{aligned} 1D &: \mathbf{u}(x,y,z) = F_\tau(x,z)\mathbf{u}_\tau(y), \tau = 1,2,....,M_{1D} \\ 2D-Shell &: \mathbf{u}(\alpha,\beta,z) = F_\tau(z)\mathbf{u}_\tau(\alpha,\beta), \tau = 1,2,....,M_{2D} \end{aligned} \tag{14}$$

where α and β are the in-plane curvilinear coordinates. Such a displacement field description leads to the so-called fundamental nuclei of the problem matrices (e.g. the stiffness matrix). These nuclei are invariant with respect to the order of the expansion and the type of the expansion functions. More details are given in the next sections of this paper. In the case of 1D models, the expansions of the displacement field are related to the cross-section coordinates (x,z) while the unknowns of the problem are given at a certain location above the cross-section. In the case of 2D models, the expansions are related to the thickness coordinate (z) and the unknowns are given in a certain point along z. The expansion functions and their order can be arbitrary (e.g. polynomials, exponentials, harmonic functions). In a FE scenario and upon the introduction of the 3D material constitutive relations and of the differential geometrical relations, Eq. 14 leads to the following form of the virtual variation of the internal work:

$$\delta L_{int} = \delta \mathbf{u}_{sj}^T \mathbf{K}^{\tau sij} \mathbf{u}_{\tau i} \tag{15}$$

where $\mathbf{K}^{\tau sij}$ is the stiffness matrix written in the form of the fundamental nuclei, $\boldsymbol{u}$ is the nodal displacement vector and δ is the virtual variation. The superscripts indicate the four indexes exploited to assemble the matrix: i and j are related to the shape functions along the beam axis, while τ and s are related to the expansion functions over the cross-section. The fundamental nucleus is a 3×3 array that is formally independent of the order of the structural model. Eq. 15 is valid for both 2D and 1D models. More details about the 2D formulation can be found in Carrera (2002, 2003) and Carrera et al. (2014c). A detailed literature review about the 1D CUF is given hereafter, whereas a comprehensive theoretical description of the 1D CUF can be found in Carrera et al. (2010a, 2011a, 2012a, 2014c).

2.6.1. Thin-Walled and Reinforced Structures 1D CUF models were first proposed to study isotropic compact and thin-walled structures by Carrera and Giunta (2010) and Carrera et al. (2010b). In these works, 1D Taylor-like polynomials were used to describe the cross-sectional displacement field, and closed-form and FE solutions were considered. Comprehensive expansion order convergence analyses have shown how the adoption of higher-order models can lead to 3D-like accuracy with small computational costs (see also Carrera et al. (2013d)). In other words, the 1D CUF hierarchical capabilities allow one to deal with different structural problems using the same formulation, since the expansion order can be set as an input and can be conveniently chosen via a convergence analysis. Furthermore, studies on locking phenomena have been carried out to show that refined displacement models do not require Poisson's locking corrections, while the adoption of parabolic or cubic FEs attenuates shear locking.

The performance of 1D CUF models against 2D shell models has been investigated in Carrera et al. (2014b) to analyze thin-walled structures. This paper highlights the enhanced capabilities of these 1D elements, in terms of low computational costs and the absence of shear and membrane lockings.

Furthermore, Refined 1D models can be used to analyse thin-walled reinforced structures, as shown by Carrera et al. (2013e,j). Complex structures with longitudinal and transverse stiffeners were analysed and beams were used to model each component. In particular, transverse ribs, although being 2D elements, were successfully modeled by means of refined beams.

A new class of 1D CUF models has been presented in Carrera and Petrolo (2012a) in which Lagrange polynomials are used to model the cross-section displacement field. The adoption of Lagrange polynomials led to the development of models that have only pure displacement unknowns. Furthermore, Lagrange beams can easily be used to model geometric discontinuities and localized boundary conditions; they can also be used to locally refine the beam model.

2.6.2. Buckling, Free Vibration and Dynamic Response Analysis 1D CUF has been extended to the free vibration analysis of isotropic structures by Carrera et al. (2011b) via the finite element method (FEM). Closed-form solutions have been considered by Giunta et al. (2013d). The shell-like capabilities of the 1D CUF were highlighted in this paper. In other words, it was shown that 1D CUF models can detect those modal shapes that are characterized by severe transverse distortions. These modes are typical of thin-walled structures and usually require shell FE modeling. 1D CUF can detect these modes with at least ten times fewer DOFs than shells. Similar results have been found for buckling (Giunta et al., 2013e; Ibrahim et al., 2012a,b). Pagani et al. (2013, 2014c) have extended 1D CUF to the Dynamic Stiffness Method

(DSM) to obtain closed-form solutions with arbitrary boundary conditions. Carrera and Varello (2012) have coupled 1D CUF to the Newmark integration scheme in order to study the dynamic response of compact and thin-walled structures. The computational advantages of 1D CUF have proved to be extremely high in the cumbersome numerical methods that are required for these problems. The dynamic response to typical loading conditions of thin-walled structures was detected with 3D-like accuracy.

2.6.3. Composite Structures Composite structures have been investigated though 1D CUF models by Catapano et al. (2011) and Carrera and Petrolo (2012b). The former considered Taylor beam models and closed-form, Navier-Type solutions. The latter exploited Lagrange beam models. Complex structures, such as aeronautic longerons, were considered. The results showed the enhanced capabilities of 1D CUF models to detect 3D stress fields with 10-100 times fewer DOFs than solid FEs.

Further enhancements of the 1D CUF have been proposed in Carrera et al. (2013h,k) by exploiting polynomial, trigonometric, exponential and zig-zag displacement fields. Accurate displacement/strain/stress fields were obtained for both slender and short structures.

2.6.4. FGM Structures Functionally graded material beams have been investigated via closed-form (Giunta et al., 2010, 2011) and FE (Mashat et al., 2014) solutions. Static and free vibration analyses were considered as well as compact and thin-walled structures. The results showed that 1D CUF detects the complete three-dimensional displacement and stress fields on the basis of the choice of the appropriate expansion order. Furthermore, the effect of different material distributions on the natural frequencies and mode shapes was investigated and compared against 3D FEs.

2.6.5. Variable Kinematics Models The enhanced capabilities of refined models are often only required in some portions of the structures, e.g. close to geometrical and mechanical boundary conditions. This has recently led to the development of techniques that can be used to couple lower- and higher-order models. Biscani et al. (2011) have exploited the Arlequin method to couple different beam models along the axis of the beam. Lower computational costs were obtained without any accuracy penalties. Carrera et al. (2013l) have obtained similar results by exploiting Lagrange multipliers. Carrera and Pagani (2013, 2014b) have introduced multi-line elements by further extending the coupling technique, based on Lagrange multipliers, to the cross-section level. Refined beam models, based on through-the-section variable kinematics, were used to analyze thin-walled and composite structures and this resulted in improved accuracy and lower computational costs.

2.6.6. Axiomatic/Asymptotic Analyses and Best Theory Diagrams A mixed axiomatic/asymptotic approach has recently been proposed by Carrera and Petrolo (2011) and Carrera et al. (2012d) to investigate the role of each generalized displacement component in a refined structural model. Starting from axiomatic theories, typical asymptotic analysis results can be found for different structural parameters, such as thickness, orthotropic ratio or boundary conditions. CUF is used to generate refined models and the effect of each variable is then investigated by evaluating the effects on the solution of its deactivation. Through the systematic use of this method, all the ineffective variables can be found and discarded to build reduced refined structural models that have the same accuracy as full models, but fewer unknown variables. The effective unknown variable set can change to a great extent as one or more structural parameters vary. When the complexity of the structural problem increases, full models should be adopted.

2.6.7. Aeroelasticity Refined beam models are particularly appealing for aeroelastic applications in which computational efficiency and highly accurate displacement fields are required. CUF 1D models were first exploited for aeroelastic applications by Carrera et al. (2013b) and Varello et al. (2011). In these works, the Vortex Lattice Method (VLM) was coupled to 1D CUF to study the static aeroelastic response of lifting surfaces. 1D CUF proved to be able to deal with typical aeroelastic bending-torsion coupling phenomena, with low computational costs. Varello et al. (2013) extended the 1D CUF static aeroelastic formulation by exploiting a 3D panel aerodynamic method.

Unsteady aeroelasticity for flutter analyses has been dealt with by Pagani et al. (2014a) and Petrolo (2012, 2013) through the Doublet Lattice Method (DLM). FEs and the DSM were employed to solve the aeroelastic problem. Flutter conditions were accurately predicted with shell-like accuracy.

Carrera and Zappino (2014) and Carrera et al. (2014a) have exploited 1D CUF models, based on Lagrange polynomials, to investigate the supersonic panel flutter of thermal insulation panels for space applications. Local, pinched boundary conditions were considered and 1D CUF proved to be a reliable tool to deal with 2D panels.

2.6.8. Load Factors and Non-Structural Masses The effects of inertial loads have been investigated by Carrera et al. (2014e) and Pagani et al. (2014b) by means of 1D CUF models. Particular attention was paid to thin-walled structures. Local effects and couplings due to asymmetric loadings were accurately detected, with low computational costs.

2.6.9. Rotors and Rotating Blades 1D CUF models have been extended to rotor dynamics analyses in Carrera and Filippi (2014) and Carrera et al. (2013c,i). Coriolis and centrifugal stiffening were considered for the free vibration analysis of compact and thin-walled rotating structures. Extremely accurate frequencies and modal shapes, including shell-like modes, were detected. 1D CUF can be seen as a powerful tool for rotor dynamics problems since is a simple formulation that offers the possibility of obtaining refined models of arbitrary accuracy.

2.6.10. Biomechanics Varello and Carrera (2014) have proposed 1D CUF models as computationally efficient tools to deal with the structural analysis of biomechanics structures. In particular, an atherosclerotic plaque was considered as a typical structure with an arbitrary cross-section geometry and was studied for both homogeneous and nonhomogeneous material cases using 1D variable kinematic models. Comparisons with 3D FEs showed that 1D CUF provides remarkable three-dimensional accuracy in the analysis of even short and highly nonhomogeneous structures with an arbitrary geometry, and offers a significant reduction in computational costs.

2.6.11. Multifield Analysis Multifield models have recently been developed on the basis of the 1D CUF. Thermo-mechanical analyses have been carried out by Giunta et al. (2013a,b) via closed-form solutions and through the radial basis function method. The temperature field was obtained by means of the Fourier heat conduction equation and then considered as an external load in the mechanical analysis.

Piezo-electric structures have been analysed by Giunta et al. (2013c), Koutsawa et al. (2013, 2014), and Miglioretti et al. (2014). The displacement components and the electric potential were modeled above the cross-section through Lagrange polynomials in a layer-wise sense. Assessments against 3D FEs showed the high accuracy and the computational efficiency of 1D CUF in a multifield analysis scenario.

2.6.12. Nanostructures Nano-beams have been analyzed through the 1D CUF by Giunta et al. (2013f). Static, free vibration and stability analyses were carried out. The effects of the cross-section side and of the crystallographic plane orientation were investigated. The results highlighted the advantages of refined beam models over classical ones and proved that accurate results can be obtained with reduced computational costs

2.6.13. Analysis of Aerospace Structures via the Component-Wise Approach A free vibration analysis of wings by means of the 1D CUF has been conducted by Carrera et al. (2012b). In particular, box wings were considered and the results highlighted the enhanced capabilities of the present formulation to deal with shell-like modes of thin-walled structures.

1D CUF has recently been extended to the so-called Component-Wise approach (CW). In a CW model, each component of a complex structure is modeled though 1D CUF models. The use of Lagrange polynomials makes the assembling of each component straightforward, since it can be conducted at the interface level by imposing displacement continuity. Furthermore, 1D, 2D and 3D structural elements can be modeled through 1D models, since the arbitrary rich displacement fields of the 1D CUF allow very short and thin-walled beams to be dealt with.

The typical components of aerospace structures are ribs, stiffeners and longerons. All these elements can be modeled through the 1D CUF. Carrera et al. (2013f,g) have exploited the CW to carry out the static and free vibration analysis of complex aerospace structures. Comparisons with 3D models and analytical solutions highlighted the high accuracy of the present formulation and its computational efficiency.

2.6.14. Analysis of Civil Structures via the Component-Wise Approach 1D CUF has been exploited for the static and free vibration analysis of bridge-like structures in Carrera et al. (2012e) and Petrolo et al. (2012). Particular attention was paid to the end-effects and a comprehensive analysis of the shear correction factors was carried out. 1D CUF models were able to detect 3D stress fields along bridge-like structures. Furthermore, it was shown that the use of refined models makes the adoption of shear correction factors unnecessary.

CW has been applied to civil structures by Carrera and Pagani (2014a) and Carrera et al. (2014d). In these papers, 1D CUF was exploited to model complex structures such as industrial and civil buildings. 3D stress states and local vibration modes were accurately detected with very low computational costs.

2.6.15. Component-Wise Approach for the Multiscale Analyses of Composites CW can be considered as a multiscale approach for composite structures. In fact, CW can be used to model different scale components - layers, fibers and matrices - by accounting for their material characteristics and with no need for coupling techniques. In other words, no homogenization techniques are needed for the material properties and the different scale models can be straightforwardly assembled since only 1D FEs are employed. Refined models at the microscale level can be employed solely where required, for instance where failure can occur, whereas macroscale models can be used elsewhere. Carrera et al. (2012c, 2013a) have applied CW to the analysis of composite structures and, in particular, have computed failure indexes with 3D-like accuracy and about 100 times fewer DOFs than 3D solid elements.

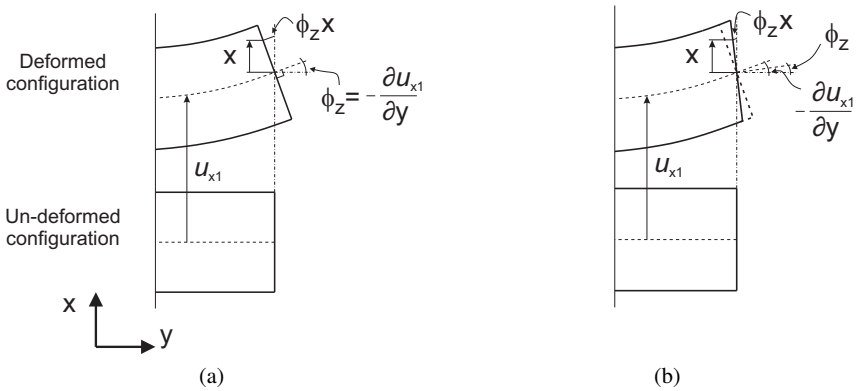

Fig. 5 Differences between Euler-Bernoulli (a) and Timoshenko (b) beam theories.

3. Classical theories, variable kinematic assumptions and Taylor expansion CUF theories

A number of refined beam theories have been proposed over the years to overcome the limitations of classical beam models, as already mentioned in the previous sections. According to the rectangular cartesian coordinate system shown in Fig. 2, and considering a beam under bending on the xy-plane, the kinematic field of EBBT can be written as:

$$\begin{aligned} u_x &= u_{x1} \\ u_x &= u_{y1} - x\,\frac{\partial u_{x1}}{\partial y} \end{aligned} \tag{16}$$

where u_x and u_y are the displacement components of a point belonging to the beam domain along x and y, respectively. u_{x1} and u_{y1} are the displacements of the beam axis, whereas $-\dfrac{\partial u_{x1}}{\partial y}$ is the rotation of the cross-section about the z-axis (i.e. ϕ_z) as shown in Fig. 5a. According to EBBT, the deformed cross-section remains plane and orthogonal to the beam axis. EBBT neglects the cross-sectional shear deformation phenomena. Generally, shear stresses play an important role in several problems (e.g. short beams, composite structures) and their neglect can lead to incorrect results. One may want to generalize Eq. (16) and overcome the EBBT assumption of the orthogonality of the cross-section. The improved displacement field results in the TBT,

$$\begin{aligned} u_x &= u_{x1} \\ u_y &= u_{y1} + x\,\phi_z \end{aligned} \tag{17}$$

TBT constitutes an improvement over EBBT since the cross-section does not necessarily remain perpendicular to the beam axis after deformation and one degree of freedom (i.e. the unknown rotation ϕ_z) is added to the original displacement field (see Fig. 5b).

Classical beam models yield reasonably good results when slender, solid section, homogeneous structures are subjected to bending. Conversely, the analysis of deep, thin-walled, open section beams may require more sophisticated theories to achieve sufficiently accurate results, see Novozhilov (1961). One of the main problems of TBT is that the homogeneous conditions of the transverse stress components at the top/bottom surfaces of the beam are not fulfilled, as shown in Fig. 3. One can impose, for instance, Eq. (17) in order to have null transverse strain components ($\gamma_{xy} = \frac{\partial u_x}{\partial y} + \frac{\partial u_y}{\partial x}$) at $x = \pm\frac{b}{2}$. This leads to the third-order displacement field known as the Reddy-Vlasov beam theory (Vlasov, 1961),

$$\begin{aligned} u_x &= u_{x1} \\ u_y &= u_{y1} + f_1(x)\,\phi_z + g_1(x)\,\frac{\partial u_{x1}}{\partial y} \end{aligned} \tag{18}$$

where $f_1(x)$ and $g_1(x)$ are cubic functions of the x coordinate. It should be noted that although the model of Eq. (18) has the same number of DOFs of TBT, it overcomes classical beam theory limitations by foreseeing a quadratic distribution of transverse stresses on the cross-section of the beam.

The above theories are not able to include any kinematics resulting from the application of torsional moments. The simplest way to include torsion consists of considering a rigid rotation of the cross-section around the y-axis (i.e. ϕ_y), see

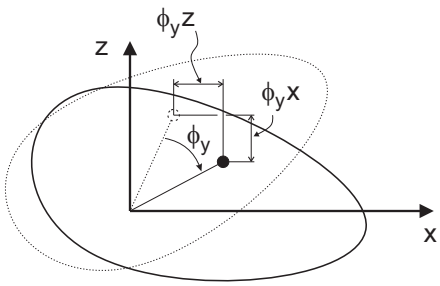

Fig. 6 Rigid torsion of the beam cross-section.

Fig. 6. The resulting displacement model is:

$$\begin{aligned} u_x &= z\,\phi_y \\ u_z &= -x\,\phi_y \end{aligned} \tag{19}$$

where u_z is the displacement component along the z-axis. According to Eq. (19), a linear distribution of transverse displacement components is needed to detect the rigid rotation of the cross-section about the beam axis. Beam models that include all the capabilities discussed so far can be obtained by summing all these contributions. By considering the deformations also in the yz-plane, one has

$$\begin{aligned} u_x &= u_{x1} + z\,\phi_y \\ u_y &= u_{y1} + f_1(x)\,\phi_z + f_2(z)\,\phi_x + g_1(x)\left(\frac{\partial u_{x1}}{\partial y} + z\frac{\phi_y}{\partial y}\right) + g_2(z)\left(\frac{\partial u_{z1}}{\partial y} - x\frac{\phi_y}{\partial y}\right) \\ u_z &= u_{z1} - x\,\phi_y \end{aligned} \tag{20}$$

where $f_1(x)$, $g_1(x)$, $f_2(z)$, and $g_2(z)$ are cubic functions. These beam models are not able to account for many *higher-order effects*, such as the second-order in-plane deformations of the cross-section.

As discussed in the previous sections, many refined beam theories have been proposed over the last century to overcome the limitations of classical beam modelling. However, as a general guideline, one can state that the richer the kinematic field, the more accurate the 1D model becomes (Washizu, 1968). However, richer displacement fields lead to a higher amount of equations to be solved and, moreover, the choice of the additional expansion terms is generally problem dependent.

The CUF can be considered as a tool to tackle the problem of the choice of the expansion terms. In the CUF framework, the displacement field is described through Eq. (13) and, according to it, Eq.s (16) to (20) consist of MacLaurin expansions that uses 2D polynomials $x^i\,z^j$ as base functions, where i and j are positive integers. This class of models is referred to as TE (Taylor-Expansion). It should be noted that Eq.s (16), (17), and (19) are particular cases of the linear ($N = 1$) TE model, which can be expressed as

$$\begin{aligned} u_x &= u_{x_1} + x\,u_{x_2} + z\,u_{x_3} \\ u_y &= u_{y_1} + x\,u_{y_2} + z\,u_{y_3} \\ u_z &= u_{z_1} + x\,u_{z_2} + z\,u_{z_3} \end{aligned} \tag{21}$$

where the parameters on the right-hand side (u_{x_1}, u_{y_1}, u_{z_1}, u_{x_2}, etc.) are the displacements of the beam axis and their first derivatives. Higher-order terms can be taken into account according to Eq.(13). For instance, the displacement fields of Eq.s (18) and (20) can be considered as particular cases of the third-order ($N = 3$) TE model,

$$\begin{aligned} u_x &= u_{x_1} + x\,u_{x_2} + z\,u_{x_3} + x^2\,u_{x_4} + xz\,u_{x_5} + z^2\,u_{x_6} + x^3\,u_{x_7} + x^2z\,u_{x_8} + xz^2\,u_{x_9} + z^3\,u_{x_{10}} \\ u_y &= u_{y_1} + x\,u_{y_2} + z\,u_{y_3} + x^2\,u_{y_4} + xz\,u_{y_5} + z^2\,u_{y_6} + x^3\,u_{y_7} + x^2z\,u_{y_8} + xz^2\,u_{y_9} + z^3\,u_{y_{10}} \\ u_z &= u_{z_1} + x\,u_{z_2} + z\,u_{z_3} + x^2\,u_{z_4} + xz\,u_{z_5} + z^2\,u_{z_6} + x^3\,u_{z_7} + x^2z\,u_{z_8} + xz^2\,u_{z_9} + z^3\,u_{z_{10}} \end{aligned} \tag{22}$$

The possibility of dealing with any-order expansion makes the TE CUF able to handle arbitrary geometries, thin-walled structures and local effects as it has been shown for both static (Carrera et al., 2010b, 2012e) and free vibration analyses (Carrera et al., 2012b; Pagani et al., 2013; Petrolo et al., 2012).

4. Use of local frame and Lagrange expansion CUF theories

TE model unknowns are displacements and N-order derivatives of the displacement field. These variables are usually defined along the axis of the beam. The unknown variables become pure displacements if Lagrange polynomials are

adopted as expansion functions (F_τ) in Eq. (13). The resulting models are referred to as LE (Lagrange-Expansion) models in the framework of the CUF. LE models were introduced in recent works by the first author and his co-workers (Carrera and Petrolo, 2012a; Carrera et al., 2012a). Different Lagrange polynomials were used to interpolate the displacement field over the beam cross-section and they are shown in Fig. 7. Three- (L3), four- (L4) and nine-point (L9) polynomials were formulated which lead to linear, quasi-linear (bilinear), and quadratic kinematics, respectively. The isoparametric formulation was exploited to deal with arbitrary shaped geometries. The Lagrange polynomial expansions can be found in (Oñate, 2009). For instance, the interpolation functions in the case of an L4 element are the following ones:

$$F_\tau = \frac{1}{4}(1 + r\, r_\tau)(1 + s\, s_\tau) \qquad \tau = 1, 2, 3, 4 \tag{23}$$

where r and s vary from -1 to $+1$, and r_τ and s_τ are the coordinates in the natural plane of the four points whose location are shown in Fig. 7b. According to the CUF, the displacement field given by an L4 element is

$$\begin{aligned} u_x &= F_1\, u_{x_1} + F_2\, u_{x_2} + F_3\, u_{x_3} + F_4\, u_{x_4} \\ u_y &= F_1\, u_{y_1} + F_2\, u_{y_2} + F_3\, u_{y_3} + F_4\, u_{y_4} \\ u_z &= F_1\, u_{z_1} + F_2\, u_{z_2} + F_3\, u_{z_3} + F_4\, u_{z_4} \end{aligned} \tag{24}$$

where $u_{x_1}, ..., u_{z_4}$ are the displacement variables of the problem and represent the translational displacement components of each of the four points of the L4 element. For further refinements, the cross-section can be discretized by using several L-elements as in Fig. 8, where two assembled L9 elements are shown. Moreover, via LE, FE mathematical models can be built by using only physical boundaries; artificial lines (beam axes) and surfaces (plate/shell reference surfaces) are no longer necessary. Figure 9 shows the physical volume/surface approach of the present modelling technique in which a 3D geometry can be accurately modeled via LE since the problem unknowns can be spread above the physical surfaces of the structure. This capability can be extremely powerful in a CAD-FEM coupling scenario, for instance in an optimization problem, since the 3D CAD geometry can be straightforwardly exploited to build the FE model.

5. Component-Wise approach for complex sections by LE and TE

Most of the engineering structures are composed of different components, such as stringers, panels and ribs in the case of aerospace structures, or columns, girders and walls in the case of typical civil constructions. However, these components usually have different geometries and scales. In recent works, the component-wise (CW) approach has been introduced in the framework of the CUF. The CW approach allows each typical component of a structure to be modeled through the 1D CUF formulation. In a FE framework, this means that different components are modelled by means of the same 1D FE, i.e. the same stiffness matrix is used for each component. Figure 10 shows two examples of CW applications to aerospace and composite structures, respectively. The CW methodology favors the tuning of the model capabilities by (1) choosing which component requires a more detailed model; (2) setting the order of the structural model to be used.
Static and dynamic analyses of reinforced-shell wing structures (Carrera et al., 2013f,g) as well as civil engineering framed constructions (Carrera and Pagani, 2014a; Carrera et al., 2014d) by 1D CW models have been carried out and the results have revealed the strength of this class of models in dealing with complex geometries, localized boundary conditions and 3D accuracy with very low computational costs.
The CW has been recently exploited for the analysis of composite structures in Carrera et al. (2012c, 2013a). In particular, failure index distributions were computed and compared with 3D solid FEs. The CW for composite structures can be seen as a computationally cheap multiscale approach, in particular

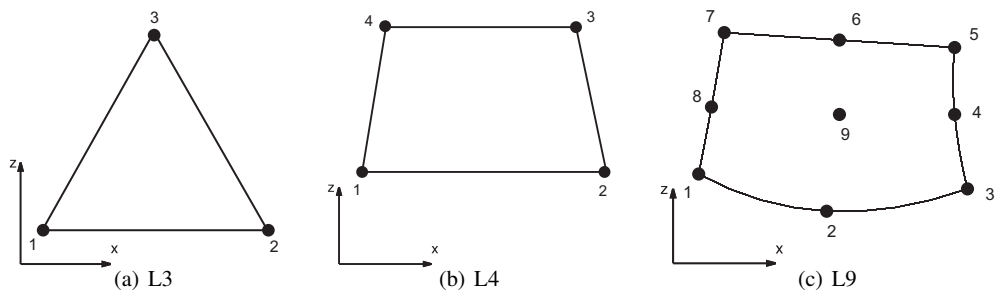

Fig. 7 Cross-sectional Lagrange polynomial sets.

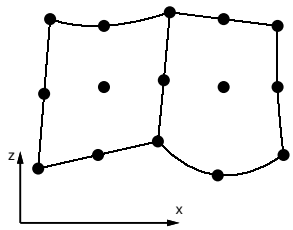

Fig. 8 Two assembled L9 elements in actual geometry.

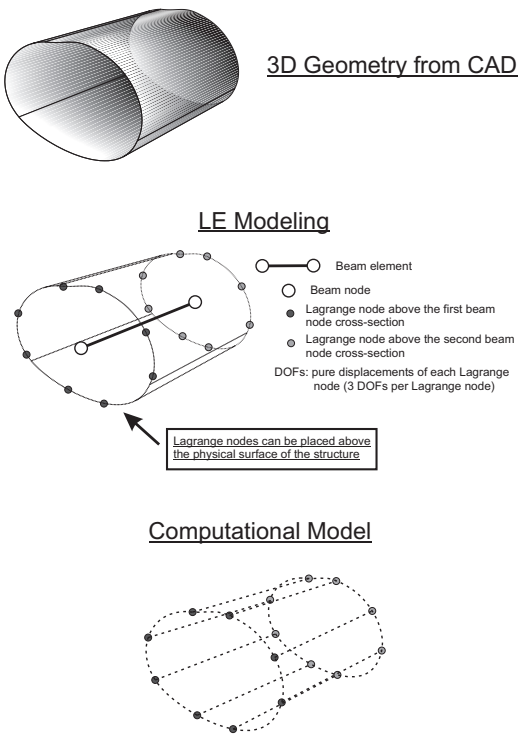

Fig. 9 The physical volume/surface approach of LE.

- Macroscale components, e.g. layers, and microscale components, e.g. fibers, can be simultaneously modeled through the same 1D formulation. Coupling techniques to deal with different scales are not required.
- Each component can be modeled with its material characteristics, in other words, no homogenization techniques are necessary.
- The adoption of the same type of 1D FEs allow highly accurate modelings to be used only where needed, e.g. in proximity of failure zones, whereas lower fidelity modelings can be used elsewhere.
- The adoption of 1D FEs makes the computational costs of the CW approach 10-100 times lower than solid elements.

An example of CW utilization as a multiscale approach is shown in Fig. 11 in which the shear stress above a composite aeronautical longeron is considered (Carrera et al., 2012c). The top flange fibers and matrix were CW modeled, whereas, elsewhere, the modeling was at the layer level.

6. Benchmarks and results for static, dynamic, and aeroelastic problems

This section deals with numerical results for a number structural problems; including statics, dynamics and aeroelasticity. Furthermore, CW examples are provided, and the enhanced capabilities of the CUF beam are shown via the analysis of typical shell problems by means of beam elements.

6.1. Benchmarks and results for static problems

The static analysis of an aeronautical longeron is considered in this section. The geometry of the structure is shown in Fig. 12, the longeron has three longitudinal stiffeners. The structure was clamped at $y = 0$, whereas a point load, $F_z = -1 \times 10^4\ N$, was applied at the center of the upper stringer at $y = L$. The geometrical characteristics were as follows: axial length, $L = 3\ m$; cross-section height, $h = 1\ m$; area of the stringers, $A_s = 1.6 \times 10^{-3}\ m^2$; sheet panel thickness, $t = 2 \times 10^{-3}\ m$; distance from the intermediate stringer to the x-y plane, $b = 0.18\ m$. The material data are: the Young modulus, $E = 75$ GPa; Poisson ratio, $\nu = 0.33$.

Five different structural models were considered: EBBT (93 DOFs), TBT (155 DOFs), an $N = 8$ beam model (4185 DOFs), an LE beam model with 5 cross-sectional elements (3813 DOFs) and a solid element model (72450 DOFs).

Figures 13 and 14 show stress distributions above the cross-section of the beam. LEs provide the most accurate distributions with respect to the solid elements with 20 times fewer DOFs. More details and results on the static analysis of aeronautical structures can be found in Carrera et al. (2013f).

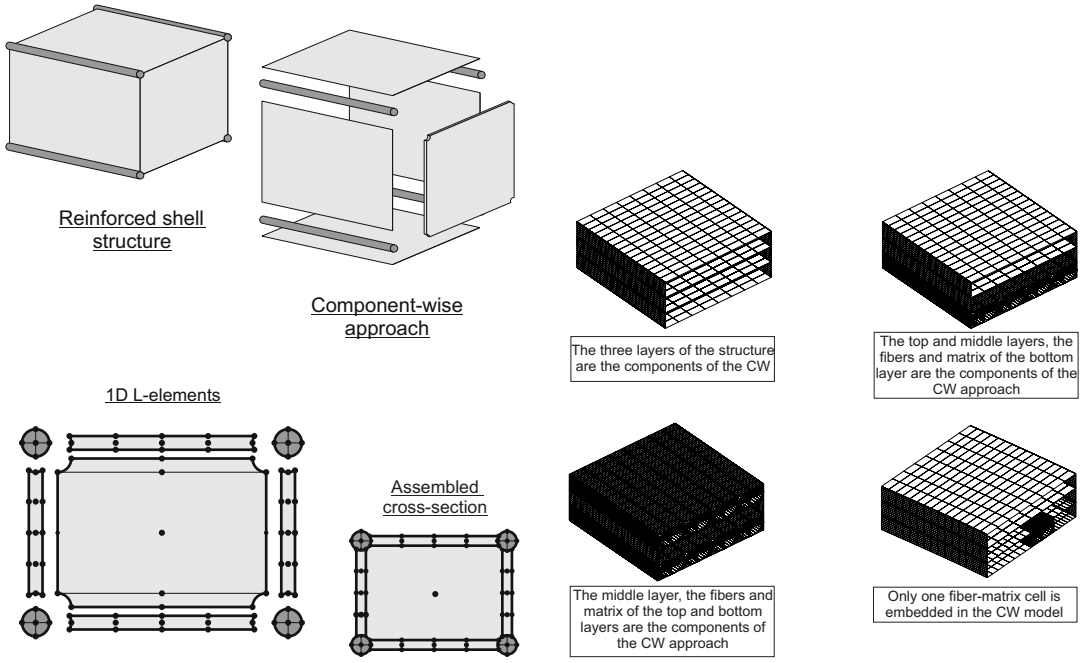

(a) A reinforced shell structure for aerospace applications

(b) A fiber reinforced composite structure

Fig. 10 CW modeling of multi-component structures.

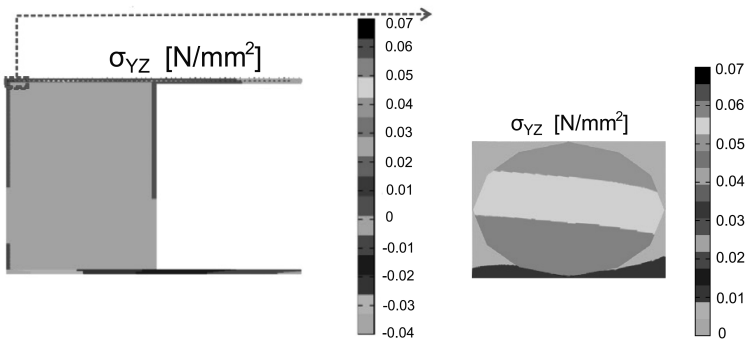

Fig. 11 CW as a multiscale approach.

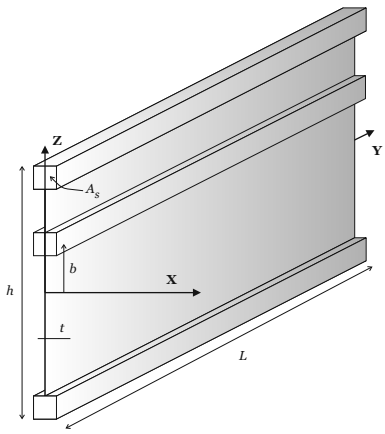

Fig. 12 Three-stringer spar cross-section.

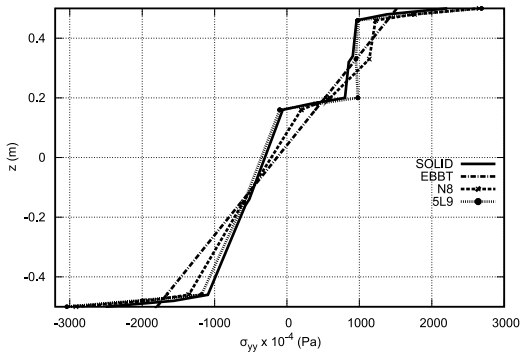

Fig. 13 Three-stringer spar cross-section, axial stress at $x = y = 0$.

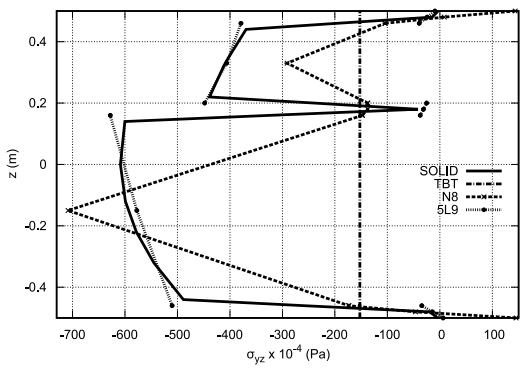

Fig. 14 Three-stringer spar cross-section, shear stress at $x = 0$, $y = L/2$.

6.2. Benchmarks and results for structural dynamics

The dynamic response analysis of a thin-walled structure is presented in this section; these results can be found in Carrera and Varello (2012) together with more comprehensive analyses on deep and thin-walled structures. A clamped-clamped cylinder (Fig. 15) was considered (the outer diameter d is equal to 0.1 m, the thickness is equal to 0.001 m and the span-to-diameter ratio (L/d) is equal to 10). Four points were considered over the mid-span cross-section where four concentrated forces were applied as time-dependent sinusoids with amplitude $P_{z0} = 10000\ N$ and a phase shift,

$$\begin{aligned} P_{zA}(t) &= P_{z0}\sin(\omega t + \phi_A) & \phi_A &= 0 \\ P_{xB}(t) &= P_{z0}\sin(\omega t + \phi_B) & \phi_B &= 30 \\ P_{zC}(t) &= -P_{z0}\sin(\omega t + \phi_C) & \phi_C &= 60 \\ P_{xD}(t) &= -P_{z0}\sin(\omega t + \phi_D) & \phi_D &= 90 \end{aligned} \tag{25}$$

where the angular frequency is $\omega = 100$ rad s^{-1} and the the time interval $[0, 0.025]$ s. Table 1 shows the displacements of two points at $t = 0$ s. The configuration at the final time instant $t = 0.025$ s is shown in Fig. 16 (mid-span cross-section). $N = 4$ is unable to detect any local effect near the loading points; it only detects a global deflection of the circular section. On the contrary, with $N = 7$ and $N = 10$, the proposed 1D model perfectly detects the local deformations typical of a shell-like behavior.

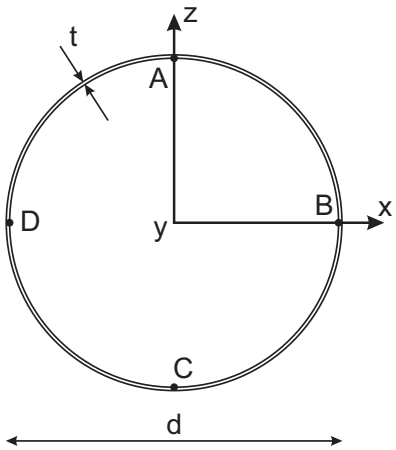

Fig. 15 Thin-walled circular cross-section.

Table 1 Displacements (mm) of the loading points A and D for different models at $t = 0$ s (Carrera and Varello, 2012).

Model	u_{xD}	Error u_{xD}	u_{zA}	Error u_{zA}	DOFs
EBBT	−0.9906	−95.78 %	−1.7157	−82.64 %	93
TBT	−1.1453	−95.12 %	−1.9838	−79.93 %	155
$N = 1$	−2.0937	−91.08 %	−1.4362	−85.47 %	271
$N = 3$	−2.9313	−87.51 %	−3.5311	−64.27 %	930
$N = 4$	−5.9690	−74.56 %	−6.8900	−30.29 %	1395
$N = 7$	−15.7213	−32.99 %	−9.3591	−5.31 %	3348
$N = 10$	−19.7523	−15.81 %	−9.7314	−1.54 %	6138
$N = 14$	−21.1939	−9.67 %	−9.8418	−0.43 %	11160
NASTRAN	−23.4628	–	−9.8840	–	250000

6.3. Application to aeroelasticity

The 1D CUF model enhanced capabilities for aeroelastic analyses are presented in this section. Static aeroelasticity, flutter and panel flutter problems are dealt with.

6.3.1. Static Aeroelasticity of Wings A metallic straight wing model was considered ($E = 69$ GPa, $\nu = 0.33$, $V_\infty = 30$ m/s) as in Fig. 17. The aerodynamic loads were iteratively computed through a 3D panel method (Varello et al., 2013). Figure 18 shows the deformed cross-section via different beam models. Expansion orders higher than the tenth are needed to accurately detect the in-plane distortion of the cross-section. The $N = 14$ model had 11160 DOFs. In Varello et al. (2013), more details including a comprehensive comparison with solid elements can be found.

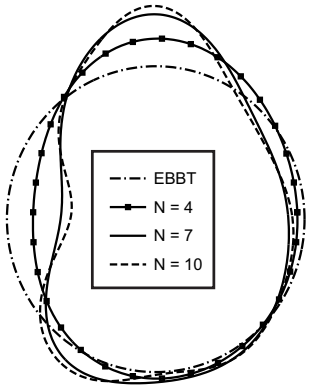

Fig. 16 Deformation of the mid-span circular cross-section, $t = 0.025s$.

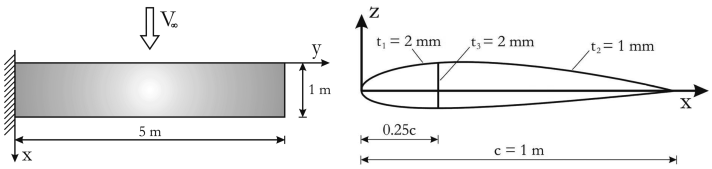

Fig. 17 Wing model for the static aeroelastic analysis, NACA 2415 airfoil cross-section.

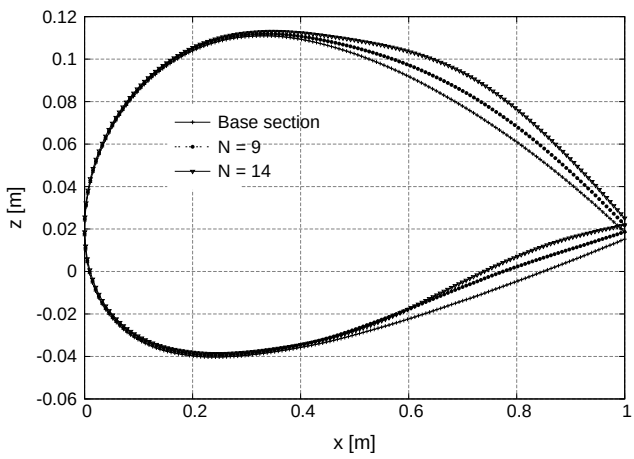

Fig. 18 Aeroelastic deformation of the airfoil cross-section at $y = 4$ m via different beam models, $V_\infty = 30$ m/s.

6.3.2. Flutter Analysis of Lifting Surfaces An isotropic wing modeled as a flat plate was considered whose characteristics are the following: length (L) equal to 0.305 m, chord (c) equal to 0.076 m and thickness (t) equal to 0.001 m. An aluminum alloy was employed ($E = 73.8\ GPa$, $G = 27.6\ GPa$ and $\rho = 2768\ Kg/m^3$). The structural analysis was carried put through the DSM, the DLM was employed to compute the unsteady aerodynamics and the g-method to compute the flutter conditions.

Table 2 shows the flutter conditions against the sweep angle (positive angles indicate backward wings). The results from classical (EBBT and TBT) and $N = 1$ models were not reported since these models are not able to detect flutter conditions with torsional/bending couplings. At least a third-order beam model ($N = 3$) is required to detect accurate flutter conditions as also shown with detailed comparisons with plate models in Petrolo (2012, 2013).

6.3.3. Panel flutter The 1D model based on CUF was used to carry out the panel flutter analysis of a square panel pinched at the corners, see Fig. 19. The aeroelastic forces were described by means of the piston theory (Ashley and Zartarian, 1956). The piston theory is a linear model that provides accurate results in supersonic speed regimes. The panel has a dimension a equal to 0.5 m, a thickness of 0.002 m and it is made of an aluminium alloy with Young's modulus E equal to 73 GPa, Poisson's ratio ν equal to 0.3, and density ρ equal to 2700 Kg/m^3. The use of LE allows non-conventional constraint for a beam to be straightforwardly introduced. In this case, all the corner points were clamped. Fig. 20 shows the evolution of the natural frequencies and of the damping at an altitude of 20000 m for Mach numbers ranging from 1.5 to 10. The results are compared with those from a classical two-dimensional model. The accuracy of the results is due to the accuracy of the structural model which is able to predict the dynamic behaviour of the panel as shown in Figure 21, in which the models involved in the instability are depicted and the natural frequency are given.

6.4. Application to component-wise analysis

In this section, applications of 1D CUF models to the analysis of complex structures via the CW approach are presented. These results can be found in Carrera and Pagani (2014a) in which the free vibration analysis of civil structures was carried out. The free vibrations of the structure shown in Fig. 22 were investigated. The main dimensions of the typical portal frame construction for industrial buildings are given in Table 3. Columns and frames had square sections with side $t = 0.2\ m$. The thickness of the roof was also equal to t. The whole structure was made of a steel alloy with $E = 210\ GPa$, $\nu = 0.28$, and $\rho = 7.85 \times 10^3\ Kg/m^3$. The four vertical columns were clamped to the ground as shown in Fig. 22. The first five natural frequencies are given in Table 4 and both CW and MSC Nastran models are considered. The results by the CW approach were compared to 3D solid and 1D/2D MSC Nastran models. In the 3D solid model, MSC Nastran CHEXA 8-node elements were used. The 1D/2D MSC Nastran model was built by using 2-node CBAR elements for columns and frames and 4-node CQUAD4 elements for the roof. Global modes (i.e. bending and torsional) as well as local modes are clearly detected by the CW model as it is shown in Fig. 23.

6.5. Refined beams for shell-like structure analysis

Refined beam models can be exploited to deal with typical shell problems, such as the pinched shell problem that was first proposed by Flügge (1960), see Fig. 24 and Table 5. These results can be found in Carrera et al. (2014b) in which a number of typical shell problems were dealt with by means of advanced beam and shell models.

LEs were employed and, due to the symmetry of the problem, one-eight of the cylinder was modeled. Two different L-element distributions were used. In the first configuration, 29 L9 elements were considered and a uniform mesh above the cross-section was adopted. In the second configuration, 30 L16 elements were adopted and the element distribution above the cross-section was linearly refined in proximity to the loading point.

Table 2 Flutter velocities and frequencies for different sweep angles via different beam models (Pagani et al., 2014a).

Λ	$N = 2$		$N = 3$		$N = 4$	
	m/s	Hz	m/s	Hz	m/s	Hz
−30°	84.086	64.773	59.366	52.181	58.188	51.668
−20°	64.769	61.616	51.559	56.737	51.559	56.581
−10°	49.676	62.020	46.210	59.816	46.371	59.746
0°	69.388	40.002	68.503	39.029	68.523	38.995
+10°	65.441	38.362	64.305	37.361	64.506	37.352
+20°	66.408	36.736	61.046	35.095	59.130	34.793
+30°	70.145	34.156	57.747	31.887	57.216	31.616

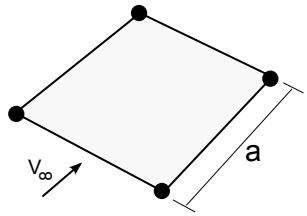

Fig. 19 Geometry and boundary conditions of the panel.

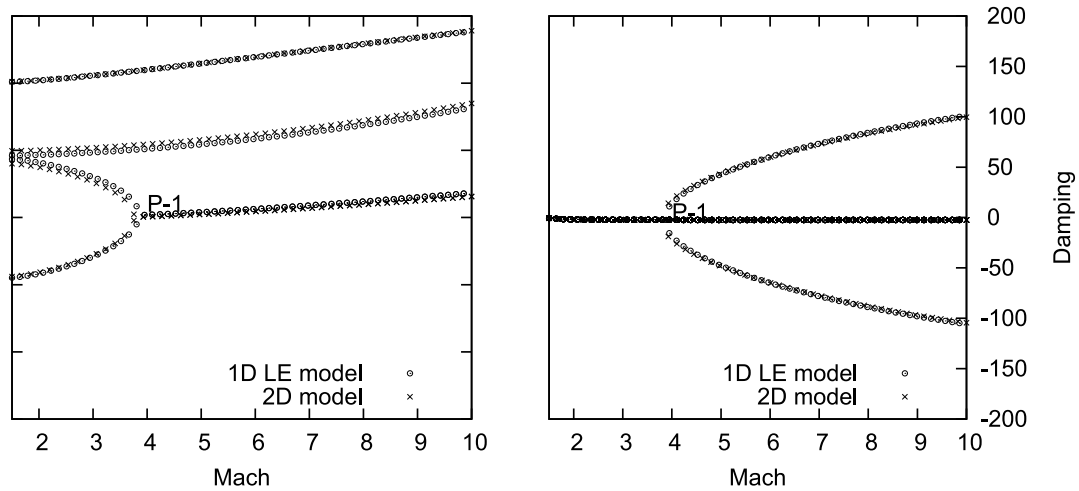

Fig. 20 Evolution of the frequencies and the aerodynamic damping at different Mach number, the results are compared with those from a classical 2D model.

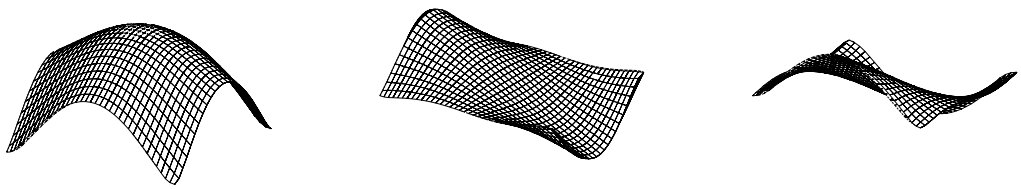

(a) Mode 1, 19.16 Hz (b) Mode 2, 38.90 Hz (c) Mode 3, 40.31 Hz

Fig. 21 First three modes of the panel and natural frequencies, LE beam models.

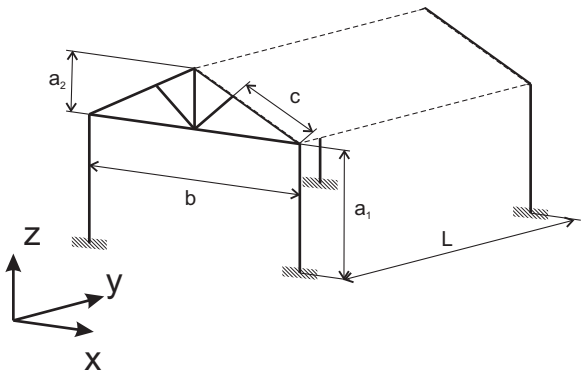

Fig. 22 Industrial building.

Table 3 Main dimensions of the portal frame industrial construction.

	Dimensions, m
Length, L	14.00
Width, w	13.80
h_1	7.00
h_2	3.00
c	4.50

Table 4 Natural frequencies (Hz) of the industrial building. For each structural model, the number of DOFs is reported in brackets. (Carrera and Pagani, 2014a)

	CW (6399)	Nastran 1D/2D (2836)	Nastran 3D (143121)
Mode 1^b	0.42	0.49	0.50
Mode 2^t	0.80	0.84	0.87
Mode 3^r	4.10	4.25	4.32
Mode 4^r	10.60	10.68	10.88
Mode 5^r	10.34	11.37	11.53

^{b}: Bending on plane yz; ^{t}: Torsional along y; ^{r}: Local roof mode

(a) CW model (4.10 Hz) (b) NAS3D model (4.25 Hz) (c) NAS1D&2D model (4.32 Hz)

Fig. 23 Third modal shape of the industrial building.

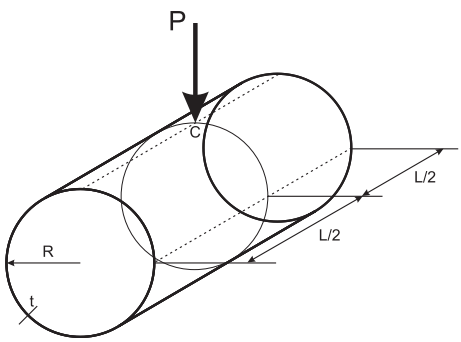

Fig. 24 Pinched shell.

Table 5 Pinched shell physical data.

Young's modulus	E	3×10^6 psi
Poisson's ratio	ν	0.3
Load	P	1 lb
Length	L	600 in
Radius	R	300 in
Thickness	t	3 in

Tables 6 and 7 present the transverse displacement of the loading point for the simply-supported and the clamped-clamped case, respectively. Figure 25 shows the deformed top-half cross-section at $L/2$ and the distribution of the transverse displacement. There is a perfect match between the 1D and the 2D models. The present 1D formulation is able to detect very complex 3D deformed configurations of thin-walled structures undergoing point loads with computational costs comparable to those of shell models.

7. Asymptotic/Axiomatic evaluation of beam models and the Best Theory Diagram

Structural models are based on a given number of unknown variables, or degrees of freedom. In the displacement approach, the unknown variables are generalized displacement components. The contribution of each variable varies depending on the structural problem and, in general, some variables can be more important than others in predicting the mechanical behavior of a structure. Moreover, some terms might not have any influence, since their absence does not corrupt the accuracy of the solution.

The development of a structural model can be seen as a process that aims to the definition of the minimum number of unknown variables that is necessary to obtain accurate results for a given structural problem. The TBT, for instance, is based on 5 unknown variables and it gives satisfactory results for moderately short beams under bending loads. The TBT, in particular, has 3 constant terms and 2 linear terms along the axis of the beam. As soon as, for instance, torsion has to be dealt with, a number of additional unknown variables must be accounted for; e.g. linear in-plane terms, and parabolic or cubic out-of-plane terms may be needed. The choice of such additional variables can be based on the intuition of scientists (axiomatic method), or on the asymptotic investigation of the influence of a variable against a number of structural parameters such as the thickness (asymptotic method).

In the CUF framework for beams, plates and shells, the so called Mixed Axiomatic-Asymptotic Approach (MAAA) has been recently developed to investigate the influence of each variable of a refined structural theory, and to build reduced refined theories which have the same accuracies as full expansion models but fewer unknown variables and to obtain the best theory diagram (BTD), where the accuracy of a model can be evaluated against the number of variables (Carrera and Petrolo, 2010, 2011). The choice of the name is due to the fact that MAAA is capable of obtaining asymptotic-like results, starting from axiomatic-like hypothesis. The influence of a variable can in fact be investigated against the variation of various parameters (e.g. thickness, boundary conditions, etc.), by using the MAAA and this analysis is conducted starting from axiomatic-like hypotheses. The smallest number of variables required to fulfill a given accuracy requirement can thus be determined. The basic MAAA can be briefly described as follows:

(1) CUF is used to generate the governing equations for the considered theories.

(2) A theory is fixed and used to establish the accuracy

(3) Each variable is deactivated in turn and the effects of its deactivation are evaluated; if no effects are observed, the variable is discarded.

(4) The displacement model with the smallest number of terms is then detected for a given structural lay-out and a give set of output quantities.

The reduced models can be obtained by opportunely rearranging the rows and columns of the FE matrices or through penalty techniques.

The ultimate outcome that stems form a systematic MAAA analysis is the Best Theory Diagram (see Fig. 26) in which the computational cost of a structural model, i.e. the number of terms of a structural model, is given against its accuracy. The BTD allows one to build a structural model in order to use fewer terms for a given error (vertical shift, Δ_N), or to increase the accuracy while keeping the computational costs constant (horizontal shift, Δ_{ERROR}). The plot generally appears as a hyperbola.

Table 6 Simply-supported pinched shell, transversal displacement, u_z, at the loading point (midsurface) (Carrera et al., 2014b).

Model	$u_z \times 10^5$, *in*	DOFs
	2D shell	
ESL3	1.8427	8748
	1D LE	
29 L9	1.7959	5310
30 L16	1.8359	10920

An advanced version of the MAAA has been recently developed (Carrera and Miglioretti, 2012) in which genetic algorithms were employed to avoid the cumbersome evaluation of all the possible theories that can be obtained out of a given set of variables. MAAA takes advantage of a graphic notation to improve the readability of the results. On the basis of the adopted notation, the 1D model given in Table 8 refers to the following cross-section displacement field:

$$\begin{aligned} u_x &= u_{x_1} + x\, u_{x_2} + z\, u_{x_3} + x^2\, u_{x_4} + xz\, u_{x_5} + z^2\, u_{x_6} \\ u_y &= u_{y_1} + x\, u_{y_2} + \qquad\quad + x^2\, u_{y_4} + xz\, u_{y_5} + z^2\, u_{y_6} \\ u_z &= u_{z_1} + x\, u_{z_2} + z\, u_{z_3} \quad + x^2\, u_{z_4} + xz\, u_{z_5} + z^2\, u_{z_6} \end{aligned} \tag{26}$$

Reduced 1D models for the modal analysis of beams with various cross-sections are reported hereafter as in Carrera et al. (2012d). A C-shaped beam was considered and three natural modes were investigated, the first bending mode along the z-direction (*Bending z*), the first bending mode along the x-direction (*Bending x*) and the first torsional mode. Table 9 shows the reduced models. For instance, the reduced model that is able to detect the first torsional mode as accurately as a full $N = 4$ mode is the following:

$$\begin{aligned} u_x &= z\, u_{x_3} + xz\, u_{x_5} + x^2 z\, u_{x_8} + z^3\, u_{x_{10}} + x^3 z\, u_{x_{12}} + xz^3\, u_{x_{14}} \\ u_y &= z\, u_{y_3} + xz\, u_{y_5} + x^2 z\, u_{y_8} + z^3\, u_{y_{10}} + x^3 z\, u_{y_{12}} + xz^3\, u_{y_{14}} \\ u_z &= u_{z_1} + x^2\, u_{z_4} + z^2\, u_{z_6} + x^3\, u_{z_7} + xz^2\, u_{z_9} + x^4\, u_{z_{10}} \end{aligned} \tag{27}$$

Such reduced models are influenced by the problem characteristics to a great extent, that is, as one parameter changes (e.g. a different geometry, boundary condition or material), different variables are required.

8. Conclusion

This paper presents a review of the most important techniques for the development of advanced beam models. The following six main techniques have been considered: the introduction of shear correction factors, the development of warping functions, Saint-Venant based solutions and decomposition methods, variational asymptotic methods, the Generalized Beam Theory and the Carrera Unified Formulation. The theoretical foundations of each technique have been outlined briefly. Particular attention has been paid to the CUF and a comprehensive description of its advanced capabilities has been given via a number of numerical examples. Furthermore, novel techniques that have stemmed from the CUF, the mixed axiomatic/asymptotic approach and the component-wise approach, have been outlined.

The present review proves the great interest in the development of advanced beam theories since beams are computationally more efficient than 2D and 3D models and can lower the computational costs to a great extent in many cumbersome structural analyses, such as fluid-structure interaction problems, multiscale applications, non-linear and dynamic response analyses.

The most evident difficulties and limitations that have to be dealt with in the development of an advanced beam model are:

- Beam models are usually problem dependent, that is, it is difficult to develop models that can deal with arbitrary geometries, boundary conditions and material characteristics.
- Beam models introduce fictitious lines or surfaces on which the problem unknowns lie. This aspect makes a detailed 3D modeling of a structure difficult, not to say impossible. Furthermore, coupling with CAD models can be troublesome and lengthy.
- Beam models often introduces approximations at the material level. In fact, homogenized material characteristics are more often than not employed and reduced constitutive equations are implemented.

1D CUF models are particularly advantageous since they are not affected by the aforementioned issues and in particular

- CUF models can deal with arbitrary geometries, boundary conditions and materials.

Table 7 Clamped-clamped pinched shell, transversal displacement, u_z, at the loading point (midsurface) (Carrera et al., 2014b).

Model	$u_z \times 10^5$, *in*	DOFs
	2D shell	
ESL3	1.5279	8748
	1D LE	
30 L16	1.5196	10920

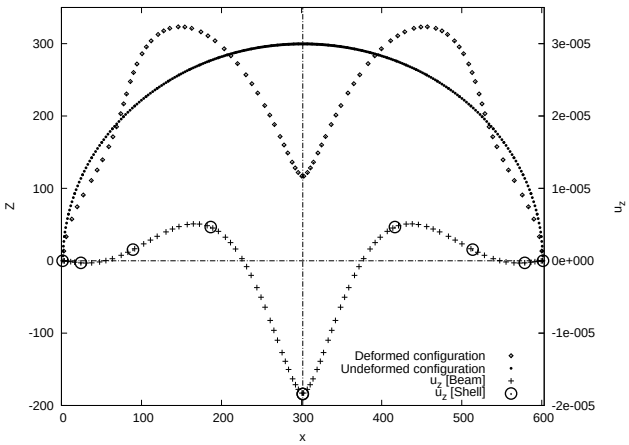

Fig. 25 Simply-supported pinched shell, comparisons between beam and shell solutions at the midspan section.

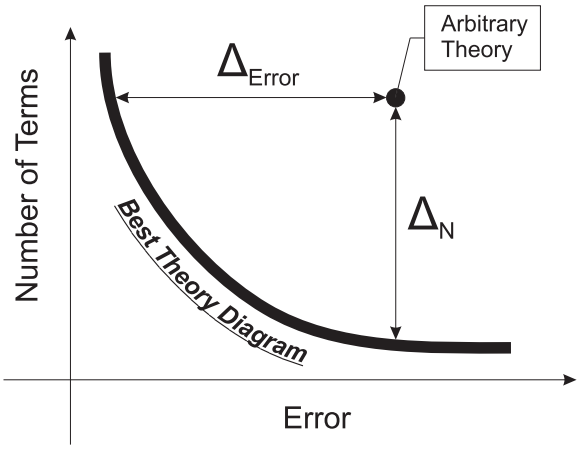

Fig. 26 The Best Theory Diagram.

Table 8 Symbolic representation of the reduced kinematic model with u_{y_3} deactivated.

▲	▲	▲	▲	▲	▲
▲	▲	△	▲	▲	▲
▲	▲	▲	▲	▲	▲

Table 9 Reduced models for the modal analysis of a cantilever C-shaped cross-section beam.

1st bending z, $M_{eff}/M = 20/45$															
△	△	▲	△	▲	△	△	▲	△	▲	△	▲	△	▲	△	△
△	△	▲	△	▲	△	△	▲	△	▲	△	▲	△	▲	△	△
▲	▲	△	▲	△	▲	▲	△	▲	△	▲	△	▲	△	△	△
1st bending x, $M_{eff}/M = 17/45$															
▲	▲	△	▲	△	▲	△	△	△	△	△	△	△	△	△	▲
▲	▲	△	▲	△	▲	▲	△	△	△	▲	△	▲	△	▲	
△	△	▲	△	▲	△	△	△	△	▲	△	△	△	▲	△	
1st torsional, $M_{eff}/M = 19/45$															
△	△	▲	△	▲	△	△	▲	△	▲	△	▲	△	▲	△	△
△	△	▲	△	▲	△	△	▲	△	▲	△	▲	△	▲	△	△
▲	▲	△	▲	△	▲	▲	△	▲	△	▲	△	△	△	△	△

- 1D CUF models lead to the component-wise description of a structure. This means that, although a 1D formulation is employed and its computational advantages are preserved, a complete and accurate 3D modeling of the geometrical and material characteristics can be obtained.
- 1D CUF models do not require homogenization techniques, since the real material characteristics of whatsoever structural component can be employed. This aspect can be of fundamental importance in many applications, such as the failure analysis of composites.

Future developments should be aimed at the application of 1D models to very cumbersome structural problems, such as those in biomechanics, wave propagations, multiscale analyses and fluid-structure interactions.

References

Abambres, M., D. Camotim, and N. Silvestre (2013). "Physically non-linear {GBT} analysis of thin-walled members". In: *Computers and Structures* 129.0, pp. 148 –165. ISSN: 0045-7949.

Abambres, M., D. Camotim, N. Silvestre, and K.J.R. Rasmussen (2014). "GBT-based structural analysis of elasticplastic thin-walled members". In: *Computers and Structures* 136.0, pp. 1 –23. ISSN: 0045-7949.

Ashley, H. and G. Zartarian (1956). "Piston Theory - A New Aerodynamic Tool ffor the Aeroelastician". In: *Composites Structures*, pp. 1109–1118.

Bach, C. and R. Baumann (1924). *Elastizität und Festigkeit*. Berlin: Springer.

Basaglia, C., D. Camotim, and N. Silvestre (2008). "Global buckling analysis of plane and space thin-walled frames in the context of GBT". In: *Thin-Walled Structures* 46, 79101.

Basaglia, C., D. Camotim, and N. Silvestre (2010). "Local , Distortional and Global Post-Buckling Analysis of Frames using Generalised Beam Theory". In: *Proceedings of the Tenth International Conference on Computational Structures Technology*. Valencia, Spain.

Bebiano, R., N. Silvestre, and D. Camotim (2008). "Local and global vibration of thin-walled members subjected to compression and non-uniform bending". In: *Journal of Soundand Vibration* 315, pp. 509–535.

Bebiano, R., D. Camotim, and N. Silvestre (2013). "Dynamic analysis of thin-walled members using Generalised Beam Theory (GBT)". In: *Thin-Walled Structures* 72.0, pp. 188 –205. ISSN: 0263-8231.

Benscoter, S. (1954). "A Theory of Torsion Bending for Multicell Beams". In: *Journal of Applied Mechanics* 21.1, pp. 25–34.

Berdichevsky, V.L. (1976). "Equations of the theory of anisotropic inhomogeneous rods". In: *Dokl. Akad. Nauk* 228, 558561.

Berdichevsky, V.L., E. Armanios, and A. Badir (1992). "Theory of anisotropic thin-walled closed-cross-section beams". In: *Composites Engineering* 2.5-7, pp. 411–432.

Bernoulli, D. (1751). "Commentarii Academiae Scientiarum Imperialis Petropolitanae". In: Petropoli. Chap. De vibrationibus et sono laminarum elasticarum.

Biscani, F., G. Giunta, S. Belouettar, E. Carrera, and H. Hu (2011). "Variable kinematic beam elements coupled via Arlequin method". In: *Composite Structures* 93. doi: 10.1016/j.compstruct.2010.08.009, 697–708.

Bognet, B., F. Bordeu, F. Chinesta, A. Leygue, and A. Poitou (2012). "Advanced simulation of models defined in plate geometries: 3D solutions with 2D computational complexity". In: *Computer Methods in Applied Mechanics and Engineering* 201–204. doi: 10.1016/j.cma.2011.08.025, pp. 1–12.

Bognet, B., A. Leygue, and F. Chinesta (2014). "Separated representations of 3D elastic solutions in shell geometries". In: *Advanced Modeling and Simulation in Engineering Sciences* 1.4. doi: 10.1186/2213-7467-1-4.

Carrera, E. (2002). "Theories and finite elements for multilayered, anisotropic, composite plates and shells". In: *Archives of Computational Methods in Engineering* 9.2. doi: 10.1007/BF02736649, pp. 87–140.

Carrera, E. (2003). "Theories and finite elements for multilayered plates and shells: a unified compact formulation with numerical assessment and benchmarking". In: *Archives of Computational Methods in Engineering* 10.3. doi: 10.1007/BF02736224, pp. 216–296.

Carrera, E. and M. Filippi (2014). "Variable Kinematic One-Dimensional Finite Elements for the Analysis of Rotors Made of Composite Materials". In: *Journal of Engineering for Gas Turbines and Power* 136.9. doi: 10.1115/1.4027192.

Carrera, E. and G. Giunta (2010). "Refined beam theories based on a unified formulation". In: *International Journal of Applied Mechanics* 2.1. doi: 10.1142/S1758825110000500, pp. 117–143.

Carrera, E. and F. Miglioretti (2012). "Selection of appropriate multilayered plate theories by using a genetic like algorithm". In: *Composite Structures* 94. DOI: 10.1016/j.compstruct.2011.10.013, pp. 1175–1186.

Carrera, E. and A. Pagani (2013). "Analysis of reinforced and thin-walled structures by multi-line refined 1D/beam models". In: *International Journal of Mechanical Sciences* 75. doi: 10.1016/j.ijmecsci.2013.07.010, 278–287.

Carrera, E. and A. Pagani (2014a). "Free Vibration Analysis of Civil Engineering Structures by Component-Wise Models". In: *Journal of Sound and Vibration*. In Press, doi: 10.1016/j.jsv.2014.04.063.

Carrera, E. and A. Pagani (2014b). "Multi-line enhanced beam model for the analysis of laminated composite structures". In: *Composites: Part B* 57. doi: 10.1016/j.compositesb.2013.09.046, pp. 112–119.

Carrera, E. and M. Petrolo (2010). "Guidelines and Recommendations to Construct Theories for Metallic and composite plates". In: *AIAA Journal* 48.12. doi: 10.2514/1.J050316, pp. 2852–2866.

Carrera, E. and M. Petrolo (2011). "On the Effectiveness of Higher-Order Terms in Refined Beam Theories". In: *Journal of Applied Mechanics* 78. doi: 10.1115/1.4002207.

Carrera, E. and M. Petrolo (2012a). "Refined Beam Elements with only Displacement Variables and Plate/Shell Capabilities". In: *Meccanica* 47.3. doi: 10.1007/s11012-011-9466-5, pp. 537–556.

Carrera, E. and M. Petrolo (2012b). "Refined One-Dimensional Formulations for Laminated Structure Analysis". In: *AIAA Journal* 50.1. doi: 10.2514/1.J051219, pp. 176–189.

Carrera, E. and A. Varello (2012). "Dynamic response of thin-walled structures by variable kinematic one-dimensional models". In: *Journal of Sound and Vibration* 331.24. doi: 10.1016/j.jsv.2012.07.006, 5268–5282.

Carrera, E. and E. Zappino (2014). "Aeroelastic Analysis of Pinched Panels in Supersonic Flow Changing with Altitude". In: *Journal of Spacecraft and Rockets* 51.1. doi: 10.2514/1.A32363, pp. 187–199.

Carrera, E., G. Giunta, and M. Petrolo (2010a). "A Modern and Compact Way to Formulate Classical and Advanced Beam Theories". In: ed. by B.H.V. Topping, J.M. Adam, F.J. Pallars, R. Bru, and M.L. Romero. doi: 10.4203/csets.25.4. Saxe-Coburg Publications, Stirlingshire, UK. Chap. 4, pp. 75–112.

Carrera, E., G. Giunta, P. Nali, and M. Petrolo (2010b). "Refined beam elements with arbitrary cross-section geometries". In: *Computers and Structures* 88.5–6. doi: 10.1016/j.compstruc.2009.11.002, pp. 283–293.

Carrera, E., G. Giunta, and M. Petrolo (2011a). *Beam Structures: Classical and Advanced Theories*. doi: 10.1002/9781119978565. John Wiley & Sons. ISBN: 978-0-470-97200-7.

Carrera, E., M. Petrolo, and P. Nali (2011b). "Unified formulation applied to free vibrations finite element analysis of beams with arbitrary section". In: *Shock and Vibration* 18. doi: 10.3233/SAV20100528, pp. 485–502.

Carrera, E., A. Pagani, M. Petrolo, and E. Zappino (2012a). "A Component-Wise Approach in Structural Analysis". In: *Computational Methods for Engineering Science*. Ed. by B. H. V. Topping. doi: 10.4203/csets.30.4. Saxe-Coburg Publications. Chap. 4, pp. 75–115.

Carrera, E., M. Petrolo, and A. Varello (2012b). "Advanced Beam Formulations for Free Vibration Analysis of Conventional and Joined Wings". In: *Journal of Aerospace Engineering* 24.2. doi: 10.1061/(ASCE)AS.1943-5525.0000130, 282–293.

Carrera, E., M. Maiarú, and M. Petrolo (2012c). "Component-Wise Analysis of Laminated Anisotropic Composites". In: *International Journal of Solids and Structures* 49. doi: 10.1016/j.ijsolstr.2012.03.025, pp. 1839–1851.

Carrera, E., F. Miglioretti, and M. Petrolo (2012d). "Computations and evaluations of higher-order theories for free vibration analysis of beams". In: *Journal of Sound and Vibration* 331. doi: 10.1016/j.jsv.2012.04.017, 4269–4284.

Carrera, E., M. Petrolo, and E. Zappino (2012e). "Performance of CUF approach to analyze the structural behavior of slender bodies". In: *Journal of Structural Engineering* 138.2. doi: 10.1061/(ASCE)ST.1943-541X.0000402, pp. 285–297.

Carrera, E., M. Maiarú, M. Petrolo, and G. Giunta (2013a). "A refined 1D element for the structural analysis of single and multiple fiber/matrix cells". In: *Composite Structures* 96. doi: 10.1016/j.compstruct.2012.09.012, 455–468.

Carrera, E., A. Varello, and L. Demasi (2013b). "A refined structural model for static aeroelastic response and divergence of metallic and composite wings". In: *CEAS Aeronautical Journal* 4.2. doi: 10.1007/s13272-013-0063-2, 175–189.

Carrera, E., M. Filippi, and F. Zappino (2013c). "Analysis of Rotor Dynamic by One-Dimensional Variable Kinematic Theories". In: *Journal of Engineering for Gas Turbines and Power* 135.9. doi: 10.1115/1.4024381.

Carrera, E., F Biscani, S. Belouettar, and G. Giunta (2013d). "Analysis of thin-walled beams via a one-dimensional unified formulation through a Navier-type solution". In: *International Journal of Applied Mechanics* 3.3. doi: 10.1142/S1758825111001056 pp. 407–434.

Carrera, E., E. Zappino, and M. Petrolo (2013e). "Analysis of Thin-Walled Structures With Longitudinal and Transversal Stiffeners". In: *Journal of Applied Mechanics* 80. doi: 10.1115/1.4006939.

Carrera, E., A. Pagani, and M. Petrolo (2013f). "Classical, Refined and Component-wise Theories for Static Analysis of Reinforced-Shell Wing Structures". In: *AIAA Journal* 51.5. doi: 10.2514/1.J052331, pp. 1255–1268.

Carrera, E., A. Pagani, and M. Petrolo (2013g). "Component-wise Method Applied to Vibration of Wing Structures". In: *Journal of Applied Mechanics* 80.4. Paper No: JAM-12-1198, doi:10.1115/1.4007849.

Carrera, E., M. Filippi, and F. Zappino (2013h). "Free vibration analysis of laminated beam by polynomial, trigonometric, exponential and zig-zag theories". In: *Journal of Composite Materials*. doi: 10.1177/0021998313497775.

Carrera, E., M. Filippi, and F. Zappino (2013i). "Free vibration analysis of rotating composite blades via Carrera Unified Formulation". In: *Composite Structures* 106. doi: 10.1016/j.compstruct.2013.05.055, pp. 317–325.

Carrera, E., E. Zappino, and M. Filippi (2013j). "Free Vibration Analysis of Thin-Walled Cylinders Reinforced With Longitudinal and Transversal Stiffeners". In: *Journal of Vibration and Acoustics* 135. doi: 10.1115/1.4007559.

Carrera, E., M. Filippi, and F. Zappino (2013k). "Laminated beam analysis by polynomial, trigonometric, exponential and zig-zag theories". In: *European Journal of Mechanics A/Solids* 41. doi: 10.1016/j.euromechsol.2013.02.006, pp. 58–69.

Carrera, E., A. Pagani, and M. Petrolo (2013l). "Use of Lagrange multipliers to combine 1D variable kinematic finite elements". In: *Computers and Structures* 129. doi: 10.1016/j.compstruc.2013.07.005, 194–206.

Carrera, E., E. Zappino, K. Patoĉka, M. Komarek, A. Ferrarese, M. Montabone, B. Kotzias, B. Huermann, and R. Schwane (2014a). "Aeroelastic analysis of Versatile Thermal Insulation (VTI) panels with pinched boundary conditions". In: *CEAS Space Journal* 6. doi: 10.1007/s12567-013-0054-5, pp. 23–35.

Carrera, E., M. Cinefra, M. Petrolo, and E. Zappino (2014b). "Comparisons between 1D (Beam) and 2D (Plate/Shell) Finite Elements to Analyze Thin-Walled Structures". In: *Aerotecnica Missili e Spazio*. In Press.

Carrera, E., M. Cinefra, M. Petrolo, and E. Zappino (2014c). *Finite Element Analysis of Structures through Unified Formulation*. John Wiley & Sons. ISBN: 978-1-119-94121-7.

Carrera, E., A. Pagani, and M. Petrolo (2014d). "Refined 1D Finite Elements for the Analysis of Secondary, Primary and Complete Civil Engineering Structures". In: *Journal of Structural Engineering*. In Press, doi: 10.1061/(ASCE)ST.1943-541X.0001076.

Carrera, E., A. Pagani, and F. Zangallo (2014e). "Thin-walled beams subjected to load factors and non-structural masses". In: *International Journal of Mechanical Sciences* 81. doi: 10.1016/j.ijmecsci.2014.02.015, pp. 109–119.

Catapano, A., G. Giunta, S. Belouettar, and E. Carrera (2011). "Static analysis of laminated beams via a unified formulation". In: *Composite Structures* 94. doi: 10.1016/j.compstruct.2011.07.015, 75–83.

Chen, H.H. and K.M. Hsiao (2007). "Coupled axial-torsional vibration of thin-walled Z-section beam induced by boundary conditions". In: *Thin-Walled Structures* 45.6, pp. 573–583.

Cicala, P. (1965). *Systematic approximation approach to linear shell theory*. Torino: Levrotto e Bella.

Cowper, G.R. (1966). "The Shear Coefficient in Timoshenko's Beam Theory". In: *Journal of Applied Mechanics* 33.2, pp. 335–340.

Da Vinci, L. (1493). *Codex Madrid*. Vol. I.

Davies, JM. and P. Leach (1994). "First-order generalised beam theory". In: *Journal of Constructional Steel Research* 31.2-3, 187220.

Davies, JM., P. Leach, and D. Heinz (1994). "Second-order generalised beam theory". In: *Journal of Constructional Steel Research* 31.2-3, 221241.

Dinis, P., D. Camotim, and N. Silvestre (2006). "GBT formulation to analyse the buckling behaviour of thin-walled members with arbitrarily "branched" open cross-sections". In: *Thin-Walled Structures* 44.1, pp. 20–38.

El Fatmi, R. (2007a). "A non-uniform warping theory for beams". In: *Comptes Rendus Mcanique* 335.8, pp. 467–474.

El Fatmi, R. (2007b). "Non-uniform warping including the effects of torsion and shear forces. Part I: A general beam theory". In: *International Journal of Solids and Structures* 44.18-19, pp. 5912–5929.

El Fatmi, R. (2007c). "Non-uniform warping including the effects of torsion and shear forces. Part II: Analytical and numerical applications". In: *International Journal of Solids and Structures* 44.18-19, pp. 5930–5952.

Euler, L. (1744). "De curvis elasticis". In: Bousquet. Chap. Methodus Inveniendi Lineas Curvas Maximi Minimive Proprietate Gaudentes, Sive Solutio Problematis Isoperimetrici Lattissimo Sensu Accept.

Ferradi, M.K., X. Cespedes, and M. Arquier (2013). "A higher order beam finite element with warping eigenmodes". In: *Engineering Structures* 46, pp. 748–762.

Flügge, W. (1960). *Stresses in shells*. 2nd. Springer, Berlin.

Giunta, G., S. Belouettar, and E. Carrera (2010). "Analysis of FGM Beams by Means of Classical and Advanced Theories". In: *Mechanics of Advanced Materials and Structures* 17. doi: 10.1080/15376494.2010.518930, 622–635.

Giunta, G., D. Crisafulli, S. Belouettar, and E. Carrera (2011). "Hierarchical theories for the free vibration analysis of functionally graded beams". In: *Composite Structures* 94. doi: 10.1016/j.compstruct.2011.07.016, 68–74.

Giunta, G., D. Crisafulli, S. Belouettar, and E. Carrera (2013a). "A thermo-mechanical analysis of functionally graded beams via hierarchical modelling". In: *Composite Structures* 95. doi: 10.1016/j.compstruct.2012.08.013, 676–690.

Giunta, G., N. Metla, S. Belouettar, A.J.M. Ferreira, and E. Carrera (2013b). "A thermo-mechanical analysis of isotropic and composite beams via collocation with radial basis functions". In: *Journal of Thermal Stress* 36. doi: 10.1080/01495739.2013.819 1169–1199.

Giunta, G., Y. Koutsawa, and S. Belouettar (2013c). "Analysis of Three-Dimensional Piezo-Electric Beams via a Unified Formulation". In: *SMART13: Smart Materials and Structures*. Ed. by E. Carrera, M. Cinefra, F. Miglioretti, and M. Petrolo. doi: 10.4028/www.scientific.net/AMR.745.101. Trans Tech Publications, pp. 101–118.

Giunta, G., F. Biscani, S. Belouettar, A.J.M. Ferreira, and E. Carrera (2013d). "Free vibration analysis of composite beams via refined theories". In: *Composites: Part B* 44. doi: 10.1016/j.compositesb.2012.03.005, 540–552.

Giunta, G., N. Metla, Y. Koutsawa, and S. Belouettar (2013e). "Free vibration and stability analysis of three-dimensional sandwich beams via hierarchical models". In: *Composites: Part B* 47. doi: 10.1016/j.compositesb.2012.11.017, 326–338.

Giunta, G., Y. Koutsawa, S. Belouettar, and H. Hu (2013f). "Static, free vibration and stability analysis of three-dimensional nano-beams by atomistic refined models accounting for surface free energy effect". In: *International Journal of Solids and Structures* 50. doi: 10.1016/j.ijsolstr.2013.01.025, 1460–1472.

Goncalves, R. and D. Camotim (2004). "GBT local and global buckling analysis of aluminium and stainless steel columns". In: *Computers and Structures* 82, 14731484.

Goncalves, R. and D. Camotim (2007). "Thin-walled member plastic bifurcation analysis using generalised beam theory". In: *Advances in Engineering Software* 38, 637646.

Gruttmann, F. and W. Wagner (2001). "Shear correction factors in Timoshenko's beam theory for arbitrary shaped cross-sections". In: *Computational Mechanics* 27, pp. 199–207.

Gruttmann, F., R. Sauer, and W. Wagner (2000). "Theory and numerics of three-dimensional beams with elastoplastic material behaviour". In: *International Journal of Numerical Methods in Engineering* 48.12, pp. 1675–1702.

Ibrahim, S.M., E. Carrera, M. Petrolo, and E. Zappino (2012a). "Buckling of composite thin walled beams by refined theory". In: *Composite Structures* 94.2. doi: 10.1016/j.compstruct.2011.08.020, pp. 563–570.

Ibrahim, S.M., E. Carrera, M. Petrolo, and E. Zappino (2012b). "Buckling of thin-walled beams by a refined theory". In: *Journal of Zhejiang University-SCIENCE A (Applied Physics & Engineering)* 13.10. doi: 10.1631/jzus.A1100331, pp. 747–759.

Kapania, K. and S. Raciti (1989a). "Recent Advances in Analysis of Laminated Beams and Plates, Part I: Shear Effects and Buckling". In: *AIAA Journal* 27.7, pp. 923–935.

Kapania, K. and S. Raciti (1989b). "Recent Advances in Analysis of Laminated Beams and Plates, Part II: Vibrations and Wave propagation". In: *AIAA Journal* 27.7, pp. 935–946.

Koutsawa, Y., G. Giunta, and S. Belouettar (2013). "Hierarchical FEM modelling of piezo-electric beam structures". In: *Composite Structures* 95. doi: 10.1016/j.compstruct.2012.08.008, 705–718.

Koutsawa, Y., G. Giunta, and S. Belouettar (2014). "A free vibration analysis of piezo-electric beams via hierarchical one-dimensional finite elements". In: *Journal of Intelligent Material Systems and Structures*. In Press, doi: 1045389X13502870.

Ladevéze, P. (1999). *Nonlinear Computational Structural Mechanics*. Springer. ISBN: 978-1-4612-1432-8.

Ladéveze, P. and J. Simmonds (1996). "De nouveaux concepts en théorie des poutres pour des charges et des géométries quelconques". In: *Comptes Rendus Acad. Sci. Paris* 332, pp. 445–462.

Ladéveze, P., P. Sanchez, and J. Simmonds (2004). "Beamlike (Saint-Venant) solutions for fully anisotropic elastic tubes of arbitrary closed cross section". In: *Internatinal Journal of Solids & Structures* 41.7. doi: 10.1016/j.ijsolstr.2003.11.006, pp. 1925–1944.

Ladevze, P. and J. Simmonds (1998). "New concepts for linear beam theory with arbitrary geometry and loading". In: *European Journal of Mechanics - A/Solids* 17.3, pp. 377–402.

Leach, P. and J.M. Davies (1996). "An experimental verification of the generalized beam theory applied to interactive buckling problems". In: *Thin-Walled Structures* 25.1, pp. 61 –79. ISSN: 0263-8231.

Librescu, L. and O. Song (1992). "On the static aeroelastic tailoring of composite aircraft swept wings modelled as thin-walled beam structures". In: *Composites Engineering* 2, pp. 497–512.

Lubliner, J. (1990). *Plasticity Theory*. London: Macmillan Publishers.

Mashat, D.S., E. Carrera, A.M. Zenkour, S.A. Al Khateeb, and M. Filippi (2014). "Free vibration of FGM layered beams by various theories and finite elements". In: *Composites: Part B* 59. doi: 10.1016/j.compositesb.2013.12.008, 269–278.

Miglioretti, F., E. Carrera, and M. Petrolo (2014). "Variable kinematic beam elements for electro-mechanical analysis". In: *Smart Structures and Systems* 13.4. doi: 10.12989/sss.2014.13.4.517, pp. 517–546.

Mucichescu, D.T. (1984). "Bounds for stiffness of prismatic beams". In: *Journal of Structural Engineering* 110, pp. 1410–1414.

Novozhilov, V. V. (1961). *Theory of Elasticity*. Pergamon Press.

Oñate, E. (2009). *Structural Analysis with the Finite Element Method: Linear Statics, Volume 1*. Springer.

Pagani, A., M. Boscolo, J. R. Banerjee, and E. Carrera (2013). "Exact Dynamic Stiffness Elements based on One-Dimensional Higher-Order Theories for Free Vibration Analysis of Solid and Thin-Walled Structures". In: *Journal of Sound and Vibration* 332.23. doi: 10.1016/j.jsv.2013.06.023, pp. 6104–6127.

Pagani, A., M. Petrolo, and E. Carrera (2014a). "Flutter analysis by refined 1D dynamic stiffness elements and doublet lattice method". In: *Advances in Aircraft and Spacecraft Science* 1.3. doi: 10.12989/aas.2014.1.3.291, pp. 291–310.

Pagani, A., F. Zangallo, and E. Carrera (2014b). "Influence of Non-Structural Localized Inertia on Free Vibration Response of Thin-Walled Structures by Variable Kinematic Beam Formulations". In: *Shock and Vibration* 2014. Article ID 141982, doi: 10.1155/2014/141982.

Pagani, A., E. Carrera, M. Boscolo, and J. R. Banerjee (2014c). "Refined dynamic stiffness elements applied to free vibration analysis of generally laminated composite beams with arbitrary boundary conditions". In: *Composite Structures* 110. doi: 10.1016/j.compstruct.2013.12.010, 305–316.

Petrolo, M. (2012). "Advanced 1D Structural Models for Flutter Analysis of Lifting Surfaces". In: *International Journal of Aeronautical and Space Sciences* 13.2. doi: 10.5139/IJASS.2012.13.2.199, 199–209.

Petrolo, M. (2013). "Flutter analysis of composite lifting surfaces by the 1D Carrera Unified Formulation and the doublet lattice method". In: *Composite Structures* 95. doi: 10.1016/j.compstruct.2012.06.021, 539–546.

Petrolo, M., E. Zappino, and E. Carrera (2012). "Refined free vibration analysis of one-dimensional structures with compact and bridge-like cross-sections". In: *Thin-Walled Structures* 56. doi: 10.1016/j.tws.2012.03.011, pp. 49–61.

Prokić, A. (1993). "Thin-walled beams with open and closed cross-sections". In: *Computers & Structures* 47.6, pp. 1065–1070.

Prokić, A. (1996a). "New warping function for thin-walled beams. I: II: Finite Element Method and Applications". In: *Journal of Structural Engineering* 122.12, pp. 1443–1452.

Prokić, A. (1996b). "New warping function for thin-walled beams. I: Theory". In: *Journal of Structural Engineering* 122.12, pp. 1437–1442.

Qin, Z. and L. Librescu (2002). "On a shear-deformable theory of anisotropic thin-walled beams: further contribution and validations". In: *Composite Structures* 56, pp. 345–358.

Reddy, J.N., C.M. Wang, and K.H. Lee (1997). "Relationships between bending solutions of classical and shear deformation theories". In: *International Journal of Solids and Structures* 34.26, pp. 3373–3384.

Saint-Venant, A. de (1856a). "Mèmoire sur la flexion des prismes". In: *Journal de Mathèmatiquespures et appliquès* 1, pp. 89–189.

Saint-Venant, A. de (1856b). "Mèmoire sur la Torsion des Prismes". In: *Acadèmie des Sciences de l'Institut Impèrial de Frances* 14, pp. 233–560.

Sapountzakis, E.J. (2000). "Solution of non-uniform torsion of bars by an integral equation method". In: *Computers and Structures* 77.6, pp. 659–667.

Sapountzakis, E.J. and V.G. Mokos (2003). "Warping shear stresses in nonuniform torsion by BEM". In: *Computational Mechanics* 30.2, pp. 131–142.

Sapountzakis, E.J. and V.G. Mokos (2006). "Dynamic analysis of 3-D beam elements including warping and shear deformation effects". In: *International Journal of Solids and Structures* 43.22-23, pp. 6707–6726.

Sapountzakis, E.J. and V.M. Protonotariou (2008). "A displacement solution for transverse shear loading of beams using the boundary element method". In: *Computers and Structures* 86.7-8, pp. 771–779.

Sapountzakis, E.J. and V.J. Tsipiras (2010). "Warping shear stresses in nonlinear nonuniform torsional vibrations of bars by BEM". In: *Engineering Structures* 32.3, pp. 741–752.

Schardt, R. (1966). "Eine Erweiterung der Technischen Biegetheorie zur Berechnung prismatischer Faltwerke". In: *Der Stahlbau* 35, pp. 161–171.

Schardt, R. (1989). *Verallgemeinerte technische biegetheorie*. Springer Verlag.

Schardt, R. (1994a). "Generalized beam theory-an adequate method for coupled stability problems". In: *Thin-Walled Structures* 19, pp. 161–180.

Schardt, R. (1994b). "Lateral torsional and distortional buckling of channel and hat-sections". In: *Journal of Constructional Steel Research* 31, 243265.

Schardt, R. and D. Heinz (1991). "Structural Dynamics". In: ed. by et al. (Eds.) W. Kra tzig. Balkema, Rotterdam. Chap. Vibrations of thin-walled prismatic structures under simultaneous static load using generalized beam theory, pp. 921–927.

Silvestre, N. (2002). "Second-order generalised beam theory for arbitrary orthotropic materials". In: *Thin-Walled Structures* 40.9, pp. 791–820.

Silvestre, N. (2007). "Generalised beam theory to analyse the buckling behaviour of circular cylindrical shells and tubes". In: *Thin-Walled Structures* 45.2, pp. 185–198.

Silvestre, N. and D. Camotim (2002). "First-order generalised beam theory for arbitrary orthotropic materials". In: *Thin-Walled Structures* 40.9, pp. 791–820.

Sokolnikoff, I. S. (1956). *Mathematical Theory of Elasticity*. New York: McGraw-Hill.

Stojek, D. (1964). "Zur schubverformung in biegebalken". In: *ZAMM* 44, pp. 393–396.

Timoshenko, S. P. (1922a). "On the corrections for shear of the differential equation for transverse vibrations of prismatic bars". In: *Philosophical Magazine* 41, pp. 744–746.

Timoshenko, S. P. (1922b). "On the transverse vibrations of bars of uniform cross section". In: *Philosophical Magazine* 43, pp. 125–131.

Timoshenko, S.P. and J.N. Goodier (1970). *Theory of elasticity*. New York: McGraw-Hill.

Umanskij, A.A. (1939). *Kručenije i izgib tonkostennykh aviokon-strukcij*. (in Russian). Moskva: Oborongiz.

Varello, A. and E. Carrera (2014). "Nonhomogeneous atherosclerotic plaque analysis via enhanced 1D structural models". In: *Smart Structures and Systems* 13.4. doi: 10.12989/sss.2014.13.4.659, pp. 659–683.

Varello, A., E. Carrera, and L. Demasi (2011). "Vortex Lattice Method Coupled with Advanced One-Dimensional Structural Models". In: *Journal of Aeroelasticity and Structural Dynamics* 2.2. doi: 10.3293/asdj.2011.10, 53–78.

Varello, A., A. Lamberti, and E. Carrera (2013). "Static Aeroelastic Response of Wing-Structures Accounting for In-Plane Cross-Section Deformation". In: *International Journal of Aeronautical and Space Sciences* 14.4. doi: 10.5139/IJASS.2013.14.4.310 310–323.

Vidal, P., L. Gallimard, and O. Polit (2012). "Composite beam finite element based on the Proper Generalized Decomposition". In: *Computers and Structures* 102–103. doi: 10.1016/j.compstruc.2012.03.008, pp. 76–86.

Vlasov, V. Z. (1961). *Thin-walled elastic beams*. Washington: National Science Foundation.

Volovoi, V.V., D.H. Hodges, V.L. Berdichevsky, and V.G. Sutyrin (1999). "Asymptotic theory for static behavior of elastic anisotropic I-beams". In: *International Journal of Solid Structures* 36.7, pp. 1017–1043.

Wackerfuß, J. and F. Gruttmann (2011). "A nonlinear Hu-Washizu variational formulation and related finite-element implementation for spatial beams with arbitrary moderate thick cross-sections". In: *Computer Methods in Applied Mechanics and Engineering* 200.17-20, pp. 1671–1690.

Wagner, W. and F. Gruttmann (2001). "Finite element analysis of Saint-Venant torsion problem with exact integration of the elastic-plastic constitutive equations". In: *Computer Methods in Applied Mechanics and Engineering* 190.29-30, pp. 3831–3848.

Wang, Q. and W. Yu (2014). "A Variational Asymptotic Approach for Thermoelastic Analysis of Composite Beams". In: *Advances in Aircraft and Spacecraft Sciences* 1.1, pp. 93–123.

Washizu, K. (1968). *Variational Methods in Elasticity and Plasticity*. Oxford: Pergamon.

Yoon, K. and P.-S. Lee (2014). "Modeling the warping displacements for discontinuously varying arbitrary cross-section beams". In: *Computers & Structures* 131, pp. 56–69.

Yu, W. and D.H. Hodges (2004). "Elasticity Solutions Versus Asymptotic Sectional Analysis of Homogeneous, Isotropic, Prismatic Beams". In: *Journal of Applied Mechanics* 71, pp. 15–23.

Yu, W. and D.H. Hodges (2005). "Generalized Timoshenko Theory of the Variational Asymptotic Beam Sectional Analysis". In: *Journal of the American Helicopter Society* 50.1, pp. 46–55.

Yu, W., V.V. Volovoi, D.H. Hodges, and X. Hong (2002). "Validation of the variational asymptotic beam sectional analysis (VABS)". In: *AIAA Journal* 40.10, pp. 2105–2113.