POLITECNICO DI TORINO
Repository ISTITUZIONALE

Preliminary Analysis Of Interaction Among Gears, Tines And Soil In A Rotary Harrow

Original
Preliminary Analysis Of Interaction Among Gears, Tines And Soil In A Rotary Harrow / Raparelli, T.; Eula, G.; Ivanov, A.; Pepe, G.; Ricauda Aimonino, D.. - In: INTERNATIONAL JOURNAL OF MECHANICS AND CONTROL. - ISSN 1590-8844. - ELETTRONICO. - 20:1(2019), pp. 81-92.

Availability:
This version is available at: 11583/2771114 since: 2019-12-03T17:23:36Z

Publisher:
Levrotto and Bella

Published
DOI:

Terms of use:

This article is made available under terms and conditions as specified in the corresponding bibliographic description in the repository

Publisher copyright

(Article begins on next page)

12 October 2024

ISSN 1590-8844
Vol. 20 No. 01
2019

International Journal of Mechanics and Control

Editor: Andrea Manuello Bertetto

Scopus Indexed Journal

Reference Journal of IFToMM Italy
International Federation for the Promotion
of Mechanism and Machine Science

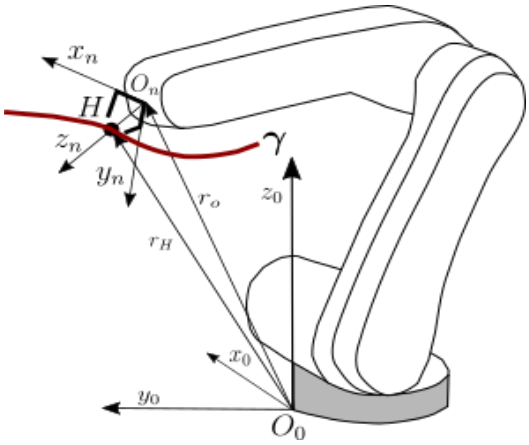

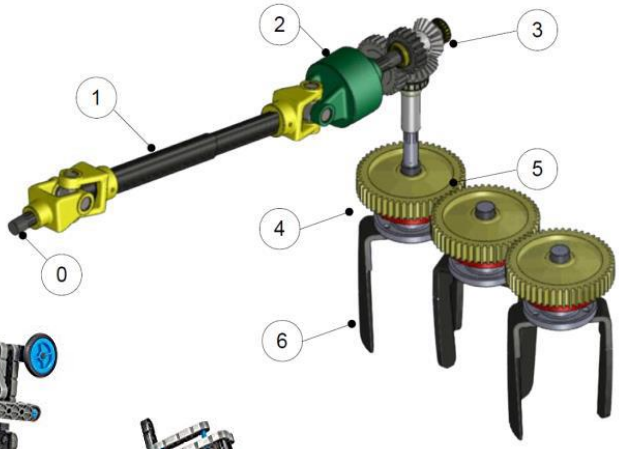

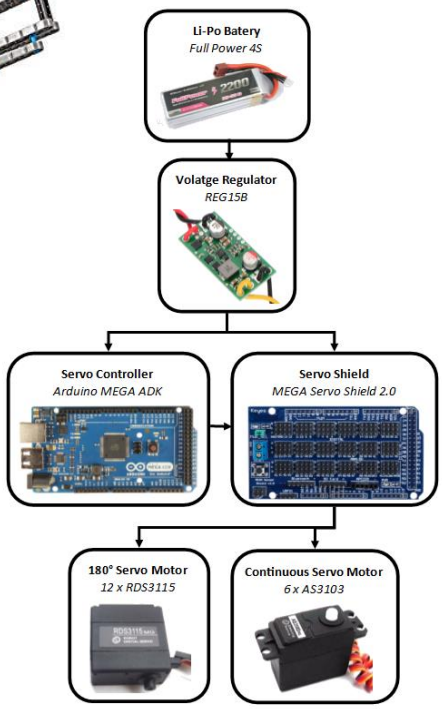

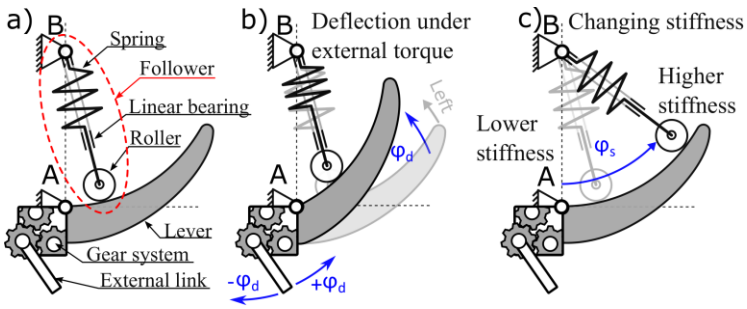

LIBRERIA EDITRICE UNIVERSITARIA
LEVROTTO & BELLA
TORINO

International Journal of Mechanics and Control

Associate Editors

Published by Levrotto&Bella – Torino – Italy E.C.

Honorary editors
Guido Belforte **Kazuo Yamafuji**

Editor: **Andrea Manuello Bertetto**

General Secretariat: **Matteo D. L. Dalla Vedova**

Mario Acevedo
Universidad Panamericana
Mexico City – Mexico

Elvio Bonisoli
Politecnico di Torino
Torino – Italy

Giovanni Boschetti
University of Padova
Vicenza – Italy

Luca Bruzzone
Università degli Studi di Genova
Genova – Italy

Giuseppe Carbone
University of Cassino
Cassino – Italy

Marco Ceccarelli
University of Cassino
Cassino – Italy

Francesca Di Puccio
University of Pisa
Pisa – Italy

Carlo Ferraresi
Politecnico di Torino
Torino – Italy

Walter Franco
Politecnico di Torino
Torino – Italy

Rafael Lopez Garcia
University of Jaen
Jaen – Spain

Viktor Glazunov
Mechanical Engineering Research Institute of the Russian Academy of Sciences (IMASH RAN)
Moscow – Russia

Kenji Hashimoto
Waseda University
Tokyo – Japan

Giovanni Jacazio
Politecnico di Torino
Torino – Italy

Juan Carlos Jauregui Correa
Universidad Autonoma de Queretaro
Queretaro – Mexico

Paolo Maggiore
Politecnico di Torino
Torino – Italy

Paolo Emilio Lino Maria Pennacchi
Politecnico di Milano
Milano – Italy

Giuseppe Quaglia
Politecnico di Torino
Torino – Italy

Aleksandar Rodic
Institute Mihajlo Pupin
Belgrade – Serbia

Mauro Velardocchia
Politecnico di Torino
Torino – Italy

Renato Vidoni
Free University of Bolzano
Bolzano – Italy

Ion Visa
Transilvania University of Brasov
Brasov – Romania

Jaroslav Zapomel
VSB - Technical University of Ostrava
Ostrava - Czech Republic

Leon Zlajpah
Jozef Stefan Institute
Ljubljana – Slovenia

Official Torino Italy Court Registration
n. 5390, 5th May 2000

Deposito presso il Tribunale di Torino
n. 5390 del 5 maggio 2000

Direttore responsabile:
Andrea Manuello Bertetto

International Journal of Mechanics and Control

Editor: **Andrea Manuello Bertetto**

Honorary editors: **Guido Belforte**
Kazuo Yamafuji

General Secretariat: **Matteo D. L. Dalla Vedova**

The Journal is addressed to scientists and engineers who work in the fields of mechanics (mechanics, machines, systems, control, structures). It is edited in Turin (Northern Italy) by Levrotto&Bella Co., with an international board of editors. It will have not advertising.

Turin has a great and long tradition in mechanics and automation of mechanical systems. The journal would will to satisfy the needs of young research workers of having their work published on a qualified paper in a short time, and of the public need to read the results of researches as fast as possible.

Interested parties will be University Departments, Private or Public Research Centres, Innovative Industries.

Aims and scope

The *International Journal of Mechanics and Control* publishes as rapidly as possible manuscripts of high standards. It aims at providing a fast means of exchange of ideas among workers in Mechanics, at offering an effective method of bringing new results quickly to the public and at establishing an informal vehicle for the discussion of ideas that may still in the formative stages.

Language: English

International Journal of Mechanics and Control will publish both scientific and applied contributions. The scope of the journal includes theoretical and computational methods, their applications and experimental procedures used to validate the theoretical foundations. The research reported in the journal will address the issues of new formulations, solution, algorithms, computational efficiency, analytical and computational kinematics synthesis, system dynamics, structures, flexibility effects, control, optimisation, real-time simulation, reliability and durability. Fields such as vehicle dynamics, aerospace technology, robotics and mechatronics, machine dynamics, crashworthiness, biomechanics, computer graphics, or system identification are also covered by the journal.

Please address contributions to

Prof. Andrea Manuello Bertetto
PhD Eng. Matteo D. L. Dalla Vedova

Dept. of Mechanical and Aerospace Engineering
Politecnico di Torino
C.so Duca degli Abruzzi, 24.
10129 - Torino - Italy - E.C.

www.jomac.it
e_mail: jomac@polito.it

Subscription information

Subscription order must be sent to
the publisher:

Libreria Editrice Universitaria
Levrotto&Bella
C.so Luigi Einaudi 57/c – 10129 Torino – Italy

www.levrotto-bella.net
e_mail: info@levrotto-bella.net
ph.: +39 011 4275423
mob.: +39 328 5369063
fax: +39 011 4275425

International Journal of Mechanics and Control

Scientific Board

Published by Levrotto&Bella – Torino – Italy E.C.

Atlas Akhmetzyanov
V.A. Trapeznikov Institute of Control Sciences
of Russian Academy of Sciences
Moscow – Russia

Domenico Appendino
Prima Industrie
Torino – Italy

Kenji Araki
Saitama University
Saitama – Japan

Amalia Ercoli Finzi
Politecnico di Milano
Milano – Italy

Anindya Ghoshal
Arizona State University
Tempe – Arizona – USA

Nunziatino Gualtieri
Space System Group, Alenia Spazio
Torino – Italy

Alexandre Ivanov
Politecnico di Torino
Torino – Italy

Roberto Ricciu
Università di Cagliari
Cagliari – Italy

Matteo Davide Lorenzo Dalla Vedova
Politecnico di Torino
Torino - Italy

Takashi Kawamura
Shinshu University
Nagano – Japan

Kin Huat Low
School of Mechanical and Aerospace Engineering
Nanyang Technological University
Singapore

Stamos Papastergiou
Jet Joint Undertaking
Abingdon – United Kingdom

Mihailo Ristic
Imperial College
London – United Kingdom

Jànos Somlò
Technical University of Budapest
Budapest – Hungary

Jozef Suchy
Faculty of Natural Science
Banska Bystrica – Slovakia

Federico Thomas
Instituto de Robótica e Informática Industrial
Barcelona – Espana

Vladimir Viktorov
Politecnico di Torino
Torino – Italy

Official Torino Italy Court Registration
n. 5390, 5th May 2000

Deposito presso il Tribunale di Torino
n. 5390 del 5 maggio 2000

Editor in Chief

Direttore responsabile:
Andrea Manuello Bertetto

ISSN 1590-8844
International Journal of Mechanics and Control, Vol. 20, No. 01, 2019

PRELIMINARY ANALYSIS OF INTERACTION AMONG GEARS, TINES AND SOIL IN A ROTARY HARROW

T. Raparelli* G. Eula* A. Ivanov* G. Pepe* D. Ricauda Aimonino**

* Department of Mechanical and Aerospace Engineering – Politecnico di Torino – Torino, Italy

** Department of Agricultural, Forestry and Food Sciences – University of Torino - Torino, Italy

ABSTRACT

This study concerns the preliminary analysis of a rotary harrow. It is analysed both from a kinematic and a structural point of view. The analysis focuses particularly on the force exchanged between the tine and the soil, drawing on scientific literature relating to the subject. Based on this force, a structural analysis is therefore carried out on the harrow tine and there is an analysis of the forces acting on the rotors connected to the tines. By creating parametric spreadsheets, it aims to outline a future method of study which will enable various geometries of harrows to be analysed quickly under different work conditions. The preliminary results obtained are satisfactory with reference to the resistance tests of the elements analysed and useful for the future study of the implement.

Keywords: rotary harrow; soil and rotary harrow interaction; kinematics of rotary harrow.

1 INTRODUCTION

This study falls within the ambit of a PRIN project (Progetti di ricerca di rilevante interesse nazionale- bando 2015 “Ottimizzazione di macchine operatrici attraverso l’analisi del profilo di missione per un’agricoltura più efficiente” (durata 2017-2020) (Research projects of significant national interest - notification 2015 “Optimization of operating machinery through analysis of the mission profile for more efficient agriculture”) (duration 2017-2020) which refers to the optimization of some operating machines including the rotary harrow. The Authors’ experience in the agricultural machinery and automation sector has developed over the years concentrating in particular on studies of pesticide spraying in confined settings [1], grippers and fruit picking [2] and in the area of automated machinery for grafting tomatoes [3]. In each sector quoted here, the study has led to the construction and operation of innovative prototypes which are suitable for the associated purposes.

Contact author: Gabriella Eula[1]

[1]Dept. of Mechanical and Aerospace Engineering
E-mail: gabriella.eula@polito.it

There is a desire to develop new technologies to increase the level of efficiency of some types of agricultural machinery, in particular the rotary harrow, in order to reduce operating and maintenance costs, to make the machinery more efficient and reliable and to extend its life. The project is based on an analysis of the performance of the rotary harrow when applied on different types of soil and with different speeds of rotation and forward speed of the tractor. It focuses on an analysis of the forces exchanged between the harrow tine and the soil during tillage and on the level of finish of the soil which can be achieved under different work conditions. A harrow is an implement generally used in secondary tillage, in order to prepare the soil for sowing after ploughing or chiseling, on no-tilled soil in minimum tillage practices or for burying of crop residues. These processes are often associated with the upper layer of soil, without the loose soil being turned over. The work carried out by the harrow on the soil is very important because it has an influence on subsequent sowing operations and therefore also on creating the best growth conditions for the crop. This type of implement can be towed or linked to the tractor by the three-point hitch. Work on the soil is carried out by machines which can generally be divided into two categories: passive and active. While passive harrows are not equipped with bodies with their own motor (e.g. disc harrows, fixed teeth harrows, drag and chain harrows),

active machines use the tractor power take off to operate the movement of their working bodies to till soil, such as rotary harrows. Important factors when using it are its weight and the movement of the tines, provided by the tractor's power take off (PTO) [4-5].

It is important to keep under control any compacting of the soil by the tractor so as not to increase the force required to break up the soil during the operation and hence place stress on the implement being used [6-10]. The cutting depth of the rotary harrow is assessed according to the conditions of the soil to be tilled in order to achieve the best possible tillage [11]. Various factors influence the achievable performance when tilling with the harrow. These include the type of soil and its composition, the level of compacting, the moisture content of the soil, the cutting depth during tilling, the forward speed of the tractor, the rotation speed of the tool and its geometry [12-13].

When studying a harrow, it is very important to assess the exchange of force between tool and soil, which depends on the type of soil and condition of use of the harrow itself. Naturally, all the factors involved during the process, such as the cutting depth, the forward speed of the tractor, the angular speed of the harrow rotors, its connection angle, soil consistency and texture as well as the quantity of soil which accumulates on the front of the tool, are very important when assessing the actions exchanged between the tool and the soil, therefore, in the assessment of the stresses placed on the tool itself. All these factors must be properly monitored to have a complete and accurate understanding of what is happening to the implement and to achieve the best level of finish of the soil [14].

This study also relates to the analysis of the forces which arise in the transmission chain from the tractor's power take off to the tines of the rotary harrow, as well as to the study of the resistance of the tines during the various phases of work. It has drawn on formulae contained in existing written material which are useful in calculating the force exchanged between the tine and the soil [15-16]. In this way, it has been possible to calculate the actions affecting the harrow tines during operation and, from these, to detect the forces arising on the various components of the transmission. Experimental tests were carried on using a torque transducer in order to detect the torque transmitted on the tool during its working phase.

The results shown in this paper are fully obtained from calculation and research done by the Authors. These are useful for a possible improvement in the design of a rotary harrow. Spreadsheets have been also produced to enable a fast and complete analysis of the stresses on the different models and geometries of a rotary harrow. The main sections of the paper are:

- a kinematic analysis of the motion of the harrow tines;
- the bending test of the gear wheel of the rotor based on experimental measurements of forces arising in transmission;
- a survey of the real geometry of a harrow tine;
- an analysis of the exchange of forces between the tine and the soil according to the specific scientific literature;
- the bending and cutting test of the harrow tines;
- an analysis of the stresses which arise on the rotors according to the force exchanged with the soil and determined by the scientific literature in this area.

2 KINEMATIC ANALYSIS

An example of the rotary harrow model examined is shown in Figure 1. It consists mainly of a transmission trough which contains the rotors that holding the harrow tines [17].

Figure 1 Example of a rotary harrow examined.

The Figure 2, on the other hand, illustrates the transmission chain from the PTO of the tractor to the rotary harrow.

It consists of an attachment for the PTO (0), a cardan shaft (1), a safety joint (2), a speed reducer (3), a series of rotors (4) inserted in the transmission trough (5) to which are connected the harrow tines (6) which are constructed with a special geometry to till the soil better.

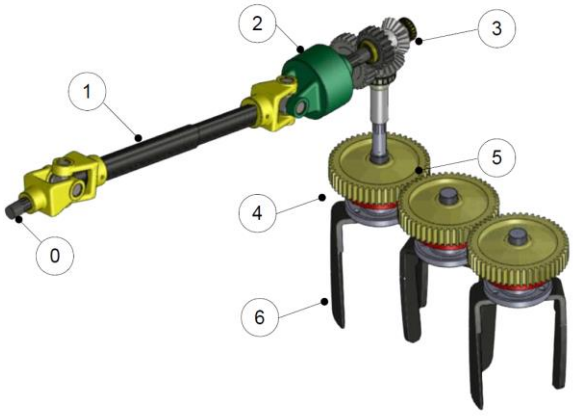

Figure 2 Transmission from the PTO to the harrow tines.

From a kinematic point of view, the harrow tine is subject to a compound motion consisting of the pulling speed (the forward speed of the tractor) V and the relative speed (rotation speed of the tine around the axis of the rotor to which it is rigidly attached) ω. The combination of these two motions produces the prolate trochoid curves described by the tines on the soil and these curves are used to study

the tines cutting effect. In particular, the different paths developed by the tines are analysed in the present work as a function of V and ω.

2.1 ANALYSIS OF THE TINES TRAJECTORIES

This study also relates to the analysis of the path of the harrow tool during operation. The equations of the motion in the coordinates x,y for the point of the tine furthest from the axis of rotation of the rotor, in a clockwise rotation ($\omega<0$), are:

$$x = V \cdot t + R \cdot \cos(\omega \cdot t + \varphi) \quad (1)$$

$$y = R \cdot \sin(\omega \cdot t + \varphi) \quad (2)$$

where: V forward speed (m/s), t time (s), R external tine radius (m), ω rotor speed (rad/s), φ_0 initial angular position of the tine (rad). When N tines are mounted on a rotor, the phase is changed $\varphi = \varphi_0 + 2\pi n/N$ with n = 1,2,…,N-1 and for two tines on the rotor $\varphi = \varphi_0 + \pi$.

The Authors underline that the units of the parameters involved in the following figures are chosen in order to obtain the best visualization of the curves for the readers.

The trajectory of the tines at various values of V and ω can be traced by equation (1) and (2). In the following figures, the trajectories of two tines (red and blue) considered in the diagram (x,y) as the projection of points in motion, are illustrated. Figure 3 illustrates the trajectories of two tines at a forward speed of 2.5 km/h, PTO rotational speed of 540 rpm, R=0.125 m and an overall transmission ratio of the gear unit, situated between the cardan shaft and the transmission trough where the rotors with the harrow tines are mounted, of 1.78.

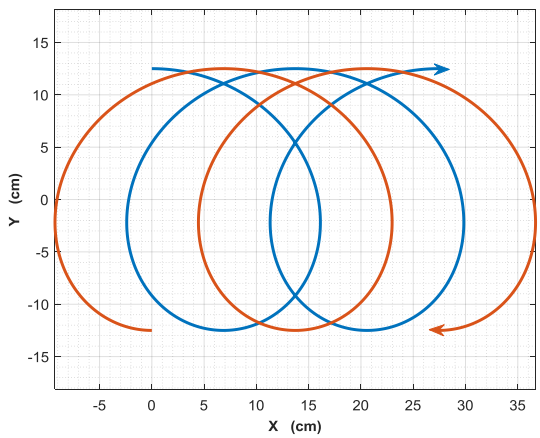

Figure 3 Trajectory of the two tines at a forward speed of V=2.5 km/h and rotor speed of 304 rpm.

Figure 4 shows the tracks of the two tines which form a single "shaving", or a single removal of soil. As can be seen in Figure 4, the layer cut on every half turn has a thickness not exceeding 7 cm in width. If the thickness of the tine is taken into account, in relation to work done by the tines, a good quality of tilling on an untilled soil can be expected.

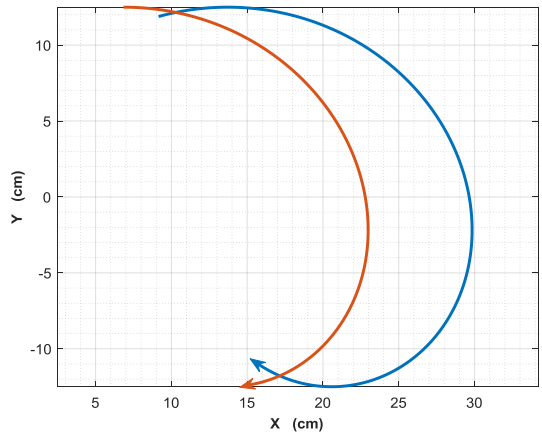

Figure 4 "Shaving" at a forward speed of V=2.5 km/h and rotor speed of 304 rpm.

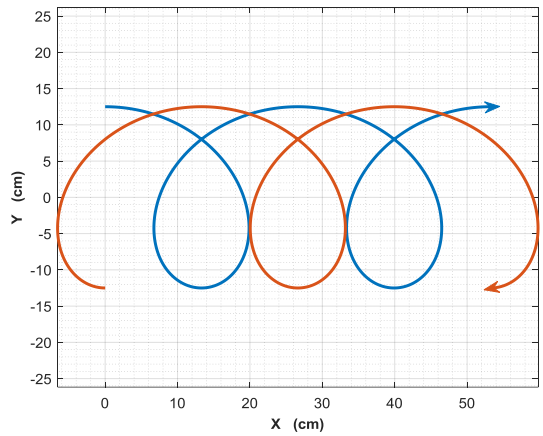

Figure 5 Trajectories of the two tines at the forward speed of V=4.85 km/h and rotor speed of 304 rpm.

Figure 5 shows the trajectories of the tines at a forward speed of V=4.85 km/h. This work condition represents the speed limit when a separate shaving is created on every half turn, this shape of shaving is shown in Figure 6.

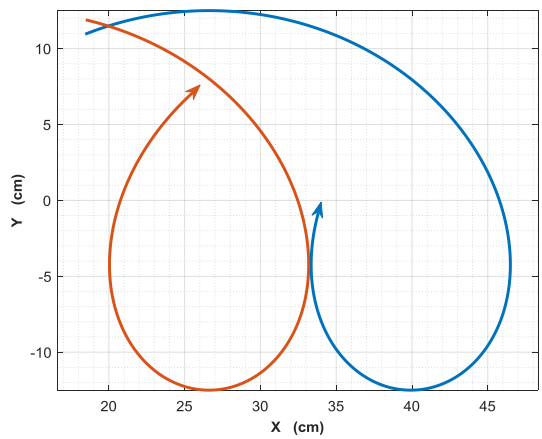

Figure 6 "Shaving" at a forward speed of V=4.85 km/h and rotor speed of 304 rpm.

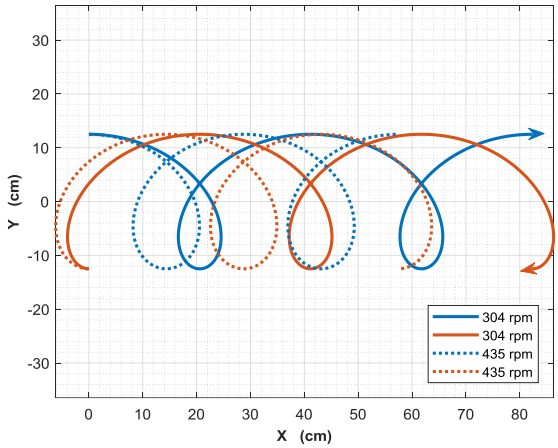

Figure 7 Trajectory of the two tines at a forward speed of V=7.5 km/h and rotor speed variable.

If speed V increases, the maximum thickness of the shaving increases more or less proportionally. As can be seen from the Figure 5, the layer cut has a maximum thickness equating to 13 cm. When the speed exceeds the limit of 4.85 km/h, the thickness of the shaving is no more uniform as the dimension of the clods is increasing in some areas while decreasing in others, as shown in Figure 7 referring to the speed of 7.5 km/h and rotor speed of 304 rpm.
Figure 7 shows also the tines trajectory in the presence of a rotor speed of 435 rpm. This rotational speed was chosen according to the experimental one. In this case, it is possible to observe that increasing the rotor speed lead to more homogeneous soil clods.

3 TEETH BENDING STRENGTH CALCULUS OF GEARS DRIVING THE HARROW TINE

Figure 8 shows an example of the transmission box which contains the gears of the rotors that are the object of the study in this paragraph. On the basis of initial preliminary tests carried out in the field, a study of bending resistance of the gear wheel teeth of the harrow rotors has been performed according to [18-19]. The type and the parameters of the gear wheels in the transmission box are shown in Table I.

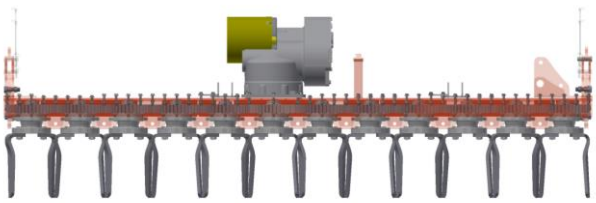

Figure 8 Transmission trough of a rotary harrow.

In March 2017, in collaboration with the University of Turin (Department of Agricultural, Forestry and Food Sciences), field tests were carried out.

Table I – Geometry of the gear wheels

Parameters	Numerical value
number of teeth z	40
module m (mm)	6
pressure angle α (°)	20
pitch diameter D_p (mm)	240
face width b (mm)	45

A torque transducer was installed between the PTO and the cardan shaft to measure the torque absorbed by the rotary harrow during soil tillage. In addition, a speed sensor is mounted on the transmission shaft to detect and record the rotation speed. The tests are performed with PTO speed set at 540 rpm, recording the transmitted torque values for various soil conditions (no tilled, ploughed) and different tractor forward speed. Table II shows the results obtained from these tests.
The type of soil on which the tests were carried out is clay soil with a high moisture content which is due to the spring rain. The trials have been carried out on two different conditions of soil: “no tilled” soil, that is an area of ground which has not been tilled for at least three months; and “ploughed” soil.
In these tests, the used rotary harrow has 10 rotors and is characterized by a rotor diameter of 250 mm which also represents the maximum distance between two tines. Moreover, the transmission ratio between the PTO and the input shaft of the transmission box of the rotors is 1.24. The peripheral velocity of the tines is evaluated and the results are presented in Table II.
From the analysis of the results of these tests it is possible to observe that, for the same condition of the soil (“ploughed”), the measured torque increases when the tractor forward speed increases. In particular, at the speed of 7.5 km/h, maximum tractor speed, the measured torque is equal to 1165 Nm. Moreover, similar torque values are required for the processing of a “no tilled” soil, but the tractor speed is equal to half. The torque necessary for the soil tillage depends on the condition of the ground and also on the tractor forward speed. In fact, with the increase in tractor speed, the impact of the tooth with the soil is greater.

3.1 CALCULATION OF FORCES TRANSMITTED IN THE GEARS

The force exchanged between the gear wheels, present inside the transmission trough and which transmit the motion to the rotors, is evaluated. For this calculation the experimental test characterized by the highest value of the exchanged torque is taken into consideration. Moreover, the efficiency of the speed reducer is assumed to be unitary while the transmission ratio is 1.24.
The maximum value recorded of transmitted torque by the PTO is 1165 Nm, see Table II, this corresponds to a torque of 1446 Nm available at transmission trough input shaft (C_{in}).

Table II - Values obtained from the first experimental trials carried out

Type of soil	Forward speed (km/h)	Average torque (Nm)	PTO speed (rpm)	Rotor speed (rpm)	Peripheral speed (m/s)
no tilled	2.5	962	540	435	5.7
ploughed	7.5	1165	555	447	5.9
ploughed	5.0	947	570	459	6.0

In this work the soil is assumed perfectly homogeneous. Therefore, the resistive torque (C_{res}) due to the interaction of the tines with the soil is equal on all the rotors. The evaluation of the force exchanged between the teeth of the gear wheels of the rotors is necessary for the subsequent resistant test.

It can be supposed that during the soil tilling the rotor connected to the motored rotor (rotor 5 of Figure 2) meets a rock or a root which stops its rotation. So all the torque is exchanged between the toothed wheels fixed at these two rotors and the gears see only one contact point. In this hypothesized condition the force exchanged were analysed in a resistance test, ensuring a conservative approach. Therefore, the tangential force is equal to 12052 N and the radial force is equal to 4386 N. This approach is meant to simulate an overload condition of the teeth at the rotors gear wheels [20].

3.2 BENDING RESISTANCE TEST OF THE TRANSMISSION TROUGH GEAR WHEELS.

The transmission trough gears must be tested carefully taking many factors into consideration, both from the point of view of their operating conditions and of their geometry.

In this paper the bending test of the teeth of the wheels fixed to harrow's rotors is carried out in accordance with [18-19].

For this analysis, the standard procedure requires the evaluation of many coefficients to evaluate a bending stress that takes into account all geometric and operating factors. These parameters are extracted from corresponding tables and graphs, and summarized in Table III.

In accordance with [18-19] the calculation of the bending stress is carried out using this formula:

$$\sigma = F_t K_0 K_v K_s \frac{1}{bm} \frac{K_H K_B}{Y_J} \tag{3}$$

where:

- σ bending stress (MPa);
- F_t tangential transmitted force (N);
- K_0 coefficient of overload;
- K_v dynamic factor;
- K_S size factor
- m module (mm);
- b width of the face (mm);
- K_H coefficient of load distribution;
- K_B rim-thickness factor;
- Y_J geometric factor for bending strength.

The result of the calculation of this bending stress is:

$$\sigma = F_t K_0 K_v K_s \frac{1}{bm} \frac{K_H K_B}{Y_J} = 254\ MPa \tag{4}$$

Table III - Values of calculated Coefficients

Coefficient	Value
K_0	1.25
K_B	1.0
K_v	1.44
K_H	1.21
K_S	1.057
F_t (N)	12052
Y_J	0.405
m (mm)	6
b (mm)	45

The bending stress σ value obtained must be compared with the allowable bending stress (fully corrected bending strength). This is characteristic of the material with which the gear wheel is constructed and depends on other correction parameters shown in Table IV. In accordance to [18-19] the allowable bending stress value is evaluated with this formula:

$$\sigma_{all} = \frac{\sigma_{FP}}{S_F} \frac{Y_N}{Y_\theta Y_Z} \tag{5}$$

where:

- σ_{all} allowable bending stress (MPa);
- σ_{FP} bending strength (MPa);
- S_F factor of safety, bending;
- Y_N stress cycle factor for bending stress;
- Y_θ coefficient of temperature;
- Y_Z coefficient of reliability.

The σ_{FP} bending strength is obtained through tables and graphs on the basis of material properties and heat treatment carried out on the steel of the gear wheel. In this case, the teeth undergo a surface hardening by carburizing and a tempering treatment which guarantees an HRC range of 56-61. According to [18-19] the σ_{FP} bending strength is 380 MPa.

Table IV - Parameters for the calculation of S_F

Parameters	Value
σ_{FP} (MPa)	380
σ (MPa)	254
Y_N	0.911
Y_θ	1
Y_Z	0.85

Therefore, it is possible to calculate the safety factor from formula (5)

$$S_F = \frac{\sigma_{FP}}{\sigma} \frac{Y_N}{Y_\theta Y_Z} = 1.6 \quad (6)$$

In the standard procedure the safety factor is defined as a coefficient which takes into consideration the characteristics of the material and the safety risk for a person in case of failure. The standard procedure also states that a universal reference value for S_F does not exist, because it must be assessed on a case by case basis depending on the area of application.

There are no readily available numerical values in scientific literature with which to compare the results achieved, in order to be able to evaluate the present case.

Nevertheless, an analogous example of application in terms of power transmitted is cited by a manufacturer where the gear units comply with a minimum bending fatigue safety factor of 1.25 for the nominal torque transmission. In this example, the material (18NiCrMo5) and the heat treatment carried out (hardening and tempering) are very similar to those of the harrow gear wheels examined here.

As the value of S_F calculated is greater than the minimum stated by the gear unit manufacturer mentioned, the results achieved can be considered valid. It is therefore concluded that the value of S_F = 1.6 may be acceptable for the application in question because it guarantees the durability and effectiveness of the transmission over time.

4 EXPERIMENTAL SURVEY OF THE GEOMETRY OF A ROTARY HARROW TINE

In order to gain an in-depth knowledge of the geometry of the rotary harrow tine in question, some surveys of dimensions have been done on an actual tine.

The tines of a rotary harrow can be angled according to two types of use:

- external angle to penetrate hard soil;
- internal angle to limit the stones and clumps rising up;

The geometry of the rotary harrow tine is not a simple vertical one. It is fairly complex and the product of long studies to improve the tine-soil contact and the effectiveness of breaking up the soil by the tine during operation.

Looking at an actual tine of a rotary harrow some geometric surveys have been done which have enabled a drawing of it to scale in Figure 9. This drawing is important for gaining a detailed knowledge of the geometry of this harrow tine and for then proceeding with a study of the stresses which arise on it when the soil is tilled.

The internal angle of the tine has been estimated from ratios made directly on the tine itself with an angle of 5-6°.

The harrow tine of Figure 9, also known as a knife, is made of forged steel. The tool has a wear resistant coating applied on its surface at the height of the cutting edge consisting of a metallic alloy reinforced by chromium and tungsten carbides to preserve the tine, to increase its average life and to decrease significantly its deterioration during usage periods.

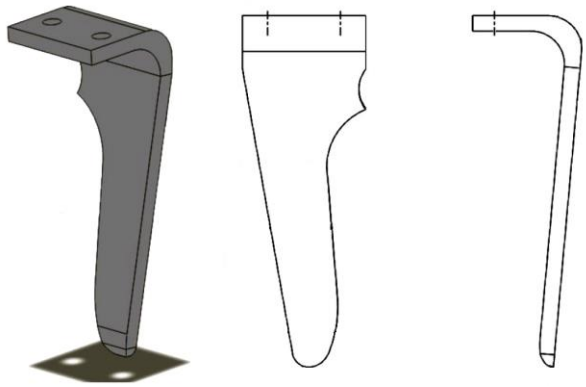

Figure 9 Tine of a rotary harrow.

5 CALCULATION OF THE FORCE EXCHANGED WITH THE SOIL

Knowing the geometry of the tine and its material, a study of the stresses exchanged between the tine and the soil has been made. The study in particular addresses the search for formulae able to assess the stress arising between the tine and the soil during operation, depending on the characteristics of the soil, the speeds used, the type of implement and the depth of cut.

Based on this analysis, and therefore on the stresses exchanged with the soil, both the load torque which arises on the rotors of the harrow tines and the stress that the soil places on the individual tine during operation, can be calculated [19][21-22].

Figure 10 shows the harrow tines in contact with the soil and therefore subject to a load torque.

In order to study and calculate the actions which arise on the rotary harrow tines while tilling the soil (Figure 10) a number of useful formulae have been sought from existing written material [16][23-25].

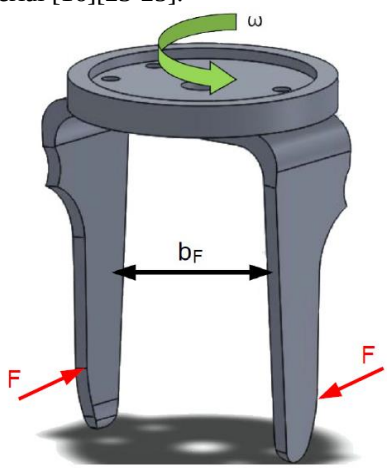

Figure 10 Harrow rotor with tines and actions exchanged with the soil.

The force between the tines and the soil during tilling for a rotary harrow is very complex to be estimated, but a first order approximation can be obtained considering the model of interaction between tillage machines and soil introduced in the next paragraph.

5.1 CALCULATION OF THE FORCE EXCHANGED WITH THE SOIL BASED ON THE ASAE

The formula examined and used to calculate the action exchanged between the tine and the soil comes from a scientific research study by the ASAE for certain agricultural machines [23]. Based on specific parameters of the machine and of the soil, this study has developed a general mathematical model used for designing suitable machinery for tilling the land and for sowing.

According to [23], the force between the implement and the soil has been calculated thanks to the formula:

$$D = F_i \cdot \left(A + B \cdot S + C \cdot S^2\right) \cdot W \cdot T \tag{7}$$

where:

- D total force on the implement (N);
- F_i a dimensionless soil texture parameter;
- i is 1 for soils with a fine texture, 2 for soils with an average texture, 3 for soils with a rough texture;
- A, B, C specific parameters of the implement;
- S speed range (km/h);
- W width of the implement (m);
- T depth of cut (cm).

This model has been used first to study a major tillage operation with an offset disk harrow, which at an operating level closely resembles the rotary harrow in question.

In the case examined here, parameters are:

- $F_i = 1$;
- $A = 254$;
- $B = 13.2$;
- $C = 0$;
- $S = 7.5$ km/h;
- $W = 2.5$ m;
- $T = 15$ cm.

The numerical values shown here have been chosen on the basis of:

- F_i, A, B, C for offset disk harrow [23];
- $S = 7.5$ km/h tractor speed of the test analysed;
- $W = 2.5$ m, width of the rotary harrow analyzed;
- $T = 15$ cm, value of working depth chosen according to the average range which varies from 5 cm to 15 cm for a rotary harrow.

The numerical values of cutting depth and forward speed of the machine are a direct consequence of what is desired from the operation and the available power, with each different condition (type of ground, moisture content etc.) resulting in adjustments of the different parameters.

The resulting value of the force required is $D = 13238$ N.

The resistant force D for the rotary harrow was calculated by analogy with an offset disk harrow. D is therefore the net force exchanged between the harrow and the soil. Dividing D by the number of tines, 20 for the rotary harrow studied, it is found that the force which each tine exchanges with the soil equates to F = 662 N/tine. This theoretical value is compared with the equivalent one derived from the measured torque, by using the entire mechanics transmission model in paragraph 7.

6 CALCULATION OF THE STRESSES ON THE ROTARY HARROW TINE

Having calculated the force F, which any tine exchanges with the soil, a resistance test can be carried out. In this preliminary analysis the harrow tine has been modelled as a beam with an uniform rectangular cross section fixed at one end, as shown in Figure 11. This assumption is necessary as the real geometry of the rotary harrow tine is very complex, with a lots of changes in the angles of its inclination along its length. So it is important, in this preliminary step of the study, to use a simplified tine geometry to help the analysis of the stresses in the tine during its work in the soil, with an easy and reliable model for the tine geometry and with a basic method for the calculus.

As can be seen in Figure 11 the analyzed beam has been approximated with a rectangle (red) with a width b corresponding to the minimum of the tine of the rotary harrow. The geometrical dimensions are: l=320 mm, b=50 mm and h=15mm. A further dimensional configuration has been analyzed; in this case the width of the beam b^* has been assumed equal to the actual width of the tine in the constrained section. The geometrical dimensions are: l=320 mm, b^*=110 mm and h=15mm, rectangle blue in Figure 11.

This preliminary simplified approach is done in order to improve the Authors knowledge on the interaction between tines and soil as the follow step of the research will be the study between different kinds of soil and the rotary harrow tines using a specific modelling simulation.

The connection of the tine to the rotor is simulated using an ideal clamp, whereas in reality the tine is attached to the supporting structure by clamp bolts.

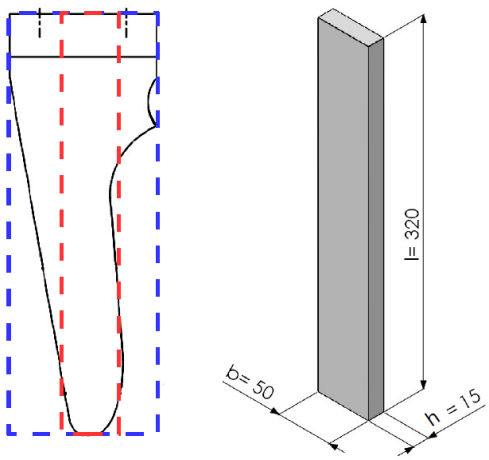

Figure 11 Geometry of the tine and simplified geometry (dimensions are in mm).

It is assumed that force F exchanged with the ground is applied both on the thickness of the tine and on the rectangular facing side, because the tine rotating during tilling does not always present the same side to the resistant action by the soil. Furthermore, since the majority of harrows work with a cutting depth between 50 and 150 mm, and assuming a maximum possible working depth of 150 mm, force F has been set for now at 75 mm from the point of the fixed bar simulating a tine, that is, half the depth that the tine goes into the ground.
Figure 12 shows the general outline of the fixed bracket loaded with force F examined here as well as diagrams of the bending moment and cutting respectively.

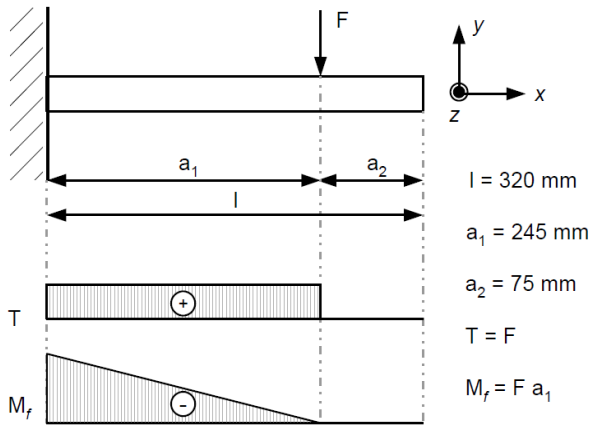

Figure 12 Tine shown as a bracket fixed at the edge.

The two configurations, A and B, differentiated according to the side on which force F is applied, are now analysed below for the red configuration (b dimension) of Figure 11.
In both the cases the load F is considered centred on the surface so that it only generates bending and cutting stresses. Therefore the resistance test considers only the bending and the cutting stresses.
Figure 13 (Configuration A) shows the first possible configuration where the tines are set up for cutting the ground with reduced force on the narrower side. In this configuration, the tine has a greater modulus of resistance W_z and, as a result, less stress is anticipated.
In Figure 15 (Configuration B), on the other hand, the tine is rotated 90°. In this case, the force is applied on the bigger section and has a much smaller modulus of resistance W_z than in the previous case. Therefore, the stress is expected to be much greater in this configuration.

Configuration A

In Configuration A, knowing the section's geometric dimensions, the bending resistance modulus W_z and the bending moment M_f, the normal effort is:

$$\sigma_{x,A}(y) = \frac{M_f}{W_z} = \frac{M_f}{\frac{h \cdot b^3}{12}} \cdot y \tag{8}$$

The tangential effort due to the cut is:

$$\tau_{yx,A}(y) = \frac{3}{2}\frac{T}{b \cdot h}\left(1 - 4\frac{y^2}{b^2}\right) \tag{9}$$

where T the value of the shear force calculated previously.

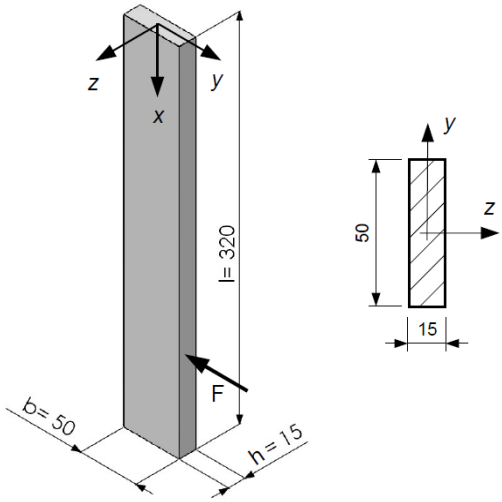

Figure 13 First loading condition of the tine (dimensions are in mm).

In Figure 14 it is possible to observe the normal and the tangential stress distributions in the constrained section of the beam, which is the most loaded. In this section, the highest stress is located at the coordinate y=b/2 [26].

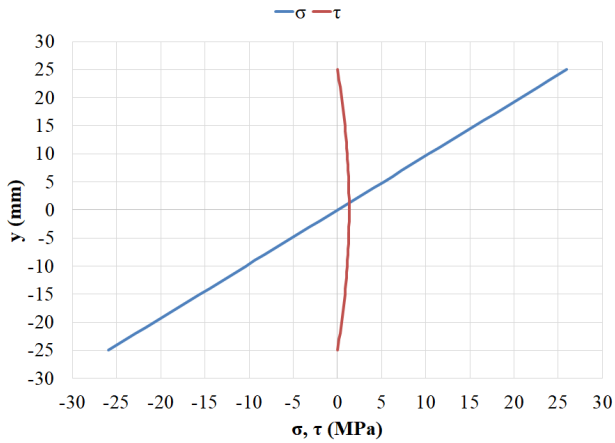

Figure 14 Configuration A: stress diagram at the constrained section.

In this point, the value of the normal and the tangential stresses are respectively:

$$\sigma_{x,A}\left(y = \frac{b}{2}\right) = \frac{M_f}{\frac{h \cdot b^3}{12}} \cdot y = 26 \ \ MPa \tag{10}$$

$$\tau_{yx,A}\left(y = \frac{b}{2}\right) = \frac{3}{2}\frac{T}{b \cdot h}\left(1 - 4\frac{y^2}{b^2}\right) = 0 \ \ MPa \tag{11}$$

Configuration B

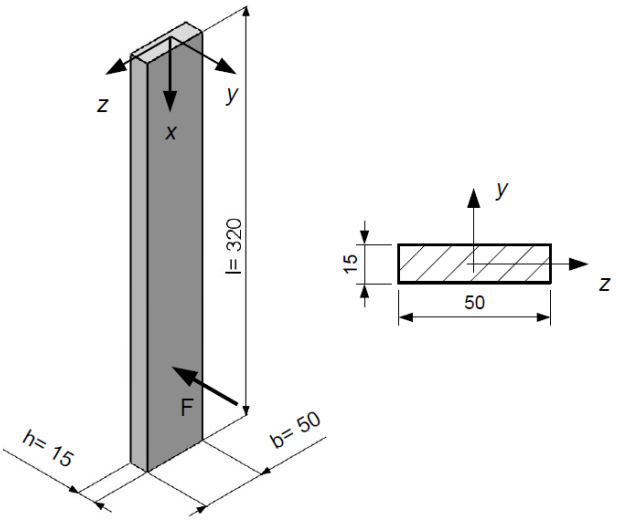

Figure 15 Second loading condition of the tine (dimensions are in mm).

In analogy to the configuration A analyzed above, the most stressed point of the constrained section is at coordinate *y=h/2* [26]; the value of the normal and the tangential stresses are respectively:

$$\sigma_{x,B}\left(y=\frac{h}{2}\right)=\frac{M_f}{\frac{b\cdot h^3}{12}}\cdot y=87\ \ MPa \tag{12}$$

$$\tau_{yx,B}\left(y=\frac{h}{2}\right)=\frac{3}{2}\frac{T}{b\cdot h}\left(1-4\frac{y^2}{h^2}\right)=0\ \ MPa \tag{13}$$

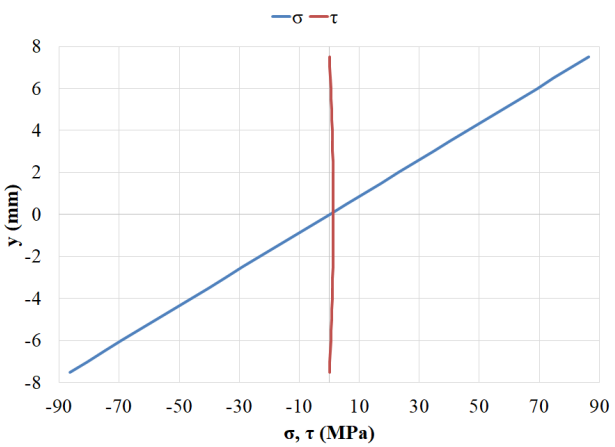

Figure 16 Configuration B: stress diagram at the constrained section.

As Configuration B is subject to greater stress, in this configuration the calculation of the *C.S.* (safety factor) is carried out starting with the calculation of the σ_{EQ} according to the Tresca hypothesis (or Hypothesis of the maximum tangential strain) for steels:

$$\sigma_{EQ}=\sqrt{\sigma_{x,B}^2+4\tau_{yx,B}^2}=87\ \ MPa \tag{14}$$

Choosing the material 42CrMo4 the values of ultimate tensile strength, yield strength and modulus of elasticity are:

ultimate tensile strength R_m = 1050 N/mm^2

yield strength $R_{p0.2}$ = 700 N/mm^2

modulus of elasticity E = 230000 N/mm^2

Then follows the calculation of safety factors:

$$C.S._{BREAKING}=\frac{R_m}{\sigma_{EQ}}=12.1 \tag{15}$$

$$C.S._{YIELD}=\frac{R_{p0.2}}{\sigma_{EQ}}=8.1 \tag{16}$$

reasonably high values which show good resistance of the material in the case being examined.

As regards the blue configuration (b^* dimension) of Figure 11, remember that now b^*=110 mm, the same previous considerations apply. On the basis of the previous analysis, also in this case the Configuration B is the most critical. The main results are:

$$\sigma_{x,B}\left(y=\frac{h}{2}\right)=\frac{M_f}{\frac{b^*\cdot h^3}{12}}\cdot y=39\ \ MPa \tag{17}$$

$$\tau_{yx,B}\left(y=\frac{h}{2}\right)=\frac{3}{2}\frac{T}{b^*\cdot h}\left(1-4\frac{y^2}{h^2}\right)=0\ \ MPa \tag{18}$$

$$\sigma_{EQ}=\sqrt{\sigma_{x,B}^2+4\tau_{yx,B}^2}=39\ \ MPa \tag{19}$$

$$C.S._{BREAKING}=\frac{R_m}{\sigma_{EQ}}=26.7 \tag{20}$$

$$C.S._{YIELD}=\frac{R_{p0.2}}{\sigma_{EQ}}=17.8 \tag{21}$$

The goal of this further analysis is to evaluate the stress state in the real constrained section of tine of the rotor. As expected, better results have been obtained in terms of resistance to stresses due to the interaction between the tool and the soil.

6.1 CREATION OF A PARAMETRIC SPREADSHEET

To have a general tool for calculations which can be used with different geometries of tine, different values of force exchanged with the ground and with a range of materials, a spreadsheet has been created which can address bending and cutting tests of the tine in question in terms of geometry, loading conditions and different materials.

Spreadsheet with 9 rotors

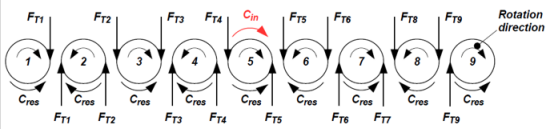

Calculation of the force between tine and ground

Draft Force D	*Number of Rotor*	*Number of tine*	*Force Tine-Ground*	*Distance Tine bF*	*Torque Cres*	*Effective Diameter dp*
(N)	(-)	(-)	(N)	(m)	(Nm)	(m)
17422,5	9	18	967,9	0,25	242,0	0,24

Rotor 1	Cres - Ft1(dp/2) = 0	Ft1 = Cres / (dp/2)	**Ft1**	**2016,5**	**N**
Rotor 2	Cres + Ft1(dp/2) - Ft2(dp/2) = 0	Ft2 = (Cres + Ft1(dp/2))/(dp/2)	**Ft2**	**4033,0**	**N**
Rotor 3	Cres + Ft2(dp/2) - Ft3(dp/2) = 0	Ft3 = (Cres + Ft2(dp/2))/(dp/2)	**Ft3**	**6049,5**	**N**
Rotor 4	Cres + Ft3(dp/2) - Ft4(dp/2) = 0	Ft4 = (Cres + Ft3(dp/2))/(dp/2)	**Ft4**	**8066,0**	**N**
Rotor 9	Cres - Ft8(dp/2) = 0	Ft8 = Cres / (dp/2)	**Ft8**	**2016,5**	**N**
Rotor 8	Cres + Ft8(dp/2) - Ft7(dp/2) = 0	Ft7 = (Cres + Ft8(dp/2))/(dp/2)	**Ft7**	**4033,0**	**N**
Rotor 7	Cres + Ft7(dp/2) - Ft6(dp/2) = 0	Ft6 = (Cres + Ft7(dp/2))/(dp/2)	**Ft6**	**6049,5**	**N**
Rotor 6	Cres + Ft6(dp/2) - Ft5(dp/2) = 0	Ft5 = (Cres + Ft6(dp/2))/(dp/2)	**Ft5**	**8066,0**	**N**
Rotor 5	Cres + Ft4(dp/2) + Ft5(dp/2) = Cin		**Cin**	**2177,8**	**Nm**

Figure 17 Extracts from the spreadsheet created for the analysis of the actions on the rotors of the transmission trough.

7 ACTIONS ON ROTORS OF THE ROTARY HARROW

In this paragraph the rotary harrow behaviour is studied starting from the interaction between tines and soil and analysing the forces among the rotors.

After calculating the force *F* that the ground applies on each harrow's tine (Figure 10), the overall torque C_{in} required for tilling the soil can be analysed.

In the paragraph 5.1 the force *F* exchanged between each tine of the rotary harrow and the soil is evaluated on the basis of [23] through a similarity with an offset disk harrow.

In these working conditions with forward speed *V*=7.5 km/h, the force *F* on each tine results to be *F*=662 N, so that the torque C_{in}=1655 Nm is necessary for tilling the soil.

In the same working conditions, the maximum torque value measured experimentally is 1165 Nm, see Table II, which corresponds to C_{in} = 1446 Nm available at rotor input shaft.

Therefore, in these conditions, assuming the soil perfectly homogeneous, the interaction force between the tine and the soil is estimated to be F = 578 N.

These force values are comparable to each other, so that it is reasonable to think that the proposed approximated computation, based on the scientific literature formulas for an offset disk harrow, is validated by comparison with experimental data.

The rotary harrow model analysed is intended for a tractor power range of 51-140 kW. The power required by the PTO evaluated by experimental data is 68 kW (PTO speed of 555 rpm), while it is equal to 77 kW if evaluated from the approximation with an offset disk harrow. These values are similar and fall in the range of a tractor power range. This further confirm the goodness of the proposed approximation.

The study was also done designing a specific spreadsheet where different geometries of rotary harrow can be analysed calculating the forces among the rotors using the torque required (or imposed) as input data in this part of the harrow. Some parts of the spreadsheet are shown in Figure 17.

8 CONCLUSION

The preliminary study presented here has been prepared based on kinematic considerations, on resistance tests of some parts of the harrow examined and on the creation of parametric spreadsheets suitable for use in studying different models of harrow in different loading conditions.

The assessment of the force applied by the soil on the harrow tine is drawn from scientific literature in this area and it is important for the purposes of assessing this force according to a range of parameters such as the soil finish obtained, the dimensions and type of implement used, the depth of cut, the speed of rotor rotation and the forward speed of the tractor. The results obtained are satisfactory with reference to the resistance tests of the parts examined. Furthermore, the good agreement between the proposed approximate calculation and the experimental data confirms the good accuracy of this proposed approximation to estimate the force exchanged between the soil and the tines. Future analyses will enable further in-depth study of the rotary harrows, their geometry and performance in various loading conditions with different types of soil.

AKNOWLEDGEMENTS

This study has been carried out under the ambit of the PRIN project: research projects of important national interest - notification 2015 "Ottimizzazione di macchine operatrici attraverso l'analisi del profilo di missione per un'agricoltura più efficiente" ("Optimization of operating machinery through analysis of the mission profile for more efficient agriculture") (duration 2017-2020).

We thank Prof. P.Gay, (Department of Agricultural, Forestry and Food Sciences) of the University of Turin, for his co-operation in the experimental tests here presented.

We would also like to thank the company Frandent Group s.r.l. for the support provided about the study of the rotary harrow considered in the present paper and the engineers P. Annecchini, A. Della Sala, G. Foglia and N. Filippi.

REFERENCES

[1] Belforte G., Eula G. and Raparelli T., DeVoPeS: Defined Volume Pesticide Sprayer design and testing. *Experimental Techniques*, November/December 2011, Vol. 35, No. 6, pp.14-26, 2011.

[2] Belforte G., Eula G., Raparelli T. and Turco G., Automatic table grape and kiwifruit harvester. *IMG04 Conference*, Genova, July 2004, pp.259-265, 2004.

[3] Belforte G., Eula G., Raparelli T., Sirolli S., Piccarolo P., Gay P., Ricauda Aimonino D. and Comba L., Robotic electropneumatic system for herbaceous grafting of tomatoes. *RAAD2017*, Torino (Italy), June 21-23, pp.255-263, 2017.

[4] *Sicurezza in agricoltura - Erpice Rotativo. Quaderni di prevenzione lavoro* - Regione Piemonte Assessorato alla Sanità, CONSIGLIO NAZIONALE DELLE RICERCHE Istituto per la Meccanizzazione Agricola, pp.1-10, ottobre 1997.

[5] Ahmadi I., A Torque calculator for rotary tiller using the laws of classical mechanics. *Soil & Tillage Research*, Vol.165, pp. 137-143, 2017.

[6] Jafari R., Sensitivity analysis of factors affecting on finite element analysis in soil-tool interaction. *Finite Differences – Finite elements – Finite volumes – Boundary elements (F – and B'08)*, Malta 11th -13th September, pp. 122-127, 2008.

[7] Ahmadi I., Development and assessment of a draft force calculator for disk plow using the laws of classical mechanics. *Soil & Tillage Research*, Vol. 163, pp.32-40, 2016.

[8] Ucgul M., Saunders C. and Fielke J.M., Discrete element modelling of tillage forces and soil movement of a one-third scale mouldboard plough. *Biosystems engineering*, 155, pp.44-54, 2017.

[9] Tsimba R., Hussein J. and Ndlovu L.R., *Relationships between depth of tillage and soil physical characteristics of sites farmed by smallholders in Mutoko and Chinyika in Zimbabwe*, published in Kaumbutho P G and Simalenga. T E (eds), 1999.

[10] Glancey J.L. and Upadhyaya S.K., An improved technique for agricultural implement draught analysis. *Soil & Tillage Research*, Vol.35, pp.175-182, 1995.

[11] CLEMENS & Co. GmbH Maschinenfabrik Rudolf-Diesel-Straße 8 D-54516 Wittlich/Mosel, *Rotary power harrow* – Instruction manual, Type TK 130, CLEMENS & Co. GmbH, 2000.

[12] Hirasawa K., Kataoka T. and Kubo T., Prediction and evaluation for leveling performance in rotary tiller, *4th IFAC Conference on Modelling and Control in Agriculture, Horticulture and Post Harvest Industry*, Espoo – Finland, August 27-30, Vol. 46, No.18, pp.315-320, 2013.

[13] Godwin R.J., A review of the effect of implement geometry on soil failure and implement forces. *Soil&Tillage Research*, Vol.97, pp.331-340, 2007.

[14] Mari I.A., Ji C., Chandio F.A., Arslan C., Sattar A. and Ahmad F., Spatial distribution of soil forces on moldboard plough and draft requirement operated in silty-clay paddy field soil. *Journal of Terramechanics*, Vol.60, pp.1-9, 2015.

[15] Khan K., Moses S.C., Mohd Nayeem A. and Kumar A., Effect of Rotor Speed of Vertical Axis Rotary Harrow on Mean Weight Diameter of Soil Aggregates and Fuel Consumption. *Trends in Biosciences*, Vol.8, No.11, ISSN 0974-8, pp. 2845-2849, 2015.

[16] Harrigan T.M., Rotz C.A. and Harrigan T., Draft relationships for tillage and seeding equipment. *Applied engineering in agriculture*, Vol. 11, No.6, pp.773-783, 1995.

[17] Depliant soil division IT-EN: http://new.frandent.it/soil/?id=465.

[18] AGMA 2101 – D04 – *Fundamental Rating Factors and Calculation Methods for Involute Spur and Helical Gear Teeth.*

[19] Budynas R.G. and Nisbett J.K. *Shigley's Progetto e costruzioni di macchine*. 2ed McGraw-Hill, Milano 2009.

[20] Jingwei T., Buqing X., Shibin W. and Picasso B., Dynamic analysis of a spur gear under moving load. *International Journal of Mechanics and Control*, Vol.9, No.1, pp.41-46, 2008.

[21] Berti Pichat C., *Istituzioni Scientifiche e Tecniche – Corso Teorico e Pratico di Agricoltura* Libro XXX, Fascicolo 4° Vol. IV, L'Unione tipografico-editore, Torino, 1863.

[22] Ferraresi C. and Raparelli T., *Meccanica Applicata*. 3ed, CLUT, Torino 2007.

[23] ASAE Standards D497.4, *Agricultural machinery management data*. St. Joseph, Mich. Mar 1999.

[24] Grisso R.D., Yasin M. and Kocher M.F., Tillage implement forces operating in silty clay loam. *ASAE Paper* No. 94-1532, 1996.

[25] Nobakht N., Askari M., Nikbakht M. and Ghorbani Z., Development of a dynamometer to measure all forces and moments applied on tillage. *MAPAN*, Vol. 32, No.4, pp 311-319, December 2017.

[26] Somà A., *Fondamenti di meccanica strutturale*. 2ed, Levrotto & Bella, Torino 2016.

ISSN 1590-8844
International Journal of Mechanics and Control, Vol. 20, No. 01, 2019

TEMPLATE FOR PREPARING PAPERS FOR PUBLISHING IN INTERNATIONAL JOURNAL OF MECHANICS AND CONTROL

Author1* Author2**

* affiliation Author1

** affiliation Author2

ABSTRACT

This is a brief guide to prepare papers in a better style for publishing in International Journal of Mechanics and Control (JoMaC). It gives details of the preferred style in a template format to ease paper presentation. The abstract must be able to indicate the principal authors' contribution to the argument containing the chosen method and the obtained results. (max 200 words)

Keywords: keywords list (max 5 words)

1 TITLE OF SECTION (E.G. INTRODUCTION)

This sample article is to show you how to prepare papers in a standard style for publishing in International Journal of Mechanics and Control.
It offers you a template for paper layout, and describes points you should notice before you submit your papers.

2 PREPARATION OF PAPERS

2.1 SUBMISSION OF PAPERS

The papers should be submitted in the form of an electronic document, either in Microsoft Word format (Word'97 version or earlier).
In addition to the electronic version a hardcopy of the complete paper including diagrams with annotations must be supplied. The final format of the papers will be A4 page size with a two column layout. The text will be Times New Roman font size 10.

Contact author: author1[1], author2[2]

[1]Address of author1.
[2]Address of author2 if different from author1's address
E-mail: author1@univ1.com , author2@univ2.com

2.2 DETAILS OF PAPER LAYOUT

2.2.1 Style of Writing

The language is English and with UK/European spelling. The papers should be written in the third person. Related work conducted elsewhere may be criticised but not the individuals conducting the work. The paper should be comprehensible both to specialists in the appropriate field and to those with a general understanding of the subject.
Company names or advertising, direct or indirect, is not permitted and product names will only be included at the discretion of the editor. Abbreviations should be spelt out in full the first time they appear and their abbreviated form included in brackets immediately after. Words used in a special context should appear in inverted single quotation mark the first time they appear. Papers are accepted also on the basis that they may be edited for style and language.

2.2.2 Paper length

Paper length is free, but should normally not exceed 10000 words and twenty illustrations.

2.2.3 Diagrams and figures

Figures and Tables will either be entered in one column or two columns and should be 80 mm or 160 mm wide respectively. A minimum line width of 1 point is required at actual size. Captions and annotations should be in 10 point with the first letter only capitalised *at actual size* (see Figure 1 and Table VII).

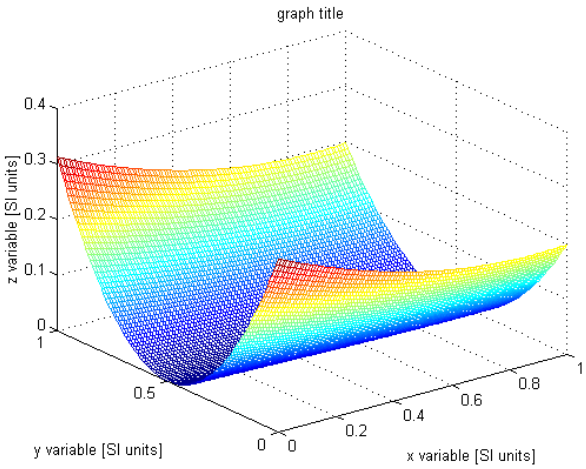

Figure 1 Simple chart.

Table VII - Experimental values

Robot Arm Velocity (rad/s)	Motor Torque (Nm)
0.123	10.123
1.456	20.234
2.789	30.345
3.012	40.456

2.2.4 Photographs and illustrations

Authors could wish to publish in full colour photographs and illustrations. Photographs and illustrations should be included in the electronic document and a copy of their original sent. Illustrations in full colour …

2.2.5 Equations

Each equation should occur on a new line with uniform spacing from adjacent text as indicated in this template. The equations, where they are referred to in the text, should be numbered sequentially and their identifier enclosed in parenthesis, right justified. The symbols, where referred to in the text, should be italicised.

- point 1
  - point 2
    - point 3

1. numbered point 1
   2. numbered point 2
      3. numbered point 3

$$W(d) = G(A_0, \sigma, d) = \frac{1}{T}\int_0^{+\infty} A_0 \cdot e^{-\frac{d^2}{2\sigma^2}} dt \qquad (1)$$

3 COPYRIGHT

Authors will be asked to sign a copyright transfer form prior to JoMaC publishing of their paper. Reproduction of any part of the publication is not allowed elsewhere without permission from JoMaC whose prior publication must be cited. The understanding is that they have been neither previously published nor submitted concurrently to any other publisher.

4 PEER REVIEW

Papers for publication in JoMaC will first undergo review by anonymous, impartial specialists in the appropriate field. Based on the comments of the referees the Editor will decide on acceptance, revision or rejection. The authors will be provided with copies of the reviewers' remarks to aid in revision and improvement where appropriate.

REFERENCES (DESCRIPTION)

The papers in the reference list must be cited in the text. In the text the citation should appear in square brackets [ ], as in, for example, "the red fox has been shown to jump the black cat [3] but not when...". In the Reference list the font should be Times New Roman with 10 point size. Author's first names should be terminated by a 'full stop'. The reference number should be enclosed in brackets.

The book titles should be in *italics*, followed by a 'full stop'. Proceedings or journal titles should be in *italics*. For instance:

REFERENCES (EXAMPLE)

[1] Smith J., Jones A.B. and Brown J., *The title of the book*. 1st edition, Publisher, 2001.

[2] Smith J., Jones A.B. and Brown J., The title of the paper. *Proc. of Conference Name*, where it took place, Vol. 1, paper number, pp. 1-11, 2001.

[3] Smith J., Jones A.B. and Brown J., The title of the paper. *Journal Name*, Vol. 1, No. 1, pp. 1-11, 2001.

[4] Smith J., Jones A.B. and Brown J., *Patent title*, U.S. Patent number, 2001.

International Journal of Mechanics and Control – JoMaC
Published by Levrotto&Bella
TRANSFER OF COPYRIGHT AGREEMENT

NOTE: Authors/copyright holders are asked to complete this form signing section A, B or C and mail it to the editor office with the manuscript or as soon afterwards as possible.	*Editorial Secretary address:* Andrea Manuello Bertetto Matteo D. L. Dalla Vedova, Lorenzo Pace *Dept. of Mechanical and Aerospace Engineering* *Politecnico di Torino* *C.so Duca degli Abruzzi, 24 – 10129 Torino – Italy* *e_mail: jomac@polito.it* *fax n.: +39.011.564.6999*

The article title:

By:_____

To be Published in ***International Journal of Mechanics and Control JoMaC***
Official legal Turin court registration Number 5320 (5 May 2000) - reg. Tribunale di Torino N. 5390 del 5 maggio 2000

A Copyright to the above article is hereby transferred to the JoMaC, effective upon acceptance for publication. However the following rights are reserved by the author(s)/copyright holder(s):
1. All proprietary rights other than copyright, such as patent rights;
2. The right to use, free or charge, all or part of this article in future works of their own, such as books and lectures;
3. The right to reproduce the article for their own purposes provided the copies are not offered for sale.

To be signed below by all authors or, if signed by only one author on behalf of all co-authors, the statement A2 below must be signed.

A1. All authors:

SIGNATURE_____DATE_____ SIGNATURE_____DATE_____

PRINTED NAME_____ PRINTED NAME_____

SIGNATURE_____DATE_____ SIGNATURE_____DATE_____

PRINTED NAME_____ PRINTED NAME_____

A2. One author on behalf of all co-authors:
"I represent and warrant that I am authorised to execute this transfer of copyright on behalf of all the authors of the article referred to above"

PRINTED NAME_____

SIGNATURE_____ TITLE_____ DATE_____

B. The above article was written as part of duties as an employee or otherwise as a work made for hire. As an authorised representative of the employer or other proprietor. I hereby transfer copyright to the above article to *International Journal of Mechanics and Control* effective upon publication. However, the following rights are reserved:
1. All proprietary rights other than copyright, such as patent rights;
2. The right to use, free or charge, all or part of this article in future works of their own, such as books and lectures;
3. The right to reproduce the article for their own purposes provided the copies are not offered for sale.

PRINTED NAME_____

SIGNATURE_____ TITLE_____ DATE_____

C. I certify that the above article has been written in the course of employment by the United States Government so that no copyright exists, or by the United Kingdom Government (Crown Copyright), thus there is no transfer of copyright.

PRINTED NAME_____

SIGNATURE_____ TITLE_____ DATE_____

CONTENTS – Special Issue for RAAD 2018

1 **Preface for the Special Issue of the International Journal of Mechanics and Control (JoMaC) dedicated to 27th International Conference on Robotics in Alpe-Adria-Danube Region (RAAD 2018)**
N. Aspragathos, V. Moulianitis and P. Koustoumpardis

3 **Optimal Placement of a Kinematic Robotic Task for the Minimization of Required Joint Velocities**
C. Valsamos, A. Wolniakowski, K.Miatliuk and V.C. Moulianitis

15 **Motion Path Control of Redundant Robot Arms with Jacobian Singularities**
E. Krastev

23 **Optimization and Analysis of the Modified PLVL-Variable Stiffness Actuator**
M. Dežman and A. Gams

35 **Visual Horizon Line Detection for UAV Navigation**
S. Timotheatos, S. Piperakis and P.Trahanias

53 **Integrating Robotics in Education and Vice Versa; Shifting from Blackboard to Keyboard**
T. Pachidis, E. Vrochidou, C.I. Papadopoulou, V.G. Kaburlasos, S. Kostova, M. Bonković and V. Papić

71 **Micro-Manipulation Methods and Assembly of Hexagonal Microparts on a Programmable Platform With Electrostatic Forces**
G. Kritikou and N. Aspargathos

CONTENTS – Regular Issue

81 **Preliminary Analysis of Interaction among Gears, Tines and Soil in a Rotary Harrow**
T. Raparelli, G. Eula, A. Ivanov, G. Pepe and D. Ricauda Aimonino

93 **An Optimal Fuzzy Controller Based on the Inverse Dynamic Approach Using Real Ant Colony Optimization for Nonlinear Robot Manipulators**
M.J. Mahmoodabadi and D. Roshandel

105 **Suppression of Torsional Vibrations in Drilling Systems by Using the Optimization-Based Adaptive Back-Stepping Controller**
S. Tashakori and M. Fakhar

111 **Analysis of Series Elasticity in Locomotion of a Planar Bipedal Robot**
S. Manara, G.M. Gasparri, M. Garabini, D.Caporale, M. Gabiccini and A. Bicchi

121 **A Service Hexapod Robot as Hospital Guide**
E.C. Orozco-Magdaleno, D. Cafolla, E. Castillo-Castañeda and G. Carbone

127 **Uncertainty Based Optimal Planning of Residential Building Stocks Retrofits**
R. Ricciu, L.A. Besalduch, E. Minisci and A. Manuello Bertetto

Next issue titles will be from the selected and awarded papers of:

IFIT 2018

2nd IFToMM ITALY Conference

Cassino, Italy
November 29-30, 2018