POLITECNICO DI TORINO
Repository ISTITUZIONALE

Stability analysis of different types of steel scaffolds

Original
Stability analysis of different types of steel scaffolds / Cimellaro, GIAN PAOLO; Domaneschi, Marco. - In: ENGINEERING STRUCTURES. - ISSN 0141-0296. - ELETTRONICO. - 152:(2017), pp. 535-548. [10.1016/j.engstruct.2017.07.091]

Availability:
This version is available at: 11583/2690093 since: 2019-10-16T15:09:03Z

Publisher:
Elsevier

Published
DOI:10.1016/j.engstruct.2017.07.091

Terms of use:

This article is made available under terms and conditions as specified in the corresponding bibliographic description in the repository

Publisher copyright
Elsevier postprint/Author's Accepted Manuscript

© 2017. This manuscript version is made available under the CC-BY-NC-ND 4.0 license http://creativecommons.org/licenses/by-nc-nd/4.0/.The final authenticated version is available online at: http://dx.doi.org/10.1016/j.engstruct.2017.07.091

(Article begins on next page)

12 October 2024

STABILITY ANALYSIS OF DIFFERENT TYPES OF STEEL SCAFFOLDS

Cimellaro, Gian Paolo[1], Domaneschi, Marco[2]

ABSTRACT

Scaffolds are temporary structures commonly used in construction to support various types of loads. Recently their collapse is becoming more common as shown by the number of accidents and injuries reported. The paper analyzes the main flaws and imperfections that could lead to the collapse of the scaffoldings. The study has been focused at the numerical level on three different types of steel scaffoldings: (i) joint tubes, (ii) multidirectional and (iii) prefabricated systems, which are commonly used in Italy. Several finite element simulations under different loading conditions on three types of steel scaffoldings have been performed, taking into account the imperfections during the assembly at the construction site, the base boundary conditions and the effects of lateral restraint arrangement. Finally, the study proposes an empirical formula to identify the critical load of different types of steel scaffoldings based on the number of story levels and the type of boundary conditions.

KEYWORDS: collapse, construction, structural analysis, steel scaffolds, scaffold support system

1. INTRODUCTION

Steel scaffolds are extensively used to support permanent and temporary works during different stages of construction all over the world. The collapse of scaffoldings usually leads to work delays and it is also

[1] *Visiting Professor, Department of Civil and Environmental Engineering, University of California Berkeley, Davis Hall, Berkeley, CA 94720-1710, USA, E-mail: gianpaolo.cimellaro@polito.it*

[2] *Assistant Professor, Politecnico di Torino, Corso Duca degli Abruzzi 24, 10129 Turin.*

been responsible for numerous worker injuries (Figure 1). In 2001, a study carried out by the Department of Hygiene and Safety Service at Work (SPISAL) of Treviso in Italy highlighted some common characteristics of the recorded accidents [1]. As shown in Figure 1 most of the accidents happen in the construction sector, followed by injuries caused during the installation, maintenance and use of earth-moving machinery.

The consequences of overloading scaffoldings are evident in the recent accidents. In particular, in a coal power plant in Barangay Malaya (Pililia town, 2013), at an art workshop in Xianrendong (village, Changping district) in northern Beijing (2012), in a building site in Putney, in south-west London (2012), in the Guangxi Medical University Library accident (2007), in which seven construction workers were killed [2]. Usually the structural failure of the scaffoldings occurs due to the inadequate design, the poor installation, and the unknown overloads on site [3][4][5]. Therefore, a precise estimation of the load carrying capacity of scaffoldings on site, to guarantee the proper safety level of construction workers, is mandatory.

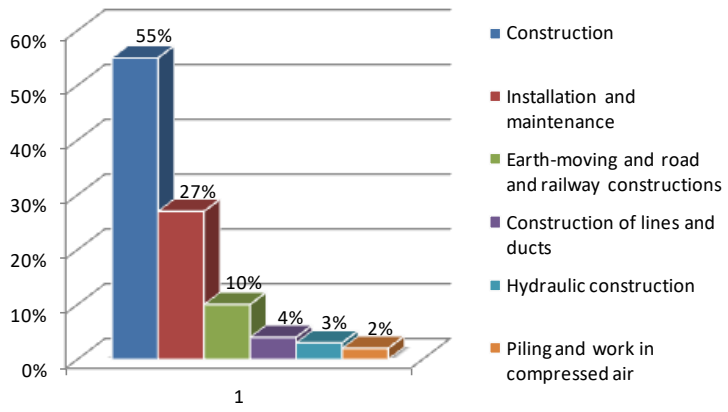

Figure 1 Distribution of injuries based on the construction sector (Adapted from [1])

1.1 Literature review

The analysis of prefabricated steel frame scaffolding uniformly loaded has been considered in the work by Chan et al. [6], considering different types of connections (e.g. pin, semirigid and rigid joints)

using the concept of effective stiffness, even if the load eccentricity is not taken into account. Later Peng et al. [4][7] analyzed the combination of modular steel scaffolds and wooden shores, used for temporary support during the construction of high-clearance concrete buildings. Additional experimental tests of steel frame scaffolding systems have been carried by Weesner et al. [8] and the output data has been used to calibrate the three-story scaffolding numerical model developed with a commercial software. The model assumes rigid joints between stories and pin joints at the top and the bottom of the model. The numerical results of the elastic buckling analysis were higher than the values of the experimental tests with difference between 6% and 17%. Similar studies were carried out by Yu et al. [5][9] and Chung et al. [10], but for a analyzing the behavior of multi-storey prefabricated scaffolding. The novelty of the study is that the finite element analysis has been performed taking into account different types of connections between floors. Furthermore, Peng et al. [11] tested the door-shaped steel scaffoldings. For simulating the lateral unrestrained condition of the top part during the tests, the scaffolding was placed upside down. The bottom part of the upside down scaffolding is the top part of the original scaffolding and it rests on steel plates that ensure an unrestrained movable condition. A barycentric load and three eccentric loads were considered in the tests, while some cross-braces were also removed to analyze how varies the value of the critical load. Recently Zhang et al. [12] has investigated in probabilistic terms the strength of scaffoldings. In particular, they focused on the effects of uncertainties in the geometrical and mechanical parameters as well as the ultimate strength of the multi-storey steel scaffolding. Three-dimensional second-order inelastic FE models were used to compute the ultimate limit strength and compared with the experimental results. A similar study was performed by Liu et al. [13] where they analyzed the strength and failure modes of steel tubes and coupler scaffolds (STCS's). Twelve full-scale static tests were conducted on twelve specimens that were pinned at the base and have a roller on the top. Experimental results have shown that the typical collapse mode for scaffolding is the lateral buckling. FEM models as well as a

simplified model were developed for the analysis and the design of STCS to recommend design guidelines for practice.

Chandrangsu and Rasmussen [14] analyzed the measurements of geometric imperfections of support scaffoldings collected from four different construction sites around the Sidney area. The analyzed measurements were the *out-of-straightness of the standards* (uprights), *out-of-plumb of the frame* and *loading eccentricity* between the timber bearer and the U-head screw jack. The results of the experimental tests on cuplok joints were presented discussing the semi-rigid joint behavior observed during the tests in probabilistic terms. In another work, Chandrangsu and Rasmussen [15] proposed different methods for modeling spigot joints, semi-rigid upright to the beam connections and base plate eccentricities. Zhang et al. [16] analyzed typical steel scaffold shoring structures utilizing recent survey data on geometric and mechanical properties of steel scaffold members, and a second order inelastic structural analysis model. The concluded in their analyses that the variability in system strength mainly arises from the uncertainties associated with load eccentricity, material and geometric properties of the standards. Prabhakaran et al. [17] have developed an algorithm to model the scaffold behavior which describes the full moment-rotation curve including looseness as well as the nonlinear loading and unloading behaviour. The results have shown that for the sway frames, the looseness reduces the capacity significantly, but for the braced frames, the looseness has less effect.

Recently, Błazik-Borowa and Szer [18] attempt at determining the reasons of the hazardous incidents of workers on scaffolds. Reasons of common failures are traced, with the activities that contribute to decrease unsafe situations as well. Subsequently, Błazik-Borowa and Gontarz [19] investigate numerically the influence of geometric imperfections on the static stability of façade scaffolding. Increase of internal forces due to imperfections is recognized, with the highest increase occurrence when imperfections occur in the lowest elements. Table 1 summarizes the relevant aspects of the literature review.

Table 1 Summary of the literature review

	Year	Topics	Type of scaffolding	Experimental tests	Numerical investigation
Peng et al. [4][7]	1996	Modelling, failure, guidelines	Door type – steel, bamboo Multi-storey-multi-bay	-	Structural analytical models – nonlinear analysis
Yu et al [5]	2004	Stability	Door type – steel Multi-storey	Loading tests on scaffolds	FEM – nonlinear analysis
Chan et al. [6]	1995	Stability	Door type – steel Multi-storey	-	FEM - elastic buckling analysis
Weesner et al. [8]	2001	Stability	Door type – steel Multi-storey	Loading tests on scaffolds	FEM – elastic buckling and nonlinear analyses
Yu et al. [9]	2005	Stability	Bamboo Multi-storey-multi-bay	Loading tests on scaffolds	FEM – nonlinear analysis
Chung et al. [10]	2002	Material characterization	Bamboo	Mechanical tests on specimens – bending tests	-
Peng et al. [11]	2009	Eccentric loads	Door type – steel Multi-storey	Loading tests on scaffolds	FEM - nonlinear analysis
Zhang et al. [12]	2010	Probabilistic study of strength	Steel Multi-storey-multi-bay	Loading tests on scaffolds	FEM – nonlinear analysis
Liu et al. [13]	2010	Stability without X-bracing	Steel Multi-storey-multi-bay	Loading tests on scaffolds	FEM – elastic buckling and nonlinear analyses
Chandrangsu and Rasmussen [14]	2011	Geometric imperfections and Cuplok joint system	Steel	Loading tests on joints	-
Chandrangsu and Rasmussen [15]	2011	Support system	Steel	Loading tests on supports	FEM – nonlinear analysis
Zhang et al. [16]	2012	Reliability assessment	Steel Multi-storey	-	FEM – nonlinear analysis
Prabhakaran et al. [17]	2011	Connections containing looseness	Steel Multi-storey-multi-bay	-	FEM – nonlinear analysis Reduced analytical model
Blazik-Borowa and Szer [18]	2015	Information on the accidents Errors and failures in practice	General configurations	-	-
Blazik-Borowa and Gontarz [19]	2016	Geometric imperfections	Steel Multi-storey-multi-bay	-	FEM – nonlinear analysis

The purpose of this research is to analyze the behavior of steel scaffolding focusing on safety concerns that may arise on site. Three different types of steel scaffoldings which are usually used in practice in Italy have been considered. The major flaws or imperfections sequences that lead more easily to the collapse of the scaffolding have been analyzed. Different types of improper installations have been also modeled removing the cross-bracings in sequence during the analyses. Finally, the paper proposes an empirical

formula to determine the critical load of a scaffold using parameters such as the scaffolding typology, the number of floors and the different boundary conditions.

Both 1-bay 1-story and multi-story models have been analyzed for the three types of scaffoldings (joint tubes, multidirectional and prefabricated scaffolds).

2. STEEL SCAFFOLDING - TYPOLOGIES OF CONSTRUCTION

Scaffoldings are provisional multistory reticular structures and until the early twentieth century, were mainly made of wood (e.g. the most famous wood scaffolding was the one made by Michelangelo for the construction of the dome of St. Peter's Basilica in the Vatican), while the modern ones are almost all made of steel and sometimes aluminum. In Asian countries are also used bamboo structures [10]. This section describes the most commonly used types of steel scaffoldings in Italy which can be grouped in three types:

- *Joint tubes system*: also known as pipes *Innocenti* scaffolding (after the inventor Ferdinando Innocenti), which are very versatile and suitable for any type of use, but they need more work to be assembled.
- *Multidirectional system*: they are enough flexible and generally suitable for the realization of three-dimensional structures.
- *Prefabricated system*: They are not flexible and mainly designed for use on façades of linear buildings.

It is worth noticing that the naming of the three types is not universally accepted, but varies from country to country. For example *Joint tubes scaffolds* are also called *tube and fitting* in Europe or *tube and coupler* in US. *Multidirectional* are called *prefabricated* in [25], while *prefabricated* are often called *modular scaffolds*. Furthermore, sometimes, *proprietary scaffolds* are also referred as *modular scaffolds*, while *Cuplok* and *ring wedge systems* are examples of *proprietary scaffolds* as quoted in European

standards. The scaffoldings used in the analysis are modeled using an Italian producer handbook [22] and the original terminology used in Italy is adopted. However, all dimensions of the models in the paper satisfy the design recommendations of the international standards US OSHA and EN 12811/EN 12812 [23][24][25].

2.1 Steel scaffoldings with joint tubes

This typology allows working at considerable heights, thanks to the creation of stacked decks, through the connection of steel pipes vertically and horizontally, obtained with preprinted special joints.

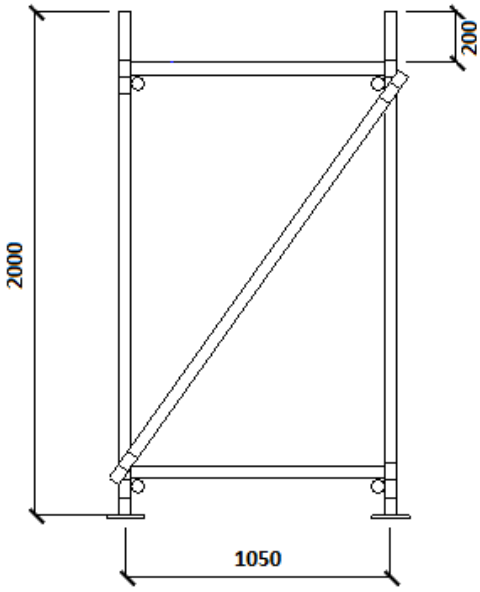

(a) (b)

Figure 2 (a) Joint tube scaffold (b) geometry of a single element (mm)

The joint tubes scaffoldings are still widely used because they are extremely flexible and allow covering complex façades (e.g. articulated, curved or with drastic changes) thanks to the different types of modules which can be assembled with the tubes (Figure 2). Joint tubes are also used for the maintenance

and restoration of large historical and monumental buildings. They have spread recently in the construction of canopies, shelters, barriers and structures for advertising, trade shows, sporting events, etc. The main structural problem with this type of scaffold comes from the proper installation of the single structural elements, therefore it is extremely important to pay attention to the tube junctions, so that the verticality and / or the inclination envisaged will be maintained to the anchorages and to the supports on the ground. For these reasons it would be advisable (though is not always the case) delegate the installation of this equipment to qualified, capable and knowledgeable personnel, properly trained and informed of the risks and dangers that this activity causes.

2.2 Multidirectional scaffold

Multidirectional scaffoldings are still not frequently used. They can be used to accomplish the most complex and convoluted work; in classical structures, in construction and in building maintenance (see Figure 3a).

(a)

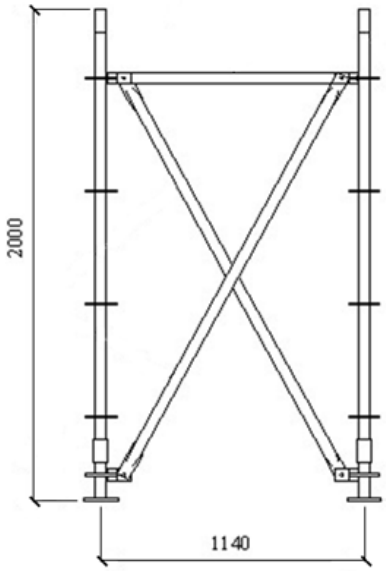

(b)

Figure 3 (a) Multidirectional scaffolds (b) geometry of a single element (mm)

They have the advantage to combine the productivity of the typical prefabricated scaffoldings with the flexibility of the joint tubes scaffoldings, because they are modular, very easy to assemble so they allow a very high productivity and adaptability. The elements that constitute multidirectional scaffoldings are a series of rods with fixed perforated crowns, which allow assembling in multiple directions.

2.3 Prefabricated scaffold

Among the three selected typologies, steel and prefabricated scaffoldings (Figure 4) are the most common and used type in construction industry, and for this reason, they are also those in which the manufacturers pay more attention.

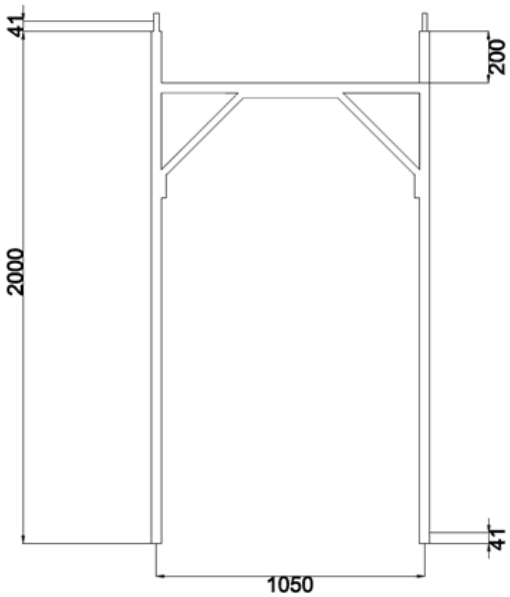

(a) (b)

Figure 4 Prefabricated scaffold (b) geometry of a single element (mm)

Manufactures are always looking for technical improvements to reduce costs, increase performances and reliability, reducing the time of installation and disassembly. In fact, scaffolding systems realized with prefabricated frames are made by assembling few pieces (real frame, current, railings, decking planks, toe boards, diagonal stiffening, sideburns, valances etc.) designed and manufactured to facilitate and make repetitive operations of assembly, so as to enable the installation of the structure in a short time, even with not qualified personnel. Each company produces at least couple of prefabricated scaffoldings models which differ on the geometric dimensions, e.g. for pedestrian access at ground level. In this study, a standard configuration for elevated levels has been adopted with a fixed height of 200 cm.

3. COLLAPSE LOAD

The scaffolding is modeled in SAP2000 [20] defining the steel material properties, the sections of the elements and the different boundary conditions. Besides linear buckling analyses, nonlinear analyses have been also performed with a fiber element model with spread plasticity, including the interaction between axial and moment load with nonlinear local redistribution [21]. Both procedures are repeated for the three scaffolding considered in the paper. Finally, collapse load is defined as the lowest between the buckling load and the plastic load.

4. FEM MODELS OF THE SCAFFOLDINGS

The analysis of the different scaffolding systems has been performed using the commercial finite element software SAP2000 [20]. Both *linear Buckling analysis* and *nonlinear pushover analysis* have been performed for the three types of scaffoldings considered in the paper to predict their ultimate capacity. Different geometries, material properties, load combinations and boundary conditions have been considered in the analysis.

During the *linear Buckling analysis* in SAP2000 internal perturbations are applied in the original structural configuration. In detail, a set of loads are applied for which deflections could induce instability under P-Delta effects [20]. When the scaffolding becomes unstable, the corresponding buckling load is identified. Thus, the linear buckling analysis in SAP2000 produces a set of buckling factors and corresponding mode shapes. In other words, when the loads are multiplied by the corresponding buckling factors, the resultant load represents the one inducing buckling. Buckling must be explicitly evaluated for each set of loads considered because, unlike natural frequencies, buckling modes are dependent upon a given load pattern (e.g. the vertical load applied at the top of the scaffolding in this case).

The *Pushover* is a static-nonlinear analysis method where a structure is subjected to a monotonic load pattern, which continuously increases through elastic and inelastic behavior until the collapse load is reached. Thus, the *nonlinear pushover analysis* on scaffoldings is performed by applying a vertical unit force which is increased monotonically, until the scaffolding collapses. During the pushover analysis, all the ideal hinges have been modeled as plastic hinges with coupled bi-axial bending behavior which is modeled using the P-M2-M3 yielding surface [20]. The maximum plastic load, which brings the system to collapse due to the nonlinear material behavior, is given in term of multiplier of the initial applied load.

Once the two analyses were accomplished, the lowest load value between the plastic and the buckling load represents the critical load that leads the structure to collapse. The models include the self-weight from the beginning of the considered analyses.

4.1 One story level model

4.1.1 Geometry and FE characteristics

The configuration of the reference module is shown in Figure 5. The length of the model is 1.8 m while the width and high are fixed as shown in Figures 2-4. The deck has been modeled with four-nodes shell elements (128 shell elements in total). The thin-plate Kirchhoff formulation is used neglecting the

shear deformations [20]. The tubes of the scaffolding systems have been modelled by two-nodes beam elements (biaxial bending, torsion, axial deformation and biaxial shear are accounted by the Bathe and Wilson formulation [20]). All elements used in the models are made up of steel S235JR, while the mechanical properties of the steel are given in Table 2. The cross sections of the tubes are characterized by the external diameter of *48.3 mm* with thickness *2.9 mm* for prefabricated scaffold and *3.2 mm* for the remaining types.

Global performances of the scaffoldings are usually affected by the internal constraints and the external boundary conditions; therefore, it is very important modeling these parts accurately.

Table 2 Material properties of steel scaffold system

Material Properties of Steel S235JR		
Elastic Modulus E	200000	N/mm^2
Poisson's coefficient v	0.3	
Yield stress f_y	235.00	N/mm^2
Tensile strength f_u	360.00	N/mm^2
Weight per unit volume	76972.86	N/m^3

4.1.2 Base boundary conditions and lateral support

Scaffoldings and temporary structures normally rest on wooden planks or on concrete plates (Figure 5a).

The base boundary condition can be modeled using a rotational spring; however, parameters should be calibrated through experimental tests in laboratory taking in account also the uncertainties which is of course beyond the scope of the paper. In particular, in this paper only the two upper and lower case have been considered which corresponds to fixed or hinge base.

The lateral supports are used to fix the scaffolding to a lateral wall. It is based on a steel tube of the length of 20 cm, which is hinged at both the scaffold and lateral wall side (Figure 5b-c). In the configuration analyzed, the lateral supports are located at the two external vertices of the top story level and, for multi-storey scaffolds, at intervals of three storeys. It falls within the aims of this parametric study for evaluating the effect of eccentric loads on buckling for different types of scaffoldings, as in Chan et al [6]. The result consists in the identification of the contribution of the number of stories on the critical load, without modifying the standard lateral supports scheme.

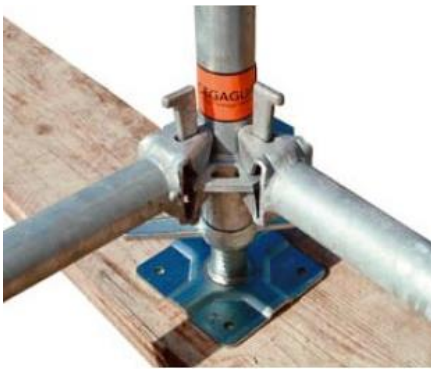

(a)

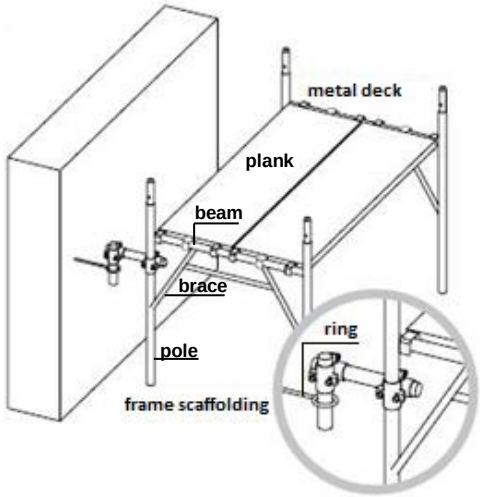

(b)

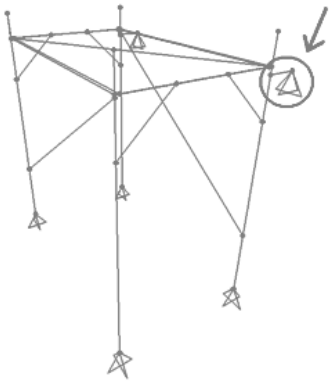

(c)

(d)

(e)

(f)

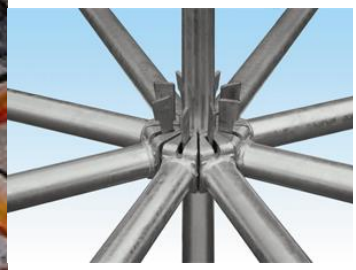

(g)

Figure 5 (a) Structural detail of the hinge beam at the base for multidirectional scaffold, (b) Structural detail of the lateral support, (c) SAP model. Connections: prefabricate scaffold (d), beam-plank (e), joint tubes (f), multidirectional (g)

4.1.3 Internal boundary conditions

The definition of the internal boundary conditions is critical, because it characterizes the performances of the scaffold. The connections between *pole and beam*, between *pole and brace* and finally between *beam and plank* have been modeled differently depending on the type of scaffolding considered (see Figure 5b). Due to the lack of information in the existing literature related to the modeling aspects of the scaffolds internal boundary conditions, an Italian scaffolds producer [22] has been also consulted for assessing the effectiveness of the models assumptions. In the *prefabricate scaffold system* all connections have been modeled as fixed supports (Figure 5d), but the connection between beam and plank has been made with a cylindrical hinge (Figure 5e).

In the *joint tubes steel scaffold*, all connections have been modeled as hinges (Figure 5f).

In the *multidirectional scaffold*, the connections between *two consecutive poles* and *between pole and beam* have been modeled as a fixed joint (figure 5g), while the connection *between pole and brace* has been made with a hinge and the connection *between beam and plank* has been modeled with a cylindrical hinge (Figure 5e). During the pushover analysis, all the ideal hinges have been modeled as plastic hinges with the fiber model P-M2-M3. It reproduces the axial behavior of a number of representative axial fibers distributed across the cross section of the frame element. The axial stresses are integrated over the section to compute the values of axial force P and bending moments M2 and M3. Likewise, the axial displacement U1 and the rotations R2 and R3 are used to compute axial strains in each fiber [20].

4.1.4 Load distribution

The loads considered in the pushover analysis are applied in differ positions in the structure to study the effect of eccentricity on the critical load. Nine different loading positions have been considered according to Figure 6 where the centered position corresponds to the position number 1. Resulting positions 1-9 correspond to eccentricities e1-e9).

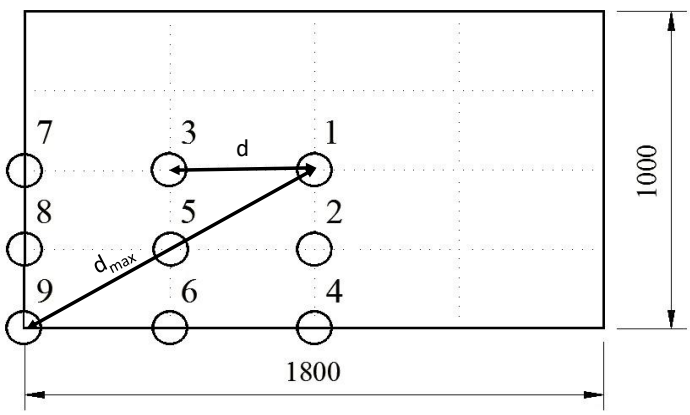

Figure 6 Plan view of the different axial load distributions considered in the analysis

4.2 FEM structural models analyzed

Both 1-bay 1-story and multi-story models have been analyzed as shown in Figure 7 for all three types of scaffold systems (joint tubes, multidirectional and prefabricated scaffolds). The analyses performed can be organized in three groups as follow:

- Comparison between the plastic loads and the buckling loads of the three types of scaffoldings with different *boundary conditions at the base (fixed and hinge)* for 1-story 1-bay model with different *load eccentricities*;
- Comparison between the buckling loads of the three types of scaffoldings considering different *boundary conditions at the base (fixed and hinge)* and at the *lateral supports* for 1-story 1-bay scaffold model with different *load eccentricities and imperfections*;

- Comparison between the buckling loads of the three types of scaffold systems considering different *boundary conditions at the base (fixed and hinge)* and at the *lateral supports* for multi-story 1-bay model with different *load eccentricities* at different story levels.

For all the different scaffoldings, the configurations shown in Figure 7 have been tested which are: (i) the one story level model (Figure 7a); (ii) the single bay multi-story level (up to 15 stories) model (Figure 7b-c); (iii) three bays three-story model (Figure 7d).

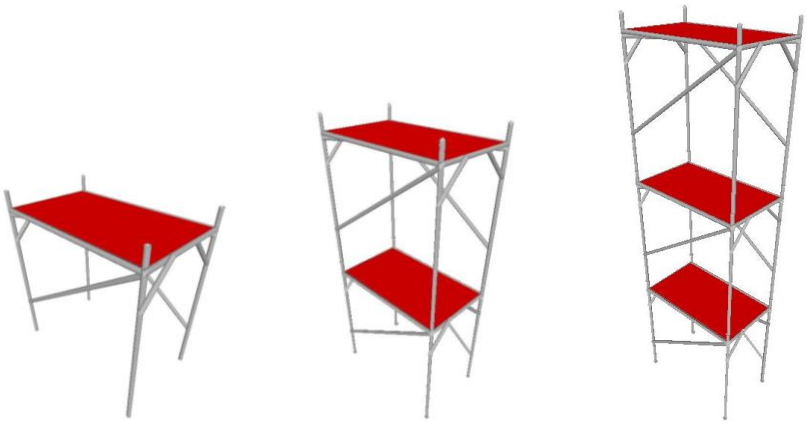

(a) (b) (c)

Figure 7 SAP model of (a) 1-story, (b) 2 story, (c) 3 story single bay prefabricated scaffold frame

4.3 Manufacturing imperfections

In all the configurations, it is assumed that the scaffolding is properly installed without imperfections in the connections. However, the lack of experience of certain construction workers and/or the limited time available can include some imperfections in the structural configuration. For example, one or more diagonal bracing member can be missing or improperly placed during the setup.

Imperfections can also be of different nature. For example, some structural members that leave the factory manufacturer after the industrial process might have several imperfections and different characteristics from those indicated in the catalogs, that could affect the structural performances.

Examples of imperfections could be the imprinted curvatures, states of internal residual stresses, local reduction of the thickness of the tubes, the variations of sections, the presence of cracks or fissures and elements with a state of residual tension, etc. Complex FEM models are required for this type of imperfections, so as a first attempt, the imperfections in the different models have been modeled by removing the bracing elements. In total seven different configurations have been considered as shown in Figure 8.

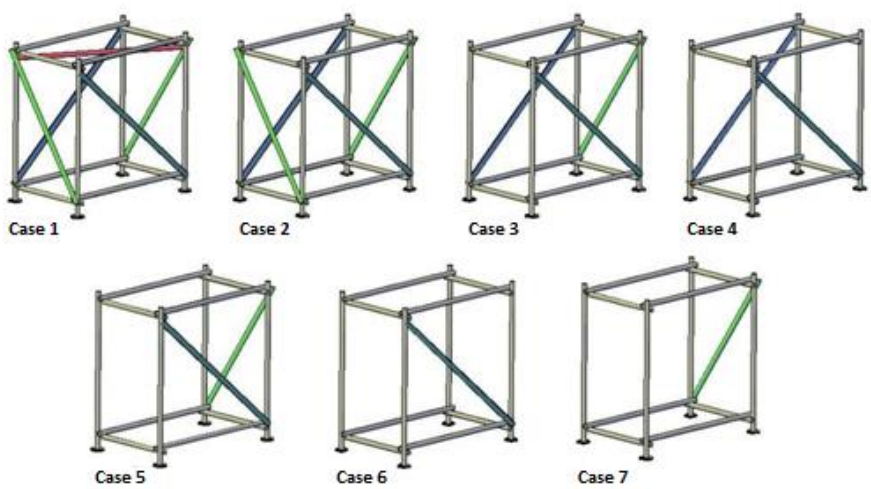

Figure 8 Scenario events considered in the analysis (case 1 corresponds to proper installation)

5. ANALYSIS RESULTS

5.1 One story - one bay model and load eccentricity effects

The evaluation of the buckling load and the vertical pushover analysis has been performed for the three scaffoldings using different positions of the vertical loads. The comparison between the *buckling* and the *plastic* load vs. the normalized distance from the center of mass for o*ne story - one bay model* with (a) *fixed* and (b) *hinge base* for the case of the prefabricated scaffolding is shown in Figure 9. The analysis

shows that for the hinge base configuration, the *plastic load* is higher than the *buckling load* (Figure 9b). In particular, the buckling load remains stable around *100 kN* for any normalized distance from the hinge base configuration, so it can be assumed as the critical load and it is not affect by the eccentricity of the load. In the fixed base case, the values of the buckling load are comparable with the plastic load when the eccentricity of the loads increases (Figure 9a). Furthermore the plastic load is not affected by the boundary condition, because it is mainly driven by the nonlinear material constitutive law. Instead the buckling load in SAP2000 assumes that the material is linear, so the influence of the boundary conditions is higher.

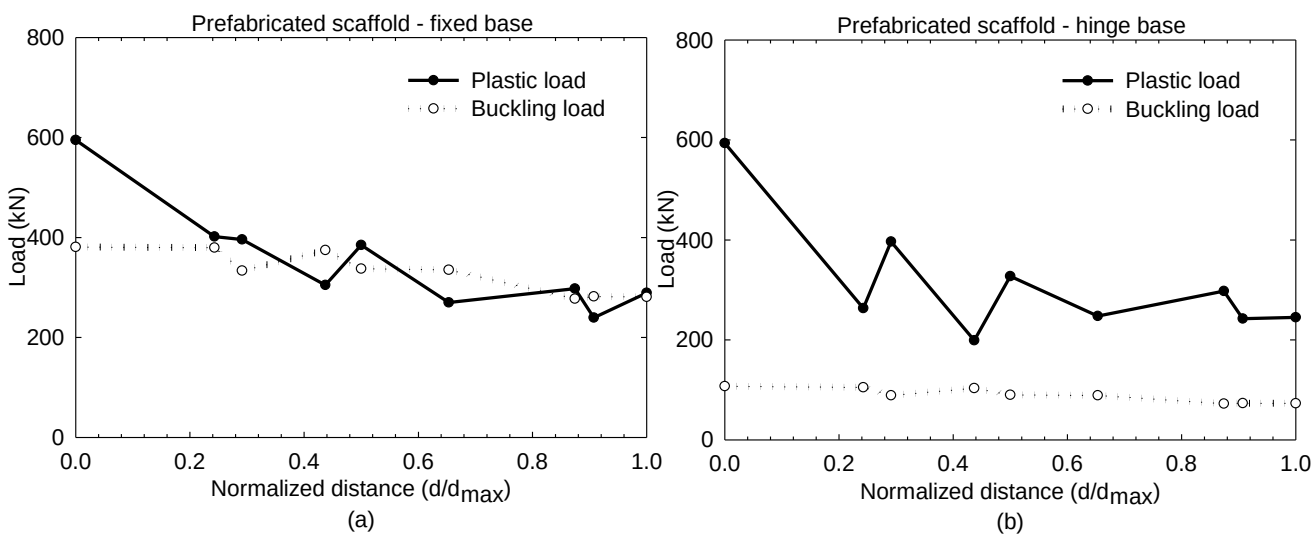

Figure 9 Prefabricated scaffolding: comparison between the buckling and the plastic load vs. the normalized distance (different load eccentricities): 1-story 1-bay model with (a) fixed and (b) hinge base.

It is worth noticing that the observed behavior in Figure 9 is different from the existing literature results where the linear buckling loads are usually higher than those computed by nonlinear analyses. The reason of such a different behavior is justified by the squat configuration of the tested specimens [13][8].

In Figure 10 the comparison between the boundary conditions for the three analyzed scaffoldings is shown by using two different software: SAP2000 and ANSYS. In all cases, the analysis shows that the collapse load for the *fixed base* configuration is higher than the *hinge base* configuration.

In particular in SAP2000 for the multidirectional scaffolding (Figure 10b) the fixed base configuration holds two times more load than the hinge base configuration, while in the prefabricated scaffolding the ratio increases to four times (Figure 10c). This different behavior is caused by both the internal and external boundary conditions between the two scaffoldings. In fact, the internal joints of the FEM model are assumed fixed in the prefabricated scaffolding, while they are assumed hinged in the multidirectional scaffolding. The results is ANSYS show similar trend to the results in SAP2000, but the modeling assumptions are different. SAP2000 uses a linear buckling analysis described in section 4, while ANSYS uses a non linear fiber element model with spread plasticity and nonlinear geometries. Finally, the SAP2000 models have been used to perform the analyses because of the good agreement of the results with the existing ones available in literature by Chan et al. (2009), as reported in detail in next Section 5.4.

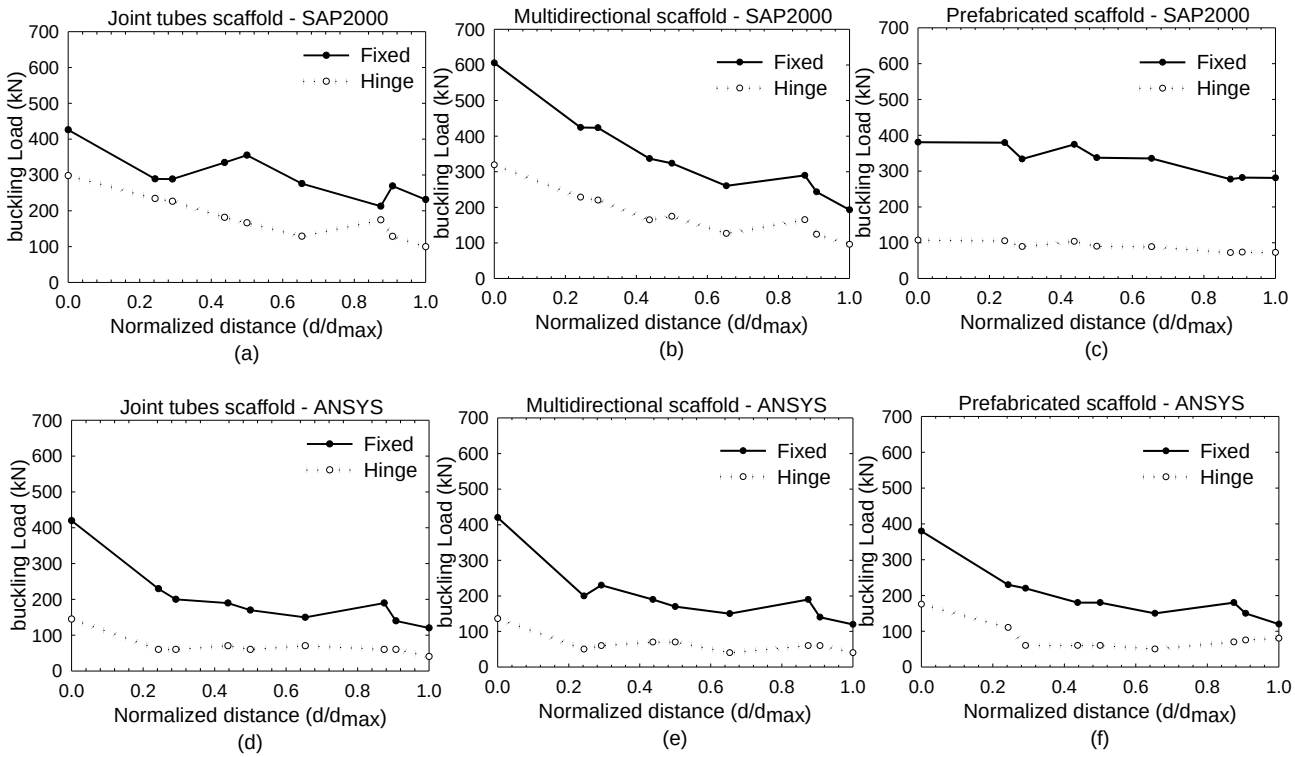

Figure 10 Base boundary conditions for different scaffoldings (1- story, 1-bay) in SAP2000 (a-c) and ANSYS (d-f)

5.2 Different story levels and load eccentricity effects

The comparison of the buckling loads for the three scaffoldings with centralized load assuming different boundary conditions and different story levels is shown in Figure 11.

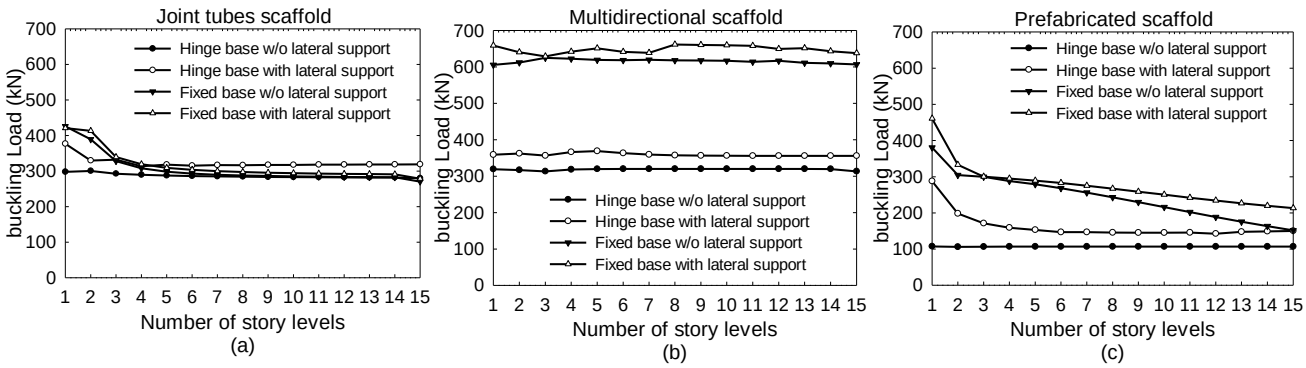

Figure 11 Effect of the boundary conditions vs. the number of stories (centralized load, 1- story, 1-bay)

In particular, Figure 11a shows that the joint tubes scaffolding have nearly the same behavior with different boundary and lateral support conditions, since the values of the buckling loads are not affected and remain constant around 300 *kN*, from the fourth story level for all the cases. The reason of this behavior can be explained by considering the higher flexibility of the global system (Figure 2a-b). Therefore, even if an additional constraint is added at the base or at the top (lateral support), the higher internal deformability of the scaffold is not able to transfer the "stiffening effect" of the boundary to the global behavior of the system which is controlled by the internal hinges and it remains almost constant. The buckling loads of the multidirectional scaffolding show significant differences between the *fixed* and *hinge* base boundary conditions (Figure 11b). Instead, the presence of the lateral support does not improve significantly the performance of the structure. In fact, the lateral support increases the buckling load from 300 to 350 *kN* for the hinge configuration and from 600 to 650 *kN* for the fixed base configuration, while the number of story levels do not affect the buckling load.

In the prefabricated scaffolding (Figure 11c), the *lateral support* does not influence significantly the hinge base configuration. In fact, from the third story level the buckling load remains constant between 100 and 200 *kN*. Instead, in the fixed-base configuration the *lateral support* increases slightly the buckling load when the number of stories increases.

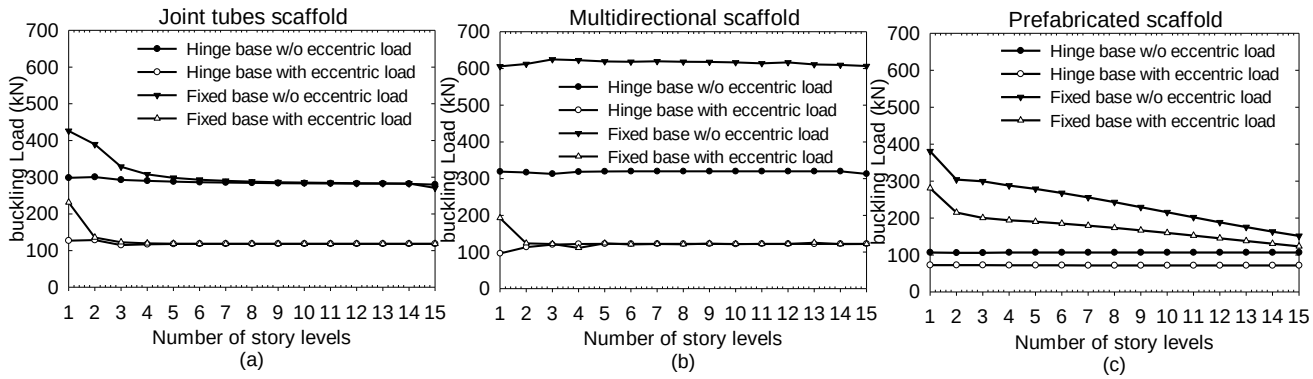

Figure 12 Effect of the boundary conditions at the base and of the eccentric load vs. the number of stories (1-bay)

The influence of the eccentric load for different boundary conditions at different story levels for different scaffoldings is shown in Figure 12. In particular, in all the three cases there is a reduction of the buckling loads when an eccentric load is applied. However, the reduction due to eccentricity tends to disappear when the number of stories in the model increases.

Instead, the buckling load is affected by the scaffolding type and the boundary condition analyzed. In fact, as expected, the fixed-base configuration holds more load than the hinge-base configuration, because the first configuration is not allowing any rotation and it is therefore stiffer with respect to the second one. In details, the joint tubes scaffolding (Figure 12a) shows that the eccentric load reduces the buckling load at every story level, regardless the type of boundary condition (hinge or fixed). In the cases without eccentricity, for the fixed base case, the buckling load is 50% higher than the hinge base for the first floor and then decreases linearly. After the fourth floor, the boundary conditions at the base do not

have any influence and the buckling load remains constant at 300 kN. In the cases with eccentricity, the behavior is the same but the change comes after the second floor and the value remains steady at 100 kN. The multidirectional scaffold (Figure 12b) is more affected by the eccentric load than the joint tubes scaffolding. In fact, the eccentric load decreases the buckling load six times for the fixed base and three times for the hinge base respectively, while the number of story levels do not affect the buckling load. In the prefabricated scaffold (Figure 12c) two different behaviors are observed depending on the type of boundary condition. The buckling load remains constant around 100 kN in the hinge base configuration, while for the fixed base configuration the buckling load decreases respectively from 400 to 150 kN and from 300 to 125 without and with eccentric load respectively. In both cases, the eccentric load decreases approximately the buckling load of 20%. When comparing the multidirectional scaffolding (Figure 12b) and prefabricated scaffolding (Figure 12c) for different boundary conditions at the base, the multidirectional scaffolding with fixed base holds two times more load than the hinge base, while in the prefabricated scaffolding this ratio increases to four times. These differences between the two systems are mainly due to the internal boundary conditions and in particular the type of connection between the tubes. In fact, the joint in the multidirectional scaffolding (Figure 3) has a lower value of plastic moment with respect to the prefabricated scaffolding. For this reasons the internal joints are modeled as hinges in the multidirectional scaffolding, while they are modeled as fixed in the prefabricated scaffolding. Therefore, not only the effect of the external boundary conditions is shown in Figure 12, but also the effect of the internal boundary conditions which change from one scaffolding to the other.

5.3 Different story levels and imperfections effects

The effects of the different types of imperfections shown in Figure 8 are summarized in Figure 13. The joint tubes scaffolding (Figure 13a) shows two different behaviors: in the imperfections corresponding to Case 1 to 4 the buckling load decreases from 300 to 100 kN when the vertical load increases its

eccentricity. For the imperfections corresponding to Case 5 to 7, the buckling load remains constant as you increase the eccentricity of the load. The reason of this behavior is justified by the fact that cases from 1 to 4 are highly statically indeterminate structures, while case 5 to 7 have a low degree of indeterminacy with only 1 or 2 redundants, so they are nearly statically determinate. In these cases the buckling load is low and therefore the eccentric applied load does not play a key role in the collapse.

The multidirectional scaffolding (Figure 13b) behaves similarly to the joint tubes scaffolding, despite the different dimensions and internal boundary conditions. The buckling load decreases for Case 1 to 3 from 300 to 100 *kN*, while for Cases 4 to 7 the buckling load remains stable. For the prefabricated scaffolding (Figure 13c), only four types of imperfections are possible and in all cases the buckling load remains stable between 50 and 110 *kN*. Finally, Figure 14 shows the comparison between the three types of scaffoldings for different eccentric loads and boundary conditions for different story levels (see Figure 6).

In the Configuration hinge base without eccentric load, the behavior between the joint tubes and the multidirectional scaffolding is similar, while the prefabricated scaffolding presents lower values of the buckling load. The presence of an eccentric load decreases this difference making a very similar behavior between all types of scaffoldings.

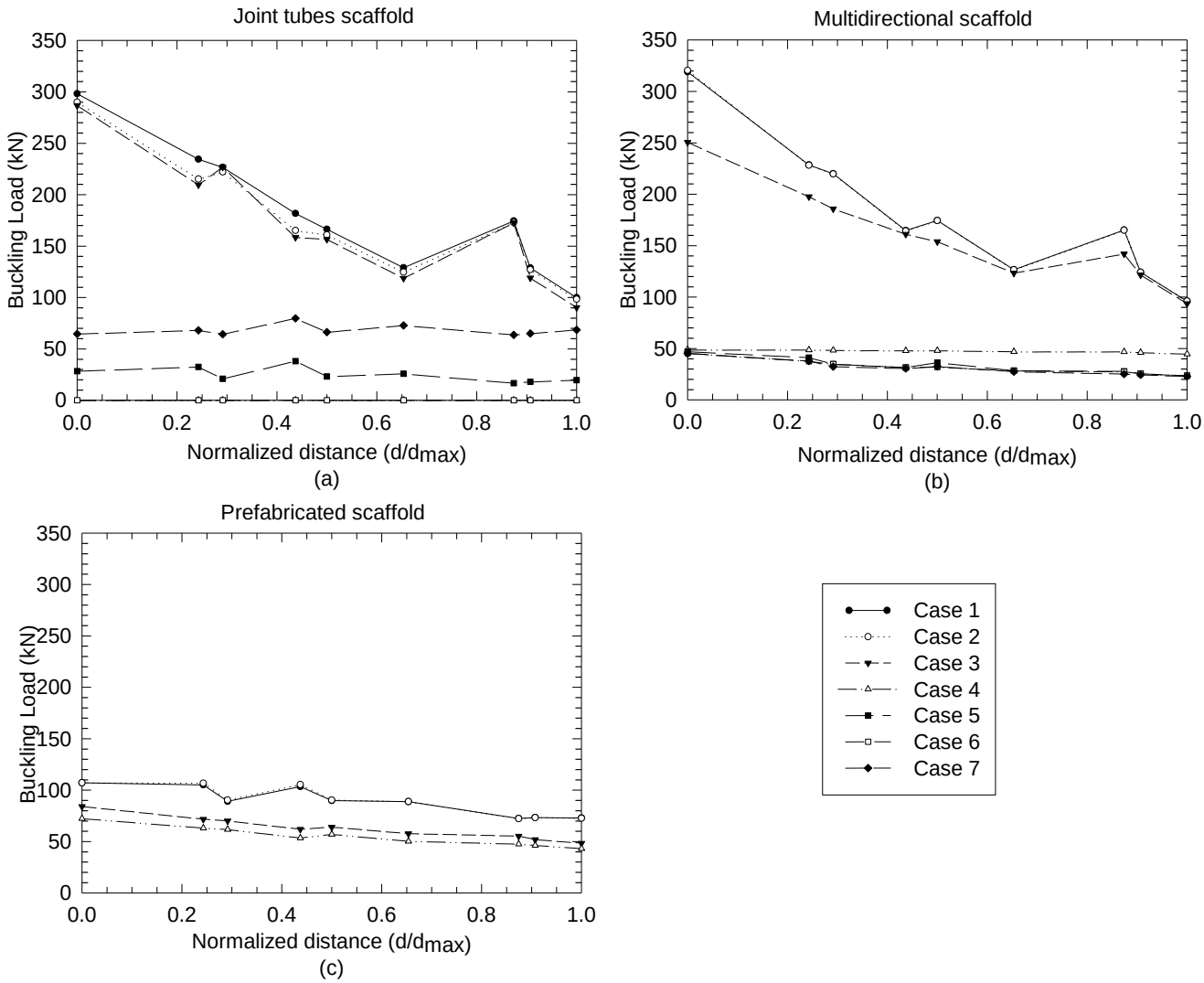

Figure 13 Effect of the building imperfections vs. the normalized distance (1-story, 1-bay). Case 1 corresponds to proper installation

The presence of a *lateral support* gives a similar behavior between the joint tubes and the prefabricated scaffolding for the first story level, while the buckling load decreases when the number of story levels increase. In particular, the behavior of three types of scaffoldings is similar after eight story levels. The *hinge base with lateral support* improves its behavior for eccentric load (Figure 14d) in

particular at the lower story levels, but when compared with the barycentric load (Figure 14b) the buckling load decreases considerably with an eccentric load.

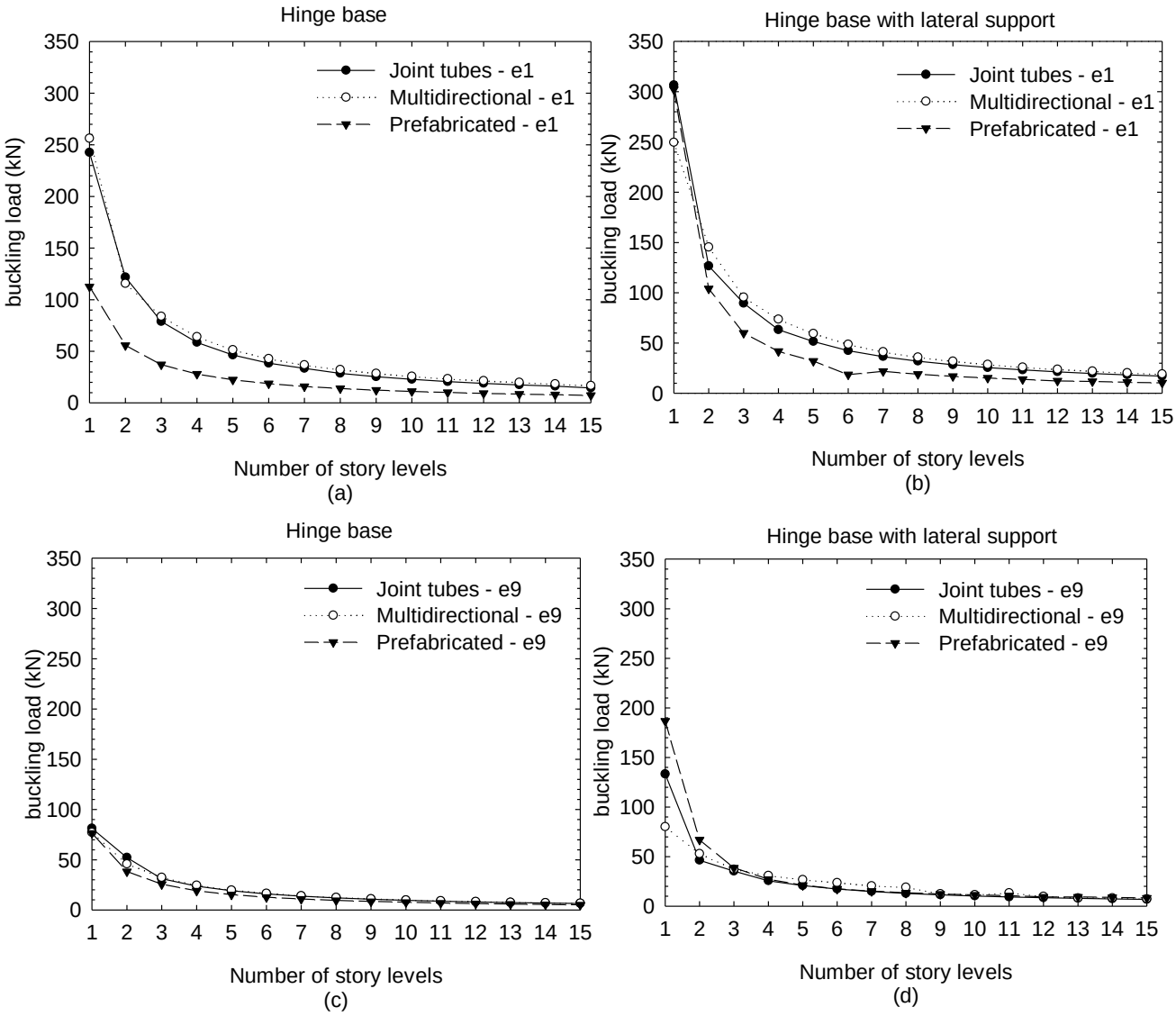

Figure 14 Comparison between the three types of scaffolding systems according to the eccentric load function (see Figure 6) of the number of story levels.

5.4 Comparison with the work of Chan et al (1995)

Previously presented analyses, in particular the multidirectional scaffolding, are compared with the work by Chan et al. [6] showing the differences in the critical loads for different types of scaffoldings

with similar eccentricities. The scaffold system analyzed in the work by Chan et al. is a door-shaped steel scaffold and the work presents the behavior of the scaffolding with different eccentric applied loads. The comparison mainly takes the positions reported in Figure 6. However, for sake of conciseness a couple of them are herein reported: the position 1 (without eccentricities) and position 5, with different boundary conditions and model imperfections. The frame of the door-shaped steel scaffold presents two structures: the first has only one side braced, while in the second the lowest brace is removed. The comparison has been performed using the multidirectional scaffold system which has been designed similarly to the model of Chan.

Table 3 shows the critical loads of the multidirectional steel scaffold and the door-shaped steel scaffold without eccentricities in loading. The different scaffoldings have similar behaviors, because the critical loads between the two analyses maintain almost the same trend with a percentage difference of 50%. However, the critical load of the multidirectional scaffolding is higher with respect to the other one. Moreover, the critical loads of a fixed base scaffolding with lateral support is higher in both type (194.6 kN, 102.9 kN) with respect to the critical loads (52 kN, 22.8 kN) with a hinge based scaffolding without lateral supports. Significant differences can be observed in the two scaffoldings especially the fixed base models with lateral supports with defects. Indeed, with defects the critical load decreases of 4% for the multidirectional scaffold system, while it decreases of 39% for the door-shaped steel scaffold. Finally, for the models without lateral supports and hinged base with defects, the door-shaped steel scaffold has a significant decrease of the critical load compared with the multidirectional steel scaffold.

Table 3 Comparison between scaffolds systems under the concentric load (position 1)

Setup Model	Without eccentricity 1		
Load Type	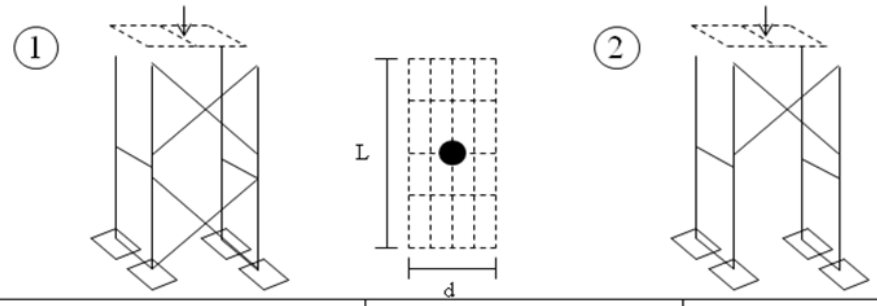		
Configurations		Multidirectional scaffold	D-s scaffold(Chan et al ref.n.2009)
		1 Two storey with brace on one side	
Critical load	Model with lateral support and hinged base	132.9	
	Model w/o lateral support and hinged base	52	22.8
	Model with lateral support and bottom stiffness (1765.8 kNcm/rad)	104.1	62.0 (test) - 58.3 (analysis)
	Model with lateral support and fixed base	194.6	102.9
	Model w/o lateral support and fixed base	185.3	92.4
		2 Two storey one side brace with a removal of the lowest brace	
	Model with lateral support and bottom stiffness (1765.8 kNcm/rad)	99.6	35.7 (test) -35.7 (analysis)
	Model w/o lateral support and hinged base	51	9.4

Table 4 shows the results of the critical load with load eccentricity in position 5. The critical loads for the multidirectional scaffold and the door-shaped steel scaffold for the model without lateral supports for the hinge base are 36.4 kN and 12.7 kN respectively, while for the fixed base are 78.2 kN and 31.5 kN. If the results in Table 4 are compared with the results in Table 3 (without eccentricity), for the hinge base the critical loads are reduced respectively of 30% and 44% while for the fixed base they are reduced of 25% and 46% respectively for multidirectional scaffold and door-shaped steel scaffold. Result shows that the door-shaped steel scaffold is more affected by the eccentric load than the multidirectional scaffold for the fixed base model with lateral support. Instead, the reduction of the critical loads in the fixed base

models with lateral supports when defects are included are 22% and 26% respectively for the two scaffoldings with respect to the case without eccentricity. Moreover, the reduction of the critical loads in the hinge base models without lateral supports when defects are included is about 30% and 16% respectively for multidirectional scaffold and door-shaped steel scaffolds. This result shows that the hinge base model with defects of the multidirectional scaffold is more affected by the eccentric load than the door-shaped steel scaffold.

Table 4 Comparison between scaffolds systems under the eccentric load (position 5)

Setup Model	Eccentricity 5		
Load Type	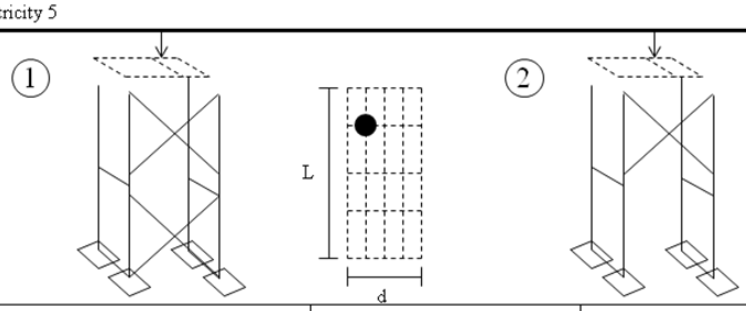		
Configurations		Multidirectional scaffold	D-s scaffold(Chan et al ref.n.2009)
		1 Two storey with brace on one side	
Critical load	Model with lateral support and hinged base	92.5	
	Model w/o lateral support and hinged base	36.4	12.7
	Model with lateral support and bottom stiffness (1765.8 kNcm/rad)	78.2	32.0 (test) - 31.5(analysis)
	Model with lateral support and fixed base	144.8	
	Model w/o lateral support and fixed base	135.8	
		2 Two storey one side brace with a removal of the lowest brace	
	Model with lateral support and bottom stiffness (1765.8 kNcm/rad)	77.6	18.1 (test) -26.4 (analysis)
	Model w/o lateral support and hinged base	35.3	7.9

The comparison of the numerical results shows that for all the eccentric loads there is a percentage difference of about 50% (2:1) between the critical load endured by multidirectional scaffold and the door-shaped steel scaffold. Instead, for the hinged base models without lateral support, the percentage difference

increases to 75% (4:1). The reason of these discrepancies stands in the different geometric dimensions and section areas of the models. To prove this statement, the multidirectional scaffolding hinged based and without lateral support has been remodeled with the same dimensions of the door-shaped steel scaffold a concentric load in position 1 has been applied. The results are that the critical loads of two scaffoldings are similar: 30.3 kN and 22.8 kN. It confirms that the different geometric dimensions mainly cause the discrepancies in the results.

5.5 Limitations of the model

The structural analyses of the different scaffoldings have been realized using the computer software SAP 2000 [20]. The geometric dimensions and properties of the different scaffoldings have been selected from the Mercegaglia Group's handbook [22].

The key elements in the scaffoldings modules are the joints, which have been modeled as *fixed* and *hinge* based. They are the two boundary conditions considered in the analysis, while other effects such as friction at the joints could have been modeled with plastic hinges or rotational springs which have not been considered in the analysis.

Both 1-bay 1-story and multi-story models have been analyzed. Spigots or joints have not been considered between modules in the large assemblies to get high scaffold towers. Structural flaws such as material defects and misalignment of the structural tubes have also not been considered in the models. In all the configurations, it is assumed that the scaffolding is installed without imperfections. Only structural configuration deficiencies have been investigated, e.g. diagonal bracing member missing or improperly placed. Imperfections can reduce buckling loads by over 50% [26,27].

The effect of soil-structure interaction could have also been modeled using Winkler soil, but it has not been taken into account in this paper. Only gravity load has been considered during the analysis while both wind and earthquake loads are not been considered at his stage.

5.6 Proposed formula

The analysis of the numerical results obtained for the different types of scaffoldings have been collected and an empirical formula has been proposed which enables determining the critical load of a scaffold system considering few parameters. Analytically the critical load is given by the following expression

$$P_{critical} = A + \frac{\alpha}{n} \tag{1}$$

where A and α are two coefficients defined according to the scaffolding type and the position of the loads, n is the number of story levels. All the coefficients are listed in Table 5, where only the centric (e1) and maximum eccentric load (e9) have been considered.

Table 5 Coefficients for Equation (1) for different scaffoldings

		A		**α**	
Typology	**Eccentricity**	**Hinge**	**Hinge+lat**	**Hinge**	**Hinge+lat**
JT	e1	-1.680	-6.740	244.260	302.522
MD	e1	0.044	5.382	251.909	253.173
PS	e1	-0.041	-20.416	111.419	301.068
JT	e9	1.895	-4.117	83.706	129.288
MD	e9	2.871	6.390	77.628	79.811
PS	e9	-0.093	-10.387	76.638	184.387

The goal of the proposed formula is estimating the buckling load of the scaffolding at the construction site without running numerical analyses. In fact, FE models allow evaluating the critical load as well as

the ultimate load. However, during the construction phase, several modifications of the structure can occur on site with respect to the initial configuration, therefore a new FE model is necessary every time. The advantage of the proposed formula is to allow evaluating the critical load quickly on site without running analysis or building new FE models, but maintaining the same accuracy. In Figure 15 and Figure 16 is shown the comparison of the proposed empirical formula with the results of the FE models. The comparison showed a good fit for all the three types of scaffoldings both with centric and eccentric load.

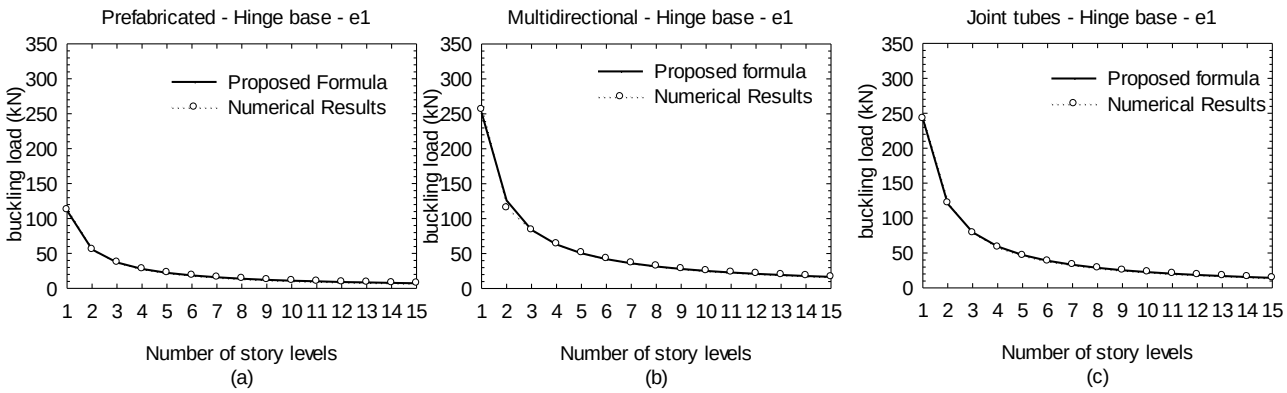

Figure 15 Comparison between the proposed formula and the FEM results with different scoffodings for the hinge base with centralized external load

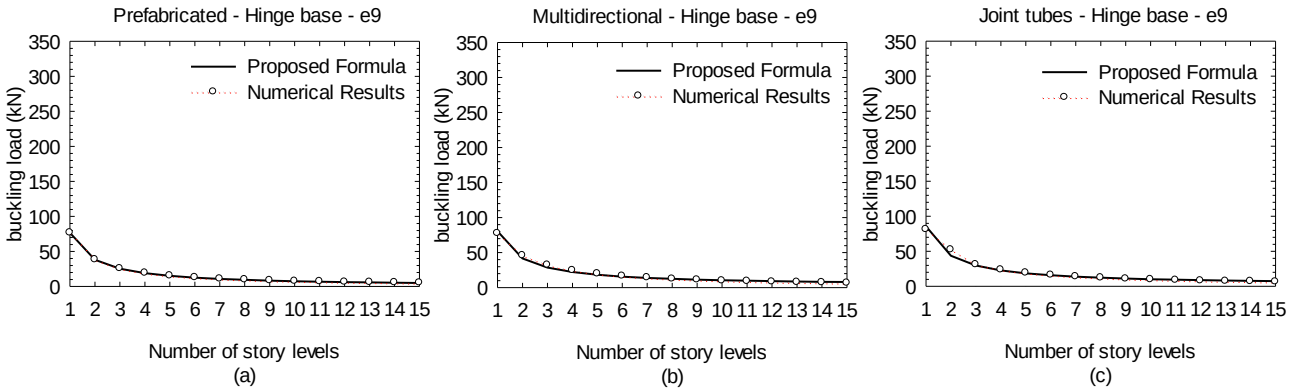

Figure 16 Comparison between the proposed formula and the FEM results with different scaffoldings for the hinge base with eccentric loads

The parameters in Table 5 have been calibrated specifically for the structural configurations and modelling assumptions herein considered (e.g. in Section 5.5). Additional numerical and experimental tests are need in order to extend the application of the formula in Equation (1) to other systems and conditions. Once performed a proper calibration of the parameters with respect to the specific problem under study, the proposed formula can be considered as a useful tool to predict the buckling load in scaffoldings. It can be used at the construction site whenever, for example, there is a variation of the configuration of the scaffold system and there is need for a rapid re-evaluation of the performance at the site.

6. CONCLUDING REMARKS

In the paper three types of steel scaffoldings, which are commonly used in Italy, are studied using finite element models. Sensitivity analysis is performed to identify the parameters which affect the collapse load under different level of eccentricity of the vertical load applied.

Numerical results show that the *joint tubes* and *multidirectional scaffolds* have similar behavior, because they have similar geometries and dimensions. Instead, the *prefabricated scaffolding system* presents different results because of the structural design and dimensions. Multi-story levels scaffoldings do not influence the critical load, which is instead affected by the eccentricity of the applied vertical load and by the type of external boundary conditions. Numerical analysis also show that the presence of manufacturing imperfections generates a reduction of the vertical collapse load, which increases exponentially if the number of vertical elements removed is greater than two.

A comparison with an existing research in literature has been performed: a door-shaped and a multidirectional scaffolds are considered with different eccentricities, boundary conditions and imperfections. The results show that the door-shaped steel scaffold is more affected by the eccentric load than the multidirectional scaffold for the fixed base model with lateral support. Instead the opposite occurs when the hinge base model with defects is considered.

Finally, an empirical formula that predicts the critical load of a generic scaffolding system, both with centric and eccentric load, is proposed. It allows a rapid performance evaluation without running numerical analysis and represents a straightforward method to predict the buckling load for different scaffoldings. It can be used at the construction site whenever there is a variation of the configuration of the scaffolding for a rapid performance re-evaluation. However, the proposed empirical formula can not be considered as an alternative to proper structural analyses.

7. Acknowledgements

The research leading to these results has received funding from the European Research Council under the Grant Agreement n° ERC_IDEAL RESCUE_637842 of the project IDEAL RESCUE-Integrated Design and Control of Sustainable Communities during Emergencies. Special thanks to Mr. Pau Guillamón Causi and Alex Grilli for the assistance in editing the figures of the paper.

REFERENCES

[1] Ros L. Gli infortuni nel settore delle costruzioni (in Italian). Treviso: SPISAL Azienda ULSS 9; 2001.

[2] Zhang Z, Ke L. Safety accident of formwork engineering and its prevention in China. *Architectural Technology*. 2008;39:492-6 (in Chinese).

[3] Hadipriono F, Wang H. Causes of falsework collapses during construction. *Structural Safety*. 1987;4:179-95.

[4] Peng JL, Pan, A. D., Rosowsky, D. V., Chen, W. F., Yen T., and Chan, S. L. High Clearance scaffold systems during construction - 2. Structural analysis and development of design guidelines. *Engineering Structures*. 1996;18:258-67.

[5] Yu WK, Chung KF, Chan SL. Structural instability of multi-storey door-type modular steel scaffolds. *Engineering Structures*. 2004;26:867-81.

[6] Chan SL, Zhou ZH, Chen WF, Peng JL, Pan AD. Stability analysis of semirigid steel scaffolding. *Engineering Structures*. 1995;17:568-74.

[7] Peng JL, Pan AD, Rosowsky DV, Chen WF, Yen T, Chan SL. High clearance scaffold systems during construction - 1. Structural modelling and modes of failure. *Engineering Structures*. 1996;18:247-57.

[8] Weesner LB, Jone HL. Experimental and analytical capacity of frame scaffolding. *Engineering Structures*. 2001;23:592-9.

[9] Yu WK, Chung KF, Chan SL. Axial buckling of bamboo columns in bamboo scaffolds. *Engineering Structures*. 2005;27:61-73.

[10] Chung KF, Yu WK. Mechanical properties of structural bamboo for bamboo scaffoldings. *Engineering Structures*. 2002;24:429-42.

[11] Peng J-L, Chen K-H, Chan S-L, Chen WT. Experimental and analytical studies on steel scaffolds under eccentric loads. *Journal of Constructional Steel Research*. 2009;65:422-35.

[12] Zhang H, Chandrangsu T, Rasmussen KJR. Probabilistic study of the strength of steel scaffold systems. *Structural Safety*. 2010;32:393-401.

[13] Liu H, Zhao Q, Wang X, Zhou T, Wang D, Liu J et al. Experimental and analytical studies on the stability of structural steel tube and coupler scaffolds without X-bracing. *Engineering Structures*. 2010;32:1003-15.

[14] Chandrangsu T, Rasmussen KJR. Investigation of geometric imperfections and joint stiffness of support scaffold systems. *Journal of Constructional Steel Research*. 2011;67:576-84.

[15] Chandrangsu T, Rasmussen KJR. Structural modelling of support scaffold systems. *Journal of Constructional Steel Research*. 2011;67:866-75.

[16] Zhang H, Rasmussen KJR, Ellingwood BR. Reliability assessment of steel scaffold shoring structures for concrete formwork. *Engineering Structures*. 2012;36:81-9.

[17] Prabhakaran U, Beale RG, Godley MHR. Analysis of scaffolds with connections containing looseness. *Computers & Structures*. 2011;89:1944-55.

[18] Błazik-Borowa E, Szer J. The analysis of the stages of scaffolding "life" with regard to the decrease in the hazard at building works. *Archives of Civil and Mechanical Engineering*. 2015; 15(2):516-524.

[19] Błazik-Borowa E, Gontarz J. The influence of the dimension and configuration of geometric imperfections on the static strength of a typical façade scaffolding. *Archives of Civil and Mechanical Engineering*. 2016; 16(3):269-281.

[20] CSI. SAP2000-Linear and Nonlinear Static and Dynamic Analysis and Design of Three-Dimensional Structures. Berkeley, California, USA: Computers and Structures, Inc.; 2012.

[21] Bruneau M, Uang C-M, Sabelli R. Ductile Design of Steel Structures, 2nd Edition: McGraw-Hill; 2011.

[22] Marcegaglia_Group. Scaffolding systems. In: Marcegaglia_Construction_Equipment_Division, editor. Milano: Marcegaglia; 2012.

[23] OSHA - Occupational Safety and Health Administration, Safety Standards for Scaffolds Used in the Construction Industry;Final Rule. U.S. Department of Labor. August, 30, 1996.

[24] BS EN 12811:2003, Temporary works equipment. Scaffolds. Performance requirements and general design. European Standard, 2003.

[25] BS EN 12812:2008, Falsework. Performance requirements and general design. European Standard, 2008.

[26] Beale R. Scaffold research – a review. *Journal of Constructional Steel Research*. 2014; 98(1):188-200.

[27] Andresen J. Investigation of a collapsed scaffold structure. *Proceedings of the Institution of Civil Engineers – Forensic Engineering.* 2012; 165(2):95-104.