POLITECNICO DI TORINO
Repository ISTITUZIONALE

Modeling and validation of aircraft mathematical models for the development of an innovative Flight Management System

Original
Modeling and validation of aircraft mathematical models for the development of an innovative Flight Management System / Battipede, Manuela; Cassaro, Mario; Gili, Piero; Gunetti, PAOLO GIOVANNI MICHELE. - ELETTRONICO. - (2011), pp. 1-10. (Intervento presentato al convegno CEAS 2011 The International Conference of the European Aerospace Societies tenutosi a Venezia nel 24-28 october 2011).

Availability:
This version is available at: 11583/2460931 since: 2019-01-09T18:02:01Z

Publisher:
CEAS

Published
DOI:

Terms of use:

This article is made available under terms and conditions as specified in the corresponding bibliographic description in the repository

Publisher copyright

(Article begins on next page)

19 April 2024

Modeling and validation of aircraft mathematical models for the development of an innovative Flight Management System

M. Battipede, M. Cassaro, and P.Gili
Dipartimento di Ingegneria Aeronautica e Spaziale, Politecnico di Torino, Italy
P. Gunetti
Department of Automatic Control and Systems Engineering, University of Sheffield, UK

Keywords: *aircraft simulation, clean sky, modeling, validation,*

Abstract

This paper reports the experience of the MAS_Lab (Multipurpose Aircraft Simulation Laboratory) project, developed at the Politecnico di Torino within the Clean Sky ITD Systems for Green Operations. The complete project environment is briefly described and the MAS_Lab tasks are discussed. Modeling design choices are investigated, highlighting those concerning simulator structure and automatic flight control laws; the validation process is described, focusing on the techniques used to assess model accuracy. Examples of results obtained during the validation campaign are presented, with the intention of showing how model validation and autopilot performance are considered satisfactory.

List of acronyms:

FMS flight management system; AP autopilot; FD flight director; ALT altitude hold mode; LOC localizer mode; APP approach mode; ATHR autothrottle; FPA flight path angle; HDG heading; V/S vertical speed; s_p stabilizer angle; θ_B body attitude angle; α angle of attack; F_N engine net thrust; H.F. horizontal flight.

1 General Introduction

The Management of Trajectory and Mission (MTM) aims at developing technologies to reduce emissions (CO2, NOx) and noise through the 4D trajectory optimization. Since the systems developed for trajectory and mission optimization need to be inserted into the overall economic model of the operators (the airlines), some knowledge needs to be gained on how those economical models will influence operators attitude when it comes to choosing between environmental impact and economic performance. This will enable to associate a "cost" to each generated trajectory. In this respect, the following items need to be developed, as summarized in figure (1):

- an environmental impact model to compute the noise related to the aircraft operations as well as the amount of carbon dioxide, nitrogen oxides and water vapor released in the high atmosphere;
- a set of aircraft models, sufficiently detailed for the purpose [1] [2];
- cost model to get the required economical data.

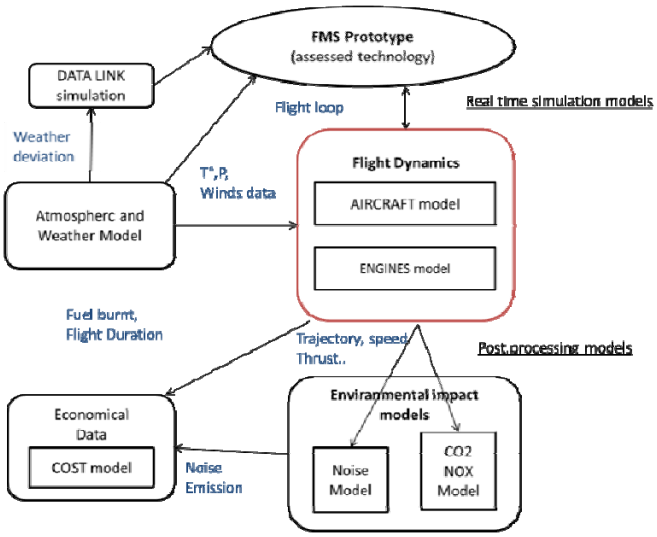

Fig. 1 - Project Environment

The MAS_Lab project is focused on the aircraft models development (red box in Fig. 1). In particular the tasks outlined in the project can be listed as follows:

- Define the simulator specifications in terms of major features, such as hardware/software, development environment, but also in terms of what the simulator must be able to model and to which extent.
- Verify and validate the model according to the definitions given by the VV&A Recommended Practice Guide of the DoD Model & Simulation Coordination Office [6].
- Implement the simulator, including the interfaces.
- Maintain and improve the simulator throughout the whole Clean Sky duration.
- Introduce the knowledge of state-of-the-art simulation technology within the consortium and promote the dissemination of the technical and scientific results achieved during the project, among the partners and the international community also in non- aeronautical contexts.

The MAS_Lab project consists, more in detail, in the design of a so called *Master Model* in which four aircraft, concerning different categories, ranging from wide-body to regional jet, are modeled. Three of the four models are referred to existing aircrafts: B747-100; ATR 42-500 and CESSNA Citation CJ3; while the fourth is a non-existent model, which can be defined by the user through a limited set of parameters.

2 *MAS_Lab Master Model* structure

The MAS_Lab *Master Model* is implemented using the Matlab\Simulink® environment. To achieve the objectives listed in the previous section a modular configuration of the simulator was used. This choice was due to the simplicity of finding and correcting errors with this method, and because it is the most suitable configuration, considering the parallel development of several aircraft models in the same simulator.

Figure 2 shows the main external loop of the simulator composed by the three blocks, as follows: Pilot; AFCS and Aircraft dynamics. The Pilot block concerns the logic interface built to allow the user, or the FMS, to act on the simulated aircraft by means of a cockpit, or direct connection. The AFCS block contains all the autopilot's control laws that can be used to control the airplane or to give visual cues to the pilot when acting as flight director. The Aircraft dynamics block contains the four different aircraft models and the blocks solving the state equations, so it is the core of the simulator. Using various enable-switches, it is possible to change between highly different aircraft without changing the model structure.

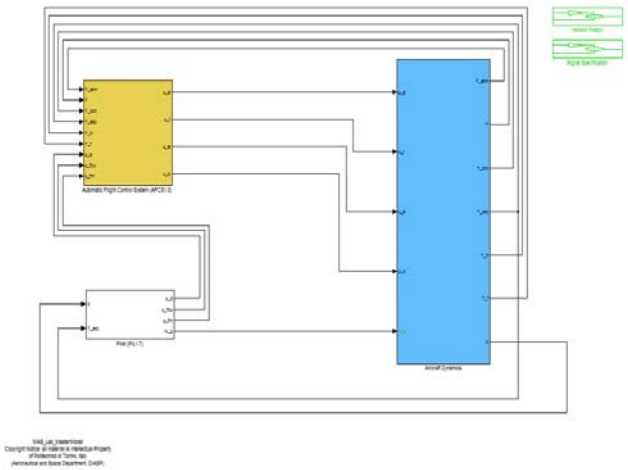

Fig. 2 - *Master Model* main external loop

2.1 Pilot

This block consists of several components in which all the external command are transformed in signals compatible with the rest of the model. More in detail it contains the following blocks:

- *Joystick*

This block enables the user to act on the aircraft control thus commanding the longitudinal, lateral, directional and thrust control inputs. Controls for flaps, stabilizer, speedbrakes, steering wheel and brakes are also present. The vector *u_p* collects all data from this block

- *Flight Control Unit*

The purpose of this device is to enable the user (pilot) to manage the autopilot manually during flight. The FCU implemented is composed by three different types of buttons: switch push buttons, on/off push buttons and triple action buttons.

Switch push buttons are used to select the reference parameter for the AP. For example, they are used to switch from Mach to Speed value and from FPA to VS.

On/off push buttons are used to activate/deactivate the autopilot and their specific functioning modes. For example the AP and ATHR buttons engages the AP and the ATHR while the ALT, LOC and APPR buttons activate the corresponding guidance modes.

Triple action buttons are used to manually control the autopilot target or to enable the FMS control of the same target. For example, by pulling and rotating the knob, the user can control speed, lateral (heading) and vertical (altitude or V/S) targets. Whereas by pushing the buttons the FMS control is enable.

2.2 Automatic Flight Control System

After a deep study on the autopilots and their mode selection logic, a unique AFCS configuration was chosen for all the simulated aircraft. This means that all the aircraft have the same autopilot, divided into longitudinal, lateral-direction autopilot and auto throttle, but obviously with different control laws. The structure of the AFCS and its validation process will be detailed in Section 4.

2.3 Aircraft dynamics

The A/C dynamics block, Fig.3, contains the four aircraft non-linear models and is thus the core of the simulator. It is able to evaluate the response of the aircraft as a function of the different command and atmospheric inputs and return the step-by-step time evolution of the system (a discrete time integrator was used to solve the equations of motion).

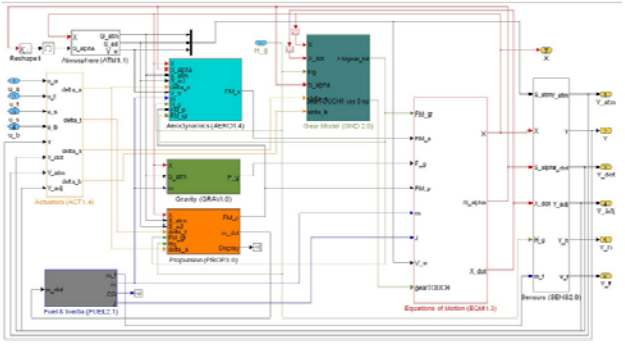

Fig. 3 - Aircraft dynamic model's structure

The block is divided into:

- *Actuators block*

The aircraft actuators (elevators, ailerons, rudders, flaps and stabilizer) are accurately modeled through the use of look-up tables that reproduce the dynamic response, the mechanical inter-connections and the blow-out limitations of each control surface.

- *Aerodynamic block*

On the basis of the control surface deflection signals, coming from the actuators block, this block is used to compute the aerodynamic forces and moments in body axes reference frame: several look-up tables are used in order to take account of various aerodynamic effects such as dynamic coupling and ground effect.

- *Gravity block*

Evaluates the gravity forces in body axes.

- *Propulsion block*

Contains the models of the aircraft engines, computing propulsive forces and moments in body axes in every flight condition.

- *Fuel & inertia block*

It simulates the mass properties (c.g. position and inertial tensor) of the aircraft as a function of the initial gross weight and the fuel consumption.

- *Gear model*

It simulates the gear reactions when in contact with the ground, and expresses the resultant forces and moments in body axes reference frame.

- *Equations of motion block*

This is the real core of the simulator. By taking into account all the external forces and moments acting on the aircraft and their mass and inertial properties, in this block the six DoF non-linear equation of motion are implemented and solved with the numerical Runge-Kutta method. The state vector *x* of the aircraft, composed by the linear and angular position, velocities and accelerations, are obtained. The body axes reference frame is used for this purpose.

- *Atmosphere block*

It calculates the physical properties of the atmosphere. It implements the ISA model, but can be connected to an external model if a more realistic one is necessary.

- *Sensors block*

It models the sensors of the aircraft, including radio navigational aids which are used to control the ILS landing.

3 *MAS_Lab* Verification and Validation

In order to assess the accuracy, coherence and consistency of the simulator, a significant effort was spent in performing the verification and validation (V&V) process. The V&V Plan is based on documentation published by the Defense Modeling and Simulation Office (DMSO) of the American Department of Defense (DoD). These Recommended Practice Guides (RPG) on Verification, Validation and Accreditation (VV&A) allow to establish guidelines and methodologies that can be expected to result in meaningful V&V campaigns [6]. It is to be noted that the V&V process can be completed only if the aircraft model is completed itself. As a consequence only the B747-100 model was validated at the state of the art of the simulator, as hereafter reported. Following the reference guidelines, table with 21 different tests was created and accomplished for the B747-100 validation. As shown in Fig.4, V&V tests are performed primarily (Phase 1) at a system level (e.g. A1.T3 correspond to engine static thrust test or A1.T6\7 to longitudinal and lateral control system test) and then (Phase 2 and 3) are extended to the whole model on three different levels:

- statics
- dynamics
- performance (statics and dynamics)

For example tests A1.T9 to A1.T11 correspond to trim condition test, whereas tests A1.T12 to A1.T15 correspond to the dynamic test performed on the linearized aircraft model and tests A1.T16 to A1.T21 are the performance test carried out on the complete non-linear aircraft model.

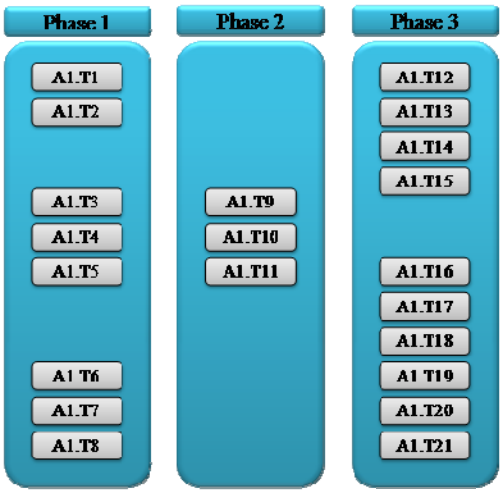

Fig. 4 - B747-100 V&V test scheduling

The level of accuracy of the results obtained is guaranteed by the high fidelity of the sources used as reference for comparison purpose (e.g. NASA certified simulator data and BOEING experimental data [7]).

3.1 Validation results

Because of the project purpose, the propulsive system is the most important component of the simulator. Since showing the results of the entire validation campaign is beyond the scope of this paper, the propulsion system will be used as an example to show the validation process.

In the first phase, the test purpose is to verify the accuracy of the system models, as aerodynamic, propulsive and control system.

First of all, each block is statically tested. Correspondences of input\output combinations with reference data are checked. For example, two different test types are performed on the propulsion system. In the first case the maximum excursions of the Thrust Lever Angle are checked, for the forward and reverse positions, for both cases maximum and idle static thrust is checked by comparing the engine block output data. In the second test, the same comparison is done for the static thrust obtained for different Mach and EPR values.

In the second phase, the whole aircraft model is tested by analyzing the equilibrium points of the model. The simulated airplane is statically trimmed at several variations of weight, c.g. positions, altitude, speed and flap positions. Computed value of s_p, θ_B, α and F_N (engine thrust) are compared to literature data. The effects of configuration changes, landing gear and speed brake positions are evaluated.

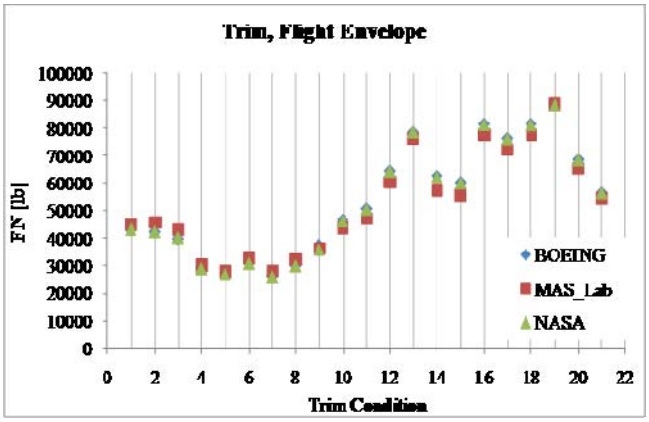

Fig. 5 - B747model's thrust validation (H.F.)

Figure 5 is an example of the test carried out in this phase and of the most relevant results. The test sequence does not follow well defined criteria, for this reason it is impossible to highlight a specific trend in the parameter's variation. However it is clear that the level of accuracy of the thrust's results follows the stringent requirements established for the simulator purpose, as reported in Table 1.

	maximum abs.error %	minimum abs. error %	average on 22 conditions
F_N	7.31	0.45	4.62%

Table. 1 - B747 model thrust percentage error (H.F.)

These results, matched with the fuel model, bring to an average error of fuel consumption of 5% as expected by the simulator requirements.

In the third phase, the model dynamic and performance are tested by means of several computational tools (e.g. trim and linearization algorithms) and non-linear simulation. In particular two different tests concerning the dynamic analysis of the aircraft model are performed.

In the first test, the aircraft modes (short period, phugoid, dutch roll and roll mode) dynamic features are calculated in terms of damping ζ and natural frequency ω_n: the aircraft is trimmed in a specific flight conditions and the equations of motion are linearized. In practice, every flight condition generates a new linear model expressed in terms of transfer functions.

In the second test, the aircraft modes are excited by an elevator input (longitudinal dynamics) or a $\beta \neq 0$ initial condition (lateral-directional dynamics). Results are obtained running a simulation of the non-linear aircraft model, recording the time history and comparing them with the literature data.

The aircraft performance tests are performed by manual or automatic piloting of the simulated aircraft. Different mission profiles are reproduced by the non-linear simulation and then recorded data compared with literature reference data. Three types of maneuvers are accomplished: take-off, climb and acceleration/deceleration.

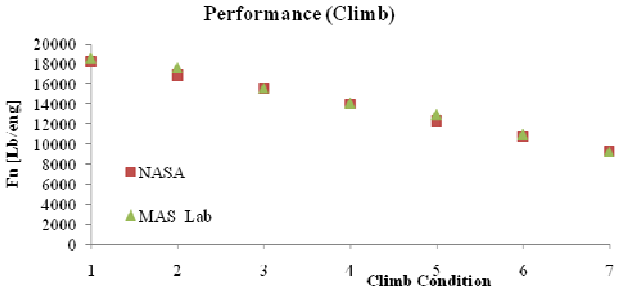

Fig. 6 - B747 model thrust validation (Climb)

As shown in Figure 6, six different climb conditions are analyzed, covering the entire flight envelope in terms of altitude (from sea level to maximum altitude) and at maximum thrust. The test sequence shows the high level of consistency of the MAS_Lab model response,

compared with literature data. For example, for the parameters reported in Table 2, it is possible to notice that not only the reference trend is followed, but also that the absolute errors are very small. Because the project goals require excellent modeling of fuel consumption and trajectory management, the accuracy and consistency of climb maneuvers are critical in assessing MAS_Lab, and the obtained results are satisfactory.

	maximum abs.error %	minimum abs. error %	average on 6 conditions
F_N	5.29	0.21	2.26%

Table. 2 - B747 model thrust percentage error(Climb)

4 Automatic Flight Control System: modeling and validation

Modern Flight Management Systems (FMS) are capable not only of automatically generating a detailed flight plan, but also of executing most of it. To do this, they are appropriately interfaced with the Automatic Flight Control System (AFCS) on-board the aircraft. As the MAS_Lab is primarily intended as a tool to test and validate an innovative FMS, the aircraft AFCS should be accurately modeled and an interface with the FMS ensured.

Because autopilots are a commercial product, it is very difficult to retrieve detailed information regarding their performance and the implemented control laws. The NASA document used throughout MAS_Lab for the Boeing 747-100 model [8] provides a rather detailed description of the autopilot system; however, this description focuses on the electromechanical aspects of the system, and its implementation in Simulink would require modeling all the electrical connections and the related mechanical actuator dynamics. Furthermore, autopilots of the 747-100 period (1960-70) provided specific control modes which are not used anymore, while missing control modes that are now commonly implemented; also, these autopilots were never meant to be controlled by a FMS.

For these reasons, it was decided that the MAS_Lab AFCS was to be based on the Boeing 747-400 AFCS rather than the Boeing 747-100; all relevant control modes were to be implemented from scratch, so as to ensure the possibility to use the AFCS both manually (pilot controlling the AFCS) and automatically (FMS controlling the AFCS). Seamless transition between the two possibilities was to be ensured, as in fact is normal on real modern aircraft, where the FMS controls most of the flight with the pilot intervening at times to change parts of the flight (for example as a response to an ATC directive).

In the following subsections, the 747 AFCS as modeled in MAS_Lab will be described, focusing first on the available control modes, then on the actual control laws, and finally on the corresponding validation process. It is to be noted that the 747 AFCS model will also be used for the other aircraft, though of course the control law gains will have to be recalculated and some control modes might not be available on a specific aircraft.

4.1 AFCS modes

The AFCS functionality can easily be decomposed into three separate parts: pitch control, roll control and auto-throttle. Several control modes are available for each, which can mostly be activated independently (although some interdependency is present).

The following pitch control modes are modeled in the MAS_Lab AFCS:

- *Manual or MAN (1)*: the autopilot keeps a fixed pitch angle provided by the pilot;
- *Altitude Hold or ALT (2):* the autopilot captures and keeps the target altitude;
- *Vertical Speed Hold or VS (3):* the autopilot keeps a pilot-defined vertical speed;
- *IAS Hold or IAS (4):* the autopilot maneuvers the aircraft on the pitch axis in order to maintain a desired airspeed (note that the throttle must be set to a fixed value);
- *Glide-Slope or GS (5):* the autopilot maneuvers the aircraft to follow the Glide-Slope signal of an ILS, executing flare and rollout once landing is obtained;

• *Take-Off/Go-Around or TOGA (6):* the autopilot keeps a pre-defined constant pitch attitude that ensures a positive rate of climb, to be used during take-off and go-around maneuvers;
• *VNAV Path (7):* this is equivalent to the Manual mode, but the commanded pitch angle is provided by the Flight Management System;
• *VNAV SPD (8):* this is equivalent to the IAS Hold mode, but the commanded airspeed is provided by the Flight Management System;
• *VNAV ALT (9):* this is equivalent to the Altitude Hold mode, but the commanded altitude is provided by the Flight Management System;

The following roll control modes are modeled in the MAS_Lab AFCS:

• *Manual or MAN (1):* the autopilot keeps a fixed roll angle provided by the pilot;
• *Heading Hold or HDG (2):* the autopilot captures and keeps the target heading;
• *Track Hold or TRK (3):* a variant of HDG, the autopilot keeps a precise constant-heading route defined by a starting position;
• *Localizer or LOC (4):* the autopilot maneuvers the aircraft to follow the Localizer signal of an ILS;
• *Take-Off/Go-Around or TOGA (5):* the autopilot keeps wings leveled during take-off and go-around maneuvers;
• *LNAV (6):* this is equivalent to the Manual mode, but the commanded roll angle is provided by the Flight Management System;

The following auto-throttle modes are modeled in the MAS_Lab AFCS:

• *Thrust Reference or THR REF (1):* in this mode, one of several pre-defined fixed throttle values is kept (e.g. IDLE, TAKE-OFF, etc.);
• *Speed Hold or SPD (2):* the auto-throttle controls thrust to maintain a desired airspeed;
• *Mach Hold or Mach (3):* the auto-throttle controls thrust to maintain a desired Mach;
• *Managed THR REF(4):* a direct throttle command is provided by the FMS;
• *Managed SPD(5):* this is equivalent to the SPD mode, but the commanded airspeed is provided by the Flight Management System;
• *Managed Mach (6):* this is equivalent to the Mach mode, but the commanded Mach is provided by the Flight Management System;

The mode selection logic has been implemented using Stateflow, in order to represent the many safeguards that are applied on the actual AFCS; for example, activation of the *IAS* pitch mode inhibits activation of the *SPD* auto-throttle mode (as the two are not compatible). Also, some modes can be armed and then activated when appropriate conditions are met; for example, the *S* and *LOC* modes are armed and then activated when the relative signal deviation is below a specified threshold.

4.2 Control laws

The main pitch control loop is shown in Figure 7; it is a traditional autopilot design which uses pitch angle and pitch rate signals to calculate the elevator displacement. The signals are appropriately filtered and gain scheduling is employed to ensure a good response throughout the flight envelope.

The nine pitch control modes are applied externally to the main loop, providing a desired pitch angle value. For each mode, appropriate sensor signals are used to compute the pitch angle required to achieve the condition. As an example, the altitude and altitude rate signals are processed to compute the pitch angle required to reach and maintain the desired altitude in the ALT mode. A roll compensation signal is added to avoid altitude loss during lateral maneuvers. Figure 8 shows how the model switches between the various control laws.

A similar strategy is used for the roll control part: the main control loop uses roll angle and roll rate signals to calculate the aileron displacement, whereas the desired roll angle value is provided by the various roll control modes. The roll control modes are usually simpler than pitch control modes; due to the slow latero-directional response of the aircraft, in fact, a proportional signal is sufficient, without the need of derivative signals.

The auto-throttle is conceived differently, as there is no inner loop and each mode directly controls the throttle needed to achieve the desired reference value. As an example, Figure 9 shows the Speed Hold control law. It uses filtered airspeed proportional and derivative

signals to calculate the throttle value; gain scheduling is applied to ensure smooth response throughout the flight envelope and specific rules are used for speed control during landing (e.g. throttle retard function).

4.3 AFCS model validation

As previously stated, autopilots are commercial products and it is difficult and costly to obtain actual performance data. For this reason, thorough validation of the dynamic response of the MAS_Lab AFCS was not feasible. Instead, the validation process was focused on checking static behavior and on a qualitative analysis of dynamic response.

A total of nine test types have been prepared in order to validate AFCS functionality. To ensure sufficient coverage of the flight envelope, each test is repeated starting with three different initial trimmed configurations:

• *condition 1*: 30000 ft, 0.72 Mach, 400000 lb gross weight, c.g. position at 32% M.A.C.

• *condition 2*: 5000 ft, 0.41 Mach, 564000 lb gross weight, c.g. position at 25% M.A.C.

• *condition 3*: 15000 ft, 0.55 Mach, 680000 lb gross weight, c.g. position at 14% M.A.C.

The validation tests for the MAS_Lab AFCS are as follows:

• *test 1*, ALT mode test: starting from the trim condition, a limited altitude change (±500 ft and ±1000 ft) is commanded, with the auto-throttle in SPD mode; ALT mode and main pitch loop dynamic response are evaluated;

• *test 2*, VS mode test: starting from the trim condition, an altitude change (±3000 ft and ±5000 ft) is commanded, with the auto-throttle in SPD mode and a required VS (±1000 ft/min and ±1500 ft/min); VS mode and main pitch loop dynamic response are evaluated;

• *test 3*, IAS mode test: starting from the trim condition, an altitude change (±3000 ft and ±5000 ft) is commanded, with the auto-throttle in THR REF mode and a required IAS (current speed ±20 kt); IAS mode and main pitch loop dynamic response are evaluated;

• *test 4*, SPD mode test: starting from the trim condition, a speed variation (±20 kt, ±40 kt and ±80 kt) is commanded, with ALT mode keeping constant altitude; SPD mode dynamic response is evaluated;

• *test 5*, Mach mode test: starting from the trim condition, a Mach variation (±0.05 and ±0.1) is commanded, with ALT mode keeping constant altitude; Mach mode dynamic response is evaluated;

• *test 6*, HDG mode test: starting from the trim condition, a heading angle change (±30 deg, ±60 deg and ±135 deg) is commanded; HDG mode and main roll loop dynamic response are evaluated;

• *test 7*, auto-transition tests: various tests are run to verify the functionality of automatic mode transitions (such as VS/IAS to ALT when target altitude is reached, SPD to THR REF when IAS is engaged);

• *test 8*, auto take-off test: the automatic take-off function is tested using different configurations (weight and c.g. position);

• *test 9*, ILS test: starting from various low-altitude trim conditions, ILS capture and track are tested; focus is placed on activation of modes and verification of approach profile (vertical – GS and lateral - LOC);

Figures 10 and 11 show a test example; these are the plots of altitude and pitch angle obtained for test 2, executed from condition 3 with an altitude change of 5000 ft and a VS of 1000 ft/min. In this case, the AFCS was judged satisfactory.

It is to be noted that AFCS dynamic response cannot be guaranteed to exactly reproduce the actual behavior of the aircraft, unless the data describing the performance of the actual AFCS is available.

5 Conclusion

Modeling and Validation process was completed with satisfactory results for the B747-100 model. Accuracy, consistency and coherence are the main features of the simulator. It is already able to fly with a Microsoft® Flight Simulator graphical interface. It is also ready to be interfaced with the innovative Flight Management System provided by a partner of the Clean Sky project. For the next future it is planned the completion of the other three

aircraft models. However their modeling seems to be faster starting from the knowledge and experience acquired in this first phase of the MAS_Lab project.

References

[1] Stevens B. and Lewis F., *Aircraft Control and Simulation*, J. Wiley & Sons, 2004.

[2] Etkin B. and Reid L., *Dynamics of flight: Stability and Control*, J. Wiley & Sons, 1996.

[3] Rauw M.O., "*Using SIMULINK for Nonlinear Analysis of Aircraft Control Systems*", Interim report, Delft University of Technology (Aerospace Engineering), Delft, 1992.

[4] Rauw, M.O., "*A SIMULINK Toolbox for Flight Dynamics and Control Analysis*", FDC 1.4, Draft version 7, May 25, 2005.

[5] Rauw, M.O., "*A SIMULINK environment for Flight Dynamics and Control analysis-application to the DHC-2 'Beaver'*", Delft University of Technology (Aerospace Engineering), Delft, 1993.

[6] U.S. Department of Defense. "*DoD Modeling and Simulation (M&S) Verification, Validation, and Accreditation (VV&A)*". DoD Instruction 5000.61. May 13, 2003.

[7] Boeing Document D6-13703, "*Boeing 747 Flight Manual*", December 30, 1969.

[8] Boeing Document D6-13645, "*747 IEFCS System Description*", April 03, 1968.

[9] Boeing Document D6-301-51-425, "*747 Operations Manual*", May 01, 1992.

[10] "*Flight control systems: practical issues in design and implementation*", Edited by Roger Pratt,Institution of Electrical Engineers, IEE Control Engineering Series, 2000.

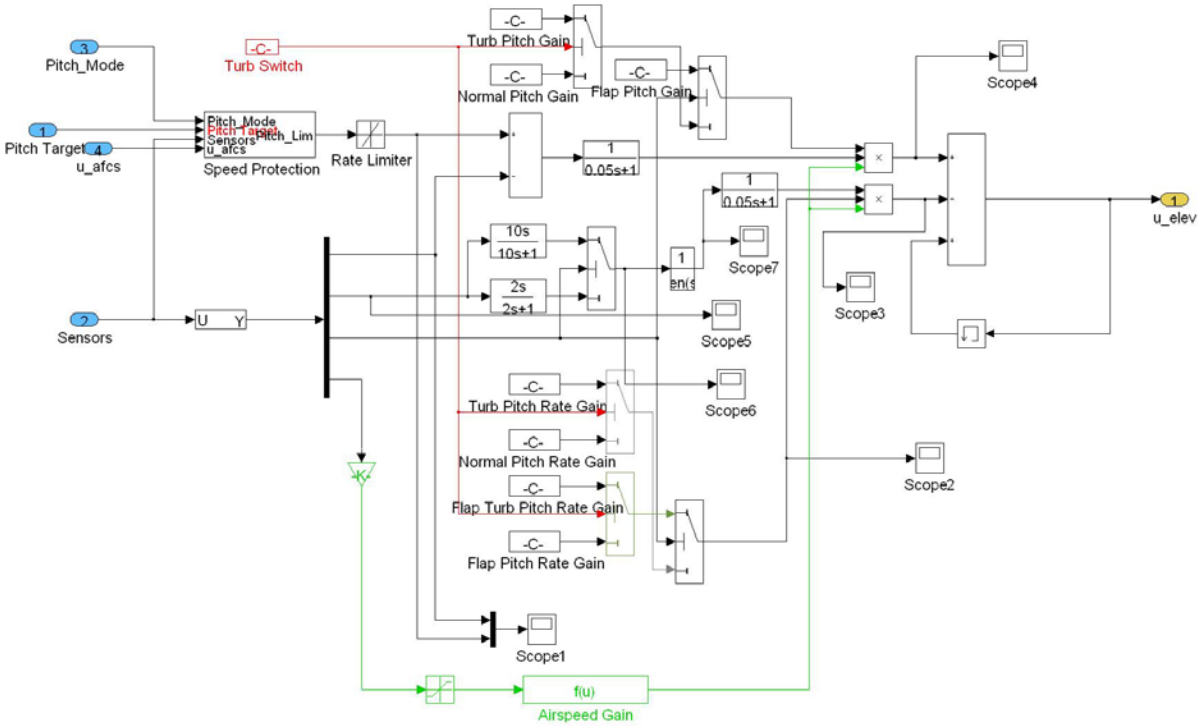

Fig. 7 - Main Pitch control loop

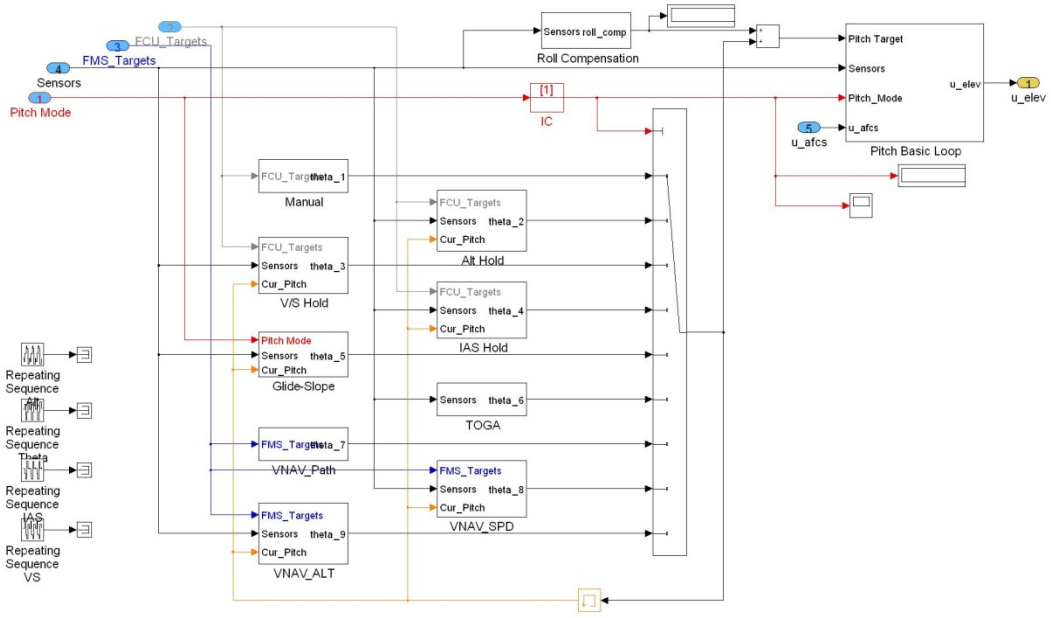

Fig. 8 - Pitch control modes

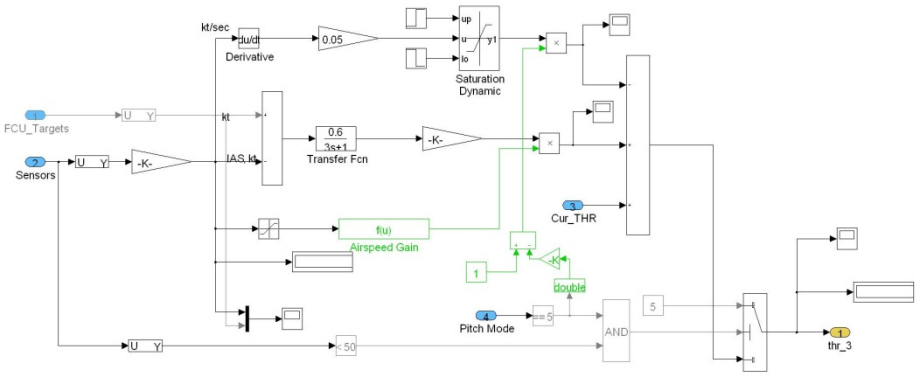

Fig. 9 - Speed hold control law

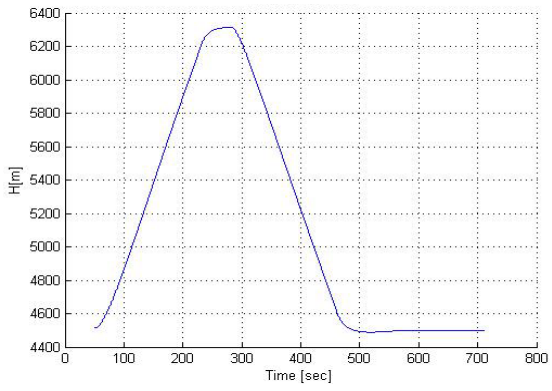

Fig. 10 - Altitude profile, test 2

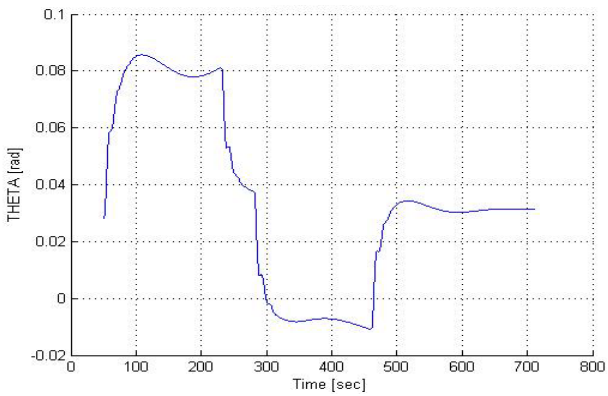

Fig. 11 - Pitch profile, test 2