POLITECNICO DI TORINO
Repository ISTITUZIONALE

Dynamic simulation of an electric stair-climbing wheelchair

Original
Dynamic simulation of an electric stair-climbing wheelchair / Quaglia, Giuseppe; Nisi, Matteo; Franco, Walter; Bruzzone, Luca. - In: INTERNATIONAL JOURNAL OF AUTOMATION TECHNOLOGY. - ISSN 1881-7629. - STAMPA. - 11:3(2017), pp. 472-480. [10.20965/ijat.2017.p0472]

Availability:
This version is available at: 11583/2674737 since: 2017-06-16T19:14:05Z

Publisher:
Fuji Technology Press

Published
DOI:10.20965/ijat.2017.p0472

Terms of use:

This article is made available under terms and conditions as specified in the corresponding bibliographic description in the repository

Publisher copyright

(Article begins on next page)

12 October 2024

Paper:

Dynamic Simulation of an Electric Stair-Climbing Wheelchair

Giuseppe Quaglia[*,†], **Matteo Nisi**[*], **Walter Franco**[*], **and Luca Bruzzone**[**]

[*]Politecnico di Torino
Corso Duca degli Abruzzi 24, 10129 Turin, Italy
[†]Corresponding author, E-mail: giuseppe.quaglia@polito.it
[**]University of Genoa, Via Opera Pia 15A, 16145 Genoa, Italy
[Received September 6, 2016; accepted October 17, 2016]

In this paper, a novel stair-climbing wheelchair is proposed. This new architecture represents an improvement over previous designs, in particular with regards to stability and safety during stair-climbing operations. The proposed mechanical architecture is hybrid: two locomotion units based on a "rotating leg" system are coupled with an idle track. This structure satisfies many design requirements: small dimensions, reduced weight, and a stable and regular climbing trajectory. In particular, the focus of this study is the design of an actuation system, the choice of suitable control logics, and the dynamic analysis of the proposed solution. The behavior of the wheelchair was tested through multibody simulation. The simulation results show that the proposed device can climb a staircase in a stable and safe manner. Certain smart dynamic features of the wheelchair were also proven. In particular, the efficacy of the cooperative actuation system and the effectiveness of the proposed control logic were analyzed. In conclusion, the simulation results demonstrate the appropriate operation of the proposed device, which will be used to design a working prototype of the stair-climbing wheelchair.

Keywords: wheelchair, stair-climbing, architectural barriers, Wheelchair.q

1. Introduction

The presence of architectural barriers in public and private buildings is a significant hindrance to the mobility of persons with disabilities or for people who, for one reason or another, use a wheelchair. The number of wheelchair users is significant. In [1], it was estimated that approximately 640,000 people in the U.K. (around 1% of the population) use a wheelchair. In [2], a French study determined that there were approximately 360,000 wheelchair users in France (0.64% of the population), while in the U.S. there are 3.6 million wheelchair users (1.5% of the population) [3]. European and U.S. data are consistent; thus, it can be concluded that approximately 1% of the population in developed countries use a wheelchair. This means that, assuming a population of 500 million in the European Union, the number of wheelchair users is approximately 5 million. Providing people with a device that can climb architectural barriers can significantly improve their quality of life.

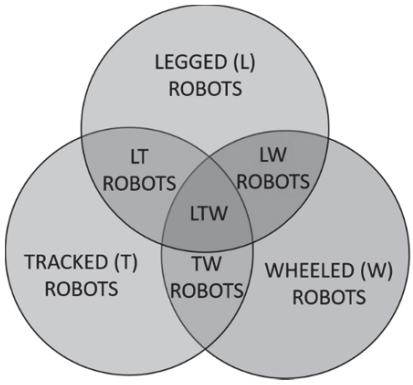

Fig. 1. Classification based on the locomotion system adopted to perform the obstacle climbing task.

Despite the existence of demand, commercially available stair-climbing wheelchairs remain uncommon. Moreover, few people use this kind of device because the complexity of proposed designs increase costs and reduce the autonomy of the wheelchair, in terms of movement capability and battery duration. In order to expand the distribution of stair-climbing wheelchairs, it is necessary to design a simpler and more effective device.

In the design process, the first step is to evaluate the different locomotion systems that can be used to perform an obstacle-climbing task. According to [4], three main typologies can be identified: legged locomotion, wheeled locomotion, and tracked locomotion (**Fig. 1**).

Wheeled locomotion, used in traditional electric wheelchairs and mobile robots [5, 6], guarantees high maneuverability and efficiency, thus allowing sufficient autonomy for movements on flat ground. However, the climbing ability of wheeled locomotion systems is limited to small obstacles. Improved climbing ability can be obtained with legged locomotion, which allows movements on highly irregular surfaces using a static or dynamic gait. However, legged locomotion requires complex control and actuation systems. Autonomy is also reduced even for motions on regular and flat ground. Finally, a third

possible solution is tracked locomotion, which guarantees good mobility on rough surfaces and obstacles. However, tracked locomotion systems are heavy, bulky, and consume a lot of energy.

It is evident that none of the proposed locomotion systems are suitable for developing a stair-climbing wheelchair that is simple, compact, lightweight, easy to use, and provides acceptable autonomy at a reasonable cost. For these reasons, hybrid locomotion systems, which combine the advantages of different mechanisms, could be a possible solution.

Track-wheel stair-climbing wheelchairs, one of the most common hybrid solutions, represent the state of the art for commercial products. Examples of this kind of architecture are presented in [7] and [8]. The effectiveness of tracks for stair climbing and the efficiency of wheels on flat ground are combined for improved device performance. Moreover, wheels guarantee good maneuverability, while tracks allow a stable and regular climbing movement. However, these devices usually require two actuation systems (for the wheels and for the tracks), and large dimensions and weight, which reduces their performance indoors. Other interesting solutions are hybrid leg-wheel architectures [9–12], which are usually smaller than tracked solutions and have great climbing capability. However, they require complex systems for sensors, actuation, and control. At the same time, their stair-climbing motion is less stable and regular.

Rotation leg architectures [13, 14] represent a particular family of legged mechanisms. This smart design reduces the complexity of mechanical and control systems, without decreasing climbing efficiency.

The authors have developed several versions of a stair-climbing wheelchair named "Wheelchair.q," all of which are based on a wheel-leg locomotion unit with a rotating leg climbing mechanism [15–19].

In this paper, the latest version of "Wheelchair.q," that uses a wheel-leg-track hybrid architecture is presented. It was created by coupling the rotating leg locomotion unit with an idle track. The design was based on the idea of combining the advantages of different locomotion systems (the efficiency of wheels, the climbing capability of legs, and the stability and regularity of tracks) while reducing the drawbacks associated with each solution.

First, the working principles and the wheelchair structure are illustrated. Then a multibody model, based on a simplified architecture, is described. The model is used to demonstrate the effectiveness of the proposed device and provides an understanding of the wheelchair's dynamic behavior. Finally, some interesting results that were obtained after the simulations are evaluated and future developments for the project are proposed.

2. "Wheelchair.q"

The main element of all the versions of "Wheelchair.q" is the leg-wheel locomotion unit represented in **Fig. 2**. It is constituted by a frame (labeled 1 in **Fig. 2**) with three legs. Each leg has a wheel (5) at its extremity; this wheel is rigidly connected to the planetary gear (4) of an epicyclical mechanism comprising the solar gear (2) and the planet carrier (1). The presence of an idle planet gear (3) allows gears (2) and (4) to have the same rotational direction. This feature is fundamental to the dynamic behavior of the device. This locomotion unit has two degrees of freedom: the rotation of the solar gear with respect to the planet carrier (described by the angular speed ω_S) and the rotation of the planet carrier with respect to the frame (described by the angular speed Ω). The presence of the epicyclical transmission determines the different values of the angular speed of the wheel (ω_W) during motion on a flat surface or during stair climbing.

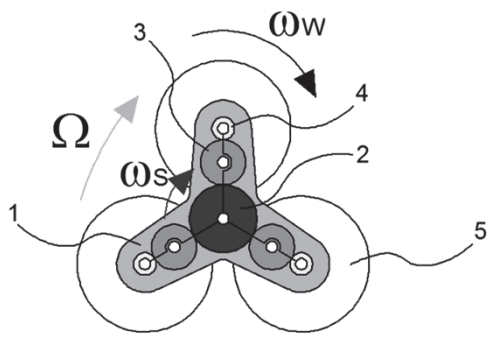

Fig. 2. Leg-wheel locomotion unit.

This architecture has been used as a locomotion unit in mobile robot applications by developing the Epi.q mobile robot family [20, 21]. In these cases, the particular structure of the locomotion unit was used to implement an automatic climbing feature. Indeed, the two degrees of freedom can be controlled dynamically by a just single motor connected to the solar gear. During movement on flat ground, the planet carrier rotation is blocked by the reaction forces between the wheels and the ground, thus the motor torque applied on the solar gear generates the advancing motion of the robot. When the rotation of the front wheel is blocked by the presence of an obstacle, the torque on the solar gear grows and the planet carrier rotates, allowing obstacle climbing. This smart solution is very interesting since it requires few actuators and neither sensors nor control to perform the obstacle climbing task.

However, it cannot be applied to the wheelchair for safety reasons. In fact, this behavior cannot be obtained for the descent phase, which would occur with the sequential uncontrolled drops of the wheels on the lower step, which is not acceptable for wheelchair applications. Therefore, a different architecture has been designed.

In **Figs. 3** and **4**, a solution for the actuation system is proposed. A third motor, which manages the rotation of both planet carriers, has been added in order to have complete controllability of the locomotion units even in the descent phase. The actuation system is characterized by two motors connected to the solar gears (labeled A in **Fig. 3**) and a third motor (C) mounted on a shaft (B) that connects both planet carriers through a transmis-

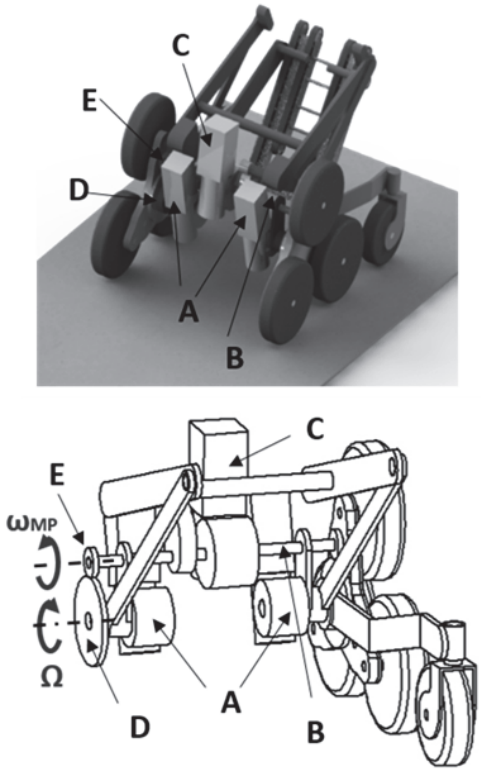

Fig. 3. Representation of the proposed actuation system.

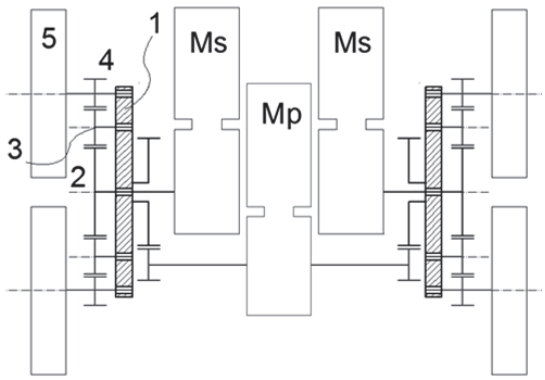

Fig. 4. Schematic view of the proposed actuation system.

sion system. This transmission system is constituted by the gears (D) and (E) that generate the transmission ratio $i_C = \omega_{MP}/\Omega = 3$, where ω_{MP} represents the angular speed of the planet carrier motor (C) and Ω indicates the angular speed of the locomotion unit planet carrier. Therefore, a rotation of shaft (B) corresponds to a third of rotation of planet carriers and consequently to single step climbing. This actuation system architecture allows complete control over the two locomotion units but loses the automatic climbing ability that is the characteristic feature of mobile robotics applications. However, owing to epicyclical transmission, the torques applied to the solar gears work with the planet carriers motor, reducing its effort and allowing the downsizing of the motors. The two locomotion units are the traction elements of the wheelchair. However, another foothold is necessary to obtain static stability with the vertical projection of the center of mass, which constantly lies within the support polygon.

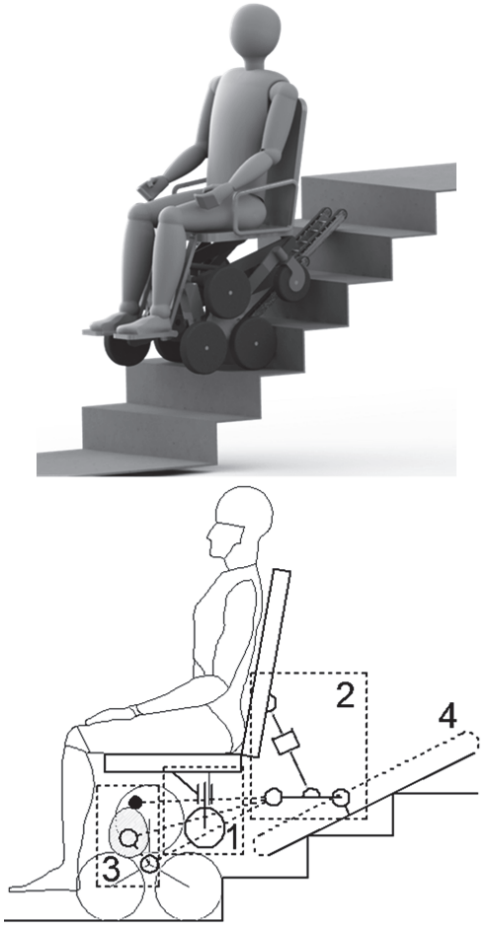

Fig. 5. Latest wheelchair architecture.

In **Fig. 5**, the complete wheelchair architecture is presented. The working principles and the detailed description of this new version are given in [22]; here only a brief overview is given.

During flat ground motion, the rear contact point is achieved by a couple of pivoting wheels (labeled 1 in **Fig. 5**). Before starting stair-climbing operations, the pivoting wheels must be lifted and a light idle track (4) is lowered and put into contact with the stair through an actuated mechanism (2). The use of an idle track provides the advantages of tracked locomotion (stability and regularity during stair climbing), because it touches at least two consecutive step edges, but with reduced dimensions and weight with respect to a pair of actuated tracks. Finally, the architecture is equipped with a cam mechanism (3) mounted between the frame and the seat to compensate for the oscillation generated by the locomotion unit and provide a straight trajectory for the user. Details about the design of the cam mechanism can be found in [22], but a brief description of its working principle will be given. The wheelchair frame (element PC in **Fig. 6**) is connected to the locomotion unit on the front (on point P) and to the

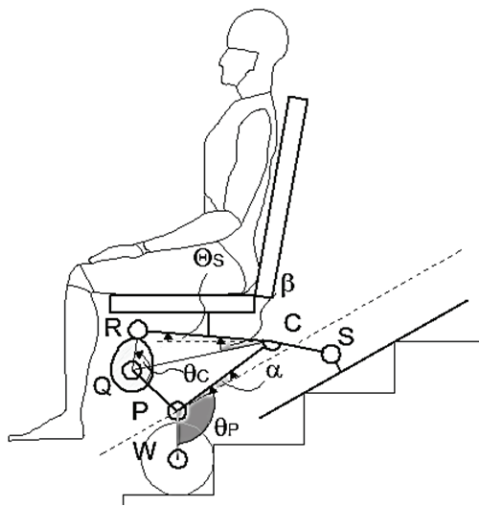

Fig. 6. Working principle of the cam mechanism.

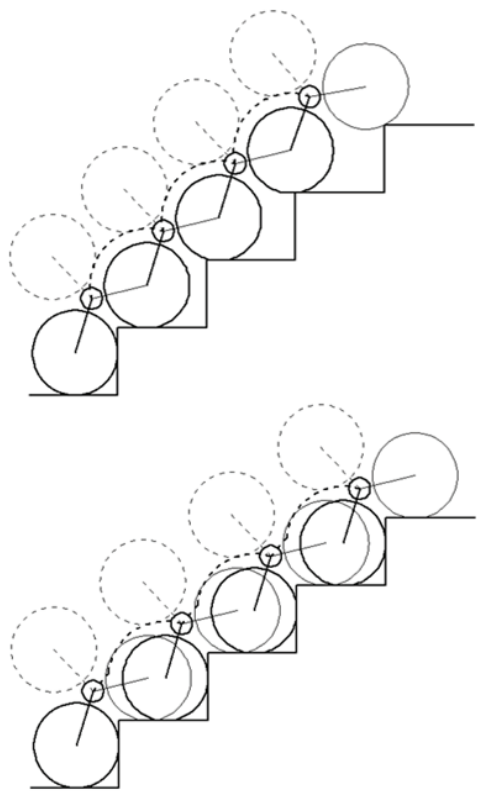

Fig. 7. Unstable (up) and stable (down) climbing sequences.

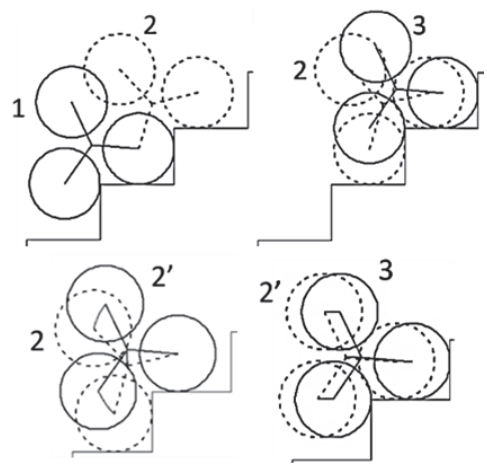

Fig. 8. Locomotion unit trajectory during a step climbing sequence.

idle track on the rear (on point S). The track moves on a straight trajectory while the point P moves on a circular trajectory during the rotation of the locomotion unit (represented by element PW) around the blocked wheel (point W). This behavior introduces oscillation ($\Delta\alpha$ in **Fig. 6**) on the wheelchair frame PC. The cam mechanism manages the angle β between the wheelchair frame (PC) and the seat (RC). The rotation of the cam with respect to the frame (θ_C) is coupled with the rotation of the planet carrier (θ_P) through the transmission system with the transmission ratio i_C =3 described above. The cam profile is designed such that variations in angle β due to cam rotation are equal and opposite to variations in angle α generated by the locomotion unit rotation. In conclusion, due to the cam mechanism, the orientation of the seat (represented by angle Θ_S) remains constant despite the oscillation of the wheelchair frame, and hence improving the user's comfort during stair-climbing.

Another important aspect of the proposed wheelchair architecture is the design of the algorithm that controls the motor positions during ascent and descent movements on the stairs. In the proposed solution, the planet carrier motor is position controlled, and continuous rotation at constant speed is imposed, generating the rotation of both locomotion units. The locomotion unit rotation defines the stair-climbing sequence but it is not enough to guarantee safe operating conditions. Indeed, if the wheels are blocked with respect to the planet carrier, after each step climbing the distance between the front wheels and the step rise increases until it reaches a critical value, and stable contact is no longer guaranteed (**Fig. 7**, up). For this reason, it is necessary to add torque control on the solar gear motors.

A constant torque applied on the solar gears allows the front wheel to get in touch with the step rise after each step climbing. With this approach, no gap is accumulated during stair climbing and the resulting climbing sequence is safer (**Fig. 7**, down). The resulting trajectory for the locomotion unit is thus the one described in **Fig. 8**. Until the front wheel is in contact with the step rise, the locomotion unit rotates around the blocked wheel that is kept in contact with the step rise by the torque applied on solar gear (from configuration 1 to 2 in **Fig. 8**). In contrast, when the front wheel is not in contact with the step rise, the torque on the solar gear causes the advance of the locomotion unit (2′ to 3). As the locomotion unit advances, the rotation imposed by the planet carrier motor continues (2 to 2′) and the resulting motion of these two effects is a roto-translation between configurations 2 and 3.

In conclusion, the designed control strategy (for both

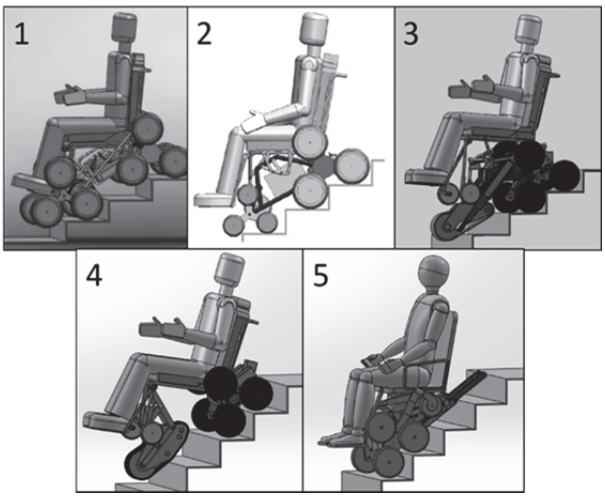

Fig. 9. Locomotion unit trajectory during a step climbing sequence.

ascent and descent phases) proposes a position control for the planet carrier motor and a torque control for the solar gear motors.

This architecture is suitable only for steady state conditions, meaning that both the locomotion units and the idle track are in full contact with the stair steps. In this condition, no external sensors are required to perform the climbing sequence. Different and more complex control and sensor systems should be designed to manage the transitory phases for the stair entrance and exit, but these will be discussed in future works.

In **Fig. 9**, a comparative representation of all the versions of "Wheelchair.q" is given. It is possible to understand the differences introduced in the new architecture (image 5). The subsequent paragraphs discuss the improvement of wheelchair performance.

3. Materials and Methods

In order to validate the designed architecture and the proposed control logic, a multibody model of the wheelchair was created in the MSC ADAMS environment as shown in **Fig. 10**. With this model, it was possible to understand the dynamic behavior of the wheelchair during stair-climbing, and to size the actuation system. In particular, the required motor torques and the contact forces between the wheelchair and the stair can be evaluated. Only the steady state condition was simulated. Thus, the model is a simplified version of the proposed wheelchair architecture, in which the unnecessary components (i.e., the pivoting wheels, their actuation system, and the reconfiguration mechanism connected to the track) were disregarded.

Simulations were performed using the control logic described in the previous section. A constant rotational speed of 30°/s was imposed on the planet carrier motor while a constant torque of 70 Nm was applied on each

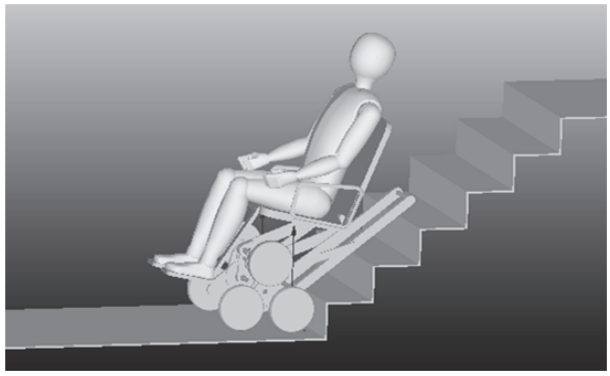

Fig. 10. Representation of the multibody model created in MSC ADAMS environment.

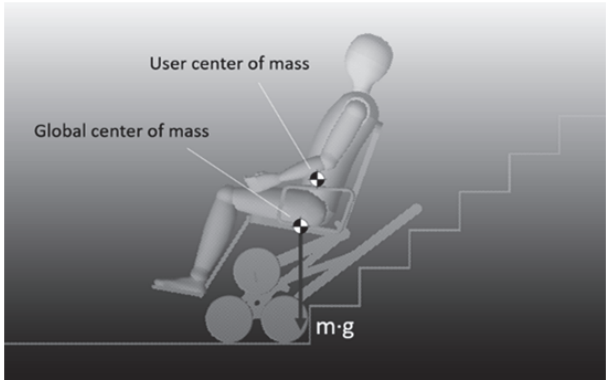

Fig. 11. Position of wheelchair center of mass.

solar motor. Realistic weights were considered for each component: the resulting total mass was approximately 185 kg; the total mass of the seat and user was 87 kg. The position of the center of mass according to this mass distribution is shown in **Fig. 11**.

In order to analyze the wheelchair behavior, free body diagrams of the wheelchair frame and the left and right locomotion units in a generic configuration were considered (**Figs. 12** and **13**).

The torque C_P represents the torque applied by the planet carrier motor, while the torque labeled $2C_S$ represents the contribution of both solar gear motors. Finally, Eq. (1) indicates some unrepresented relations between the forces applied to the structure.

$$\begin{cases} H_P = H_R + H_L \\ V_P = V_R + V_L \\ C_P = C_{PR} + C_{PL} \end{cases} \quad \ldots\ldots\ldots\ldots \quad (1)$$

4. Results

The simulation results show that the wheelchair worked properly and was able to climb a staircase in a safe and regular way. This paragraph presents some numerical results to highlight the following achievements obtained

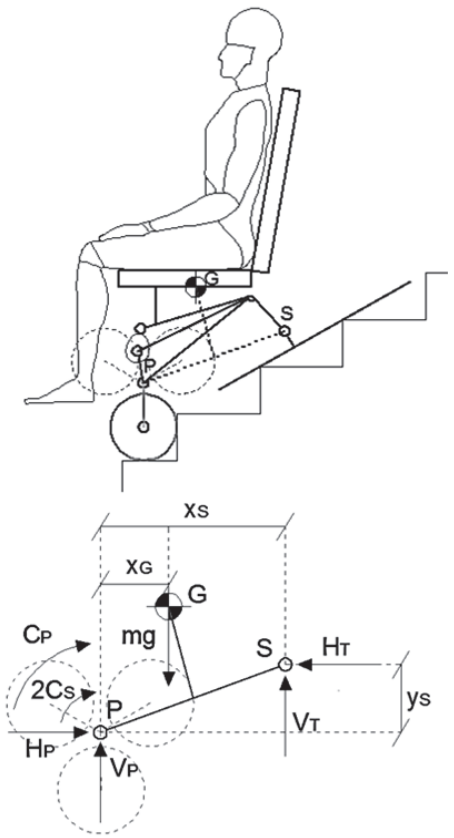

Fig. 12. Free body diagram of the wheelchair frame on stair.

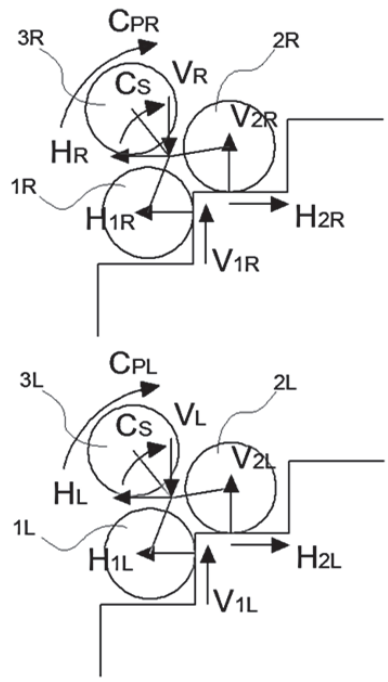

Fig. 13. Free body diagrams of left and right locomotion units.

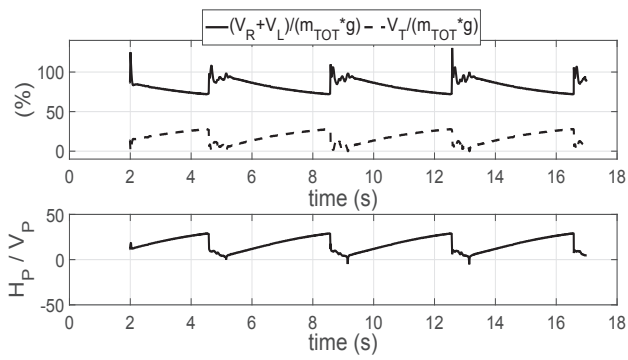

Fig. 14. Ratios between the vertical forces acting on the wheelchair during stair-climbing and the total wheelchair weight.

with this new version of "Wheelchair.q":

1. the improved stability of the device on stairs;
2. the effectiveness of the cooperative actuation system;
3. the functionality of the proposed control logic.

The first advantage of this novel architecture is the improvement of static stability during stair-climbing operations, which is necessary to satisfy the requirements stated in ISO 7176-28:2012, "Requirements and test methods for stair-climbing devices." According to the proposed standard, the wheelchair is deemed stable if it can maintain any working configuration without slip, even if the staircase is tilted forward. Basically, the friction forces between the locomotion unit wheels and the stair should contrast the horizontal force due to the contact between the stair and the idle track (H_T). To verify this condition, it was necessary to analyze how the wheelchair weight was split between the front and rear contact points. Compared to previous versions, the choice of positioning the idle track on the rear allowed more weight to be carried on the locomotion units, which were actuated, and the unloading of the track, which was idle. This feature improved the stability of the wheelchair, preventing slippage. In **Fig. 14**, some results on load distributions are presented. The two locomotion units were equally loaded due to the symmetric structure of the wheelchair. The percentage of global wheelchair weight carried by the locomotion units was approximately 80% while the other 20% was carried by the track. This condition was sufficient to guarantee device static stability. **Fig. 14** also shows the value of the ratio (H_P/V_P) between the horizontal and the vertical forces that the two locomotion units exchanged globally with the stair. The value obtained (approximately 0.2) ensured that no slippage occurred in any configuration considering a standard friction coefficient between the wheel and the stair (approximately 0.6).

Another interesting result obtained with this architecture was the cooperative operation of the three motors that comprise the actuation system. In **Fig. 15**, the trend of the torque applied by the planet carriers motor is represented. It can be observed that the values oscillated between positive and negative because in order to obtain constant rotational speed, the sign of the motor torque was changed depending on the configuration of the locomotion unit during step climbing. In particular, during rotation there was

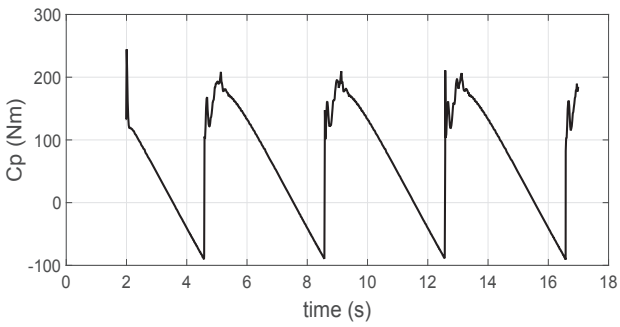

Fig. 15. Torque applied by the planet carriers motor.

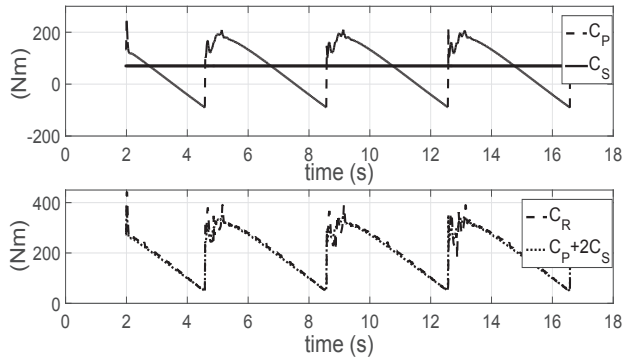

Fig. 16. Components of the wheelchair frame rotational equilibrium.

a descending phase of the locomotion unit center towards the next step that required the application of a negative torque on the planet carrier.

In **Fig. 16**, the numerical results relative to the forces that contribute to the wheelchair frame rotational equilibrium are presented (see the free body diagram of **Fig. 12**). **Fig. 16** shows that the resistant torque (C_R) was balanced by the contribution of all three motors. This allowed the downsizing of the planet carrier motor and the exploitation of all the actuators installed, even during the stair-climbing operation.

Moreover, the simulation highlighted the effectiveness of the cam mechanism in improving user comfort during stair-climbing. In **Figs. 17** and **18**, the trajectory, speed, and acceleration of the user center of mass (CM) are presented. **Fig. 17** shows that the user center of mass moved in an almost straight trajectory despite the trajectory of the planet carrier center (P). The cam mechanism allowed a speed for the user center of mass that was nearly constant both in value and in direction, thus improving the regularity of the user movement. Finally, **Fig. 18** shows that accelerations were nearly zero except when the wheels hurt the step treads.

The final results of the multibody simulations come from the analysis of the working principle of the proposed control logic. **Fig. 19** shows the angular velocity and rotation angle of the locomotion unit wheels. With a constant torque applied on the solar gear of the epicyclical mechanism, the wheels maintained contact with the step rises,

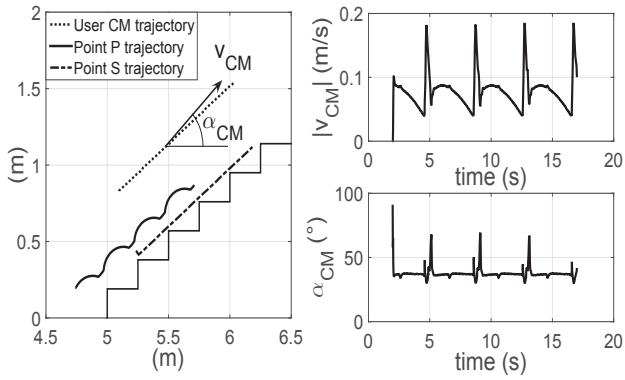

Fig. 17. Trajectory and velocity of the user center of mass.

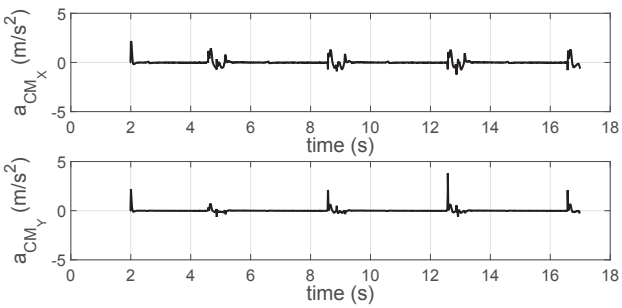

Fig. 18. Acceleration of the user center of mass.

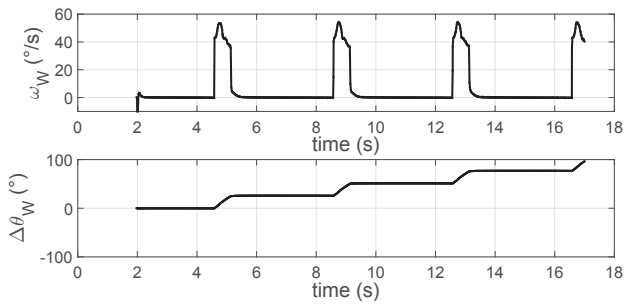

Fig. 19. Angular velocity and rotation angle of the locomotion unit wheels.

and no rotation occurred due to friction forces. When contact was lost due to planet carrier rotation, the torque applied on the solar gear brought the front wheels into contact with the next step rise. The peaks in the wheel angular velocity graph represent the advancing phases during the stair-climbing sequence.

5. Conclusions

In this paper, a novel architecture for a stair-climbing wheelchair was proposed. In particular, the actuation system and the control logic were presented and discussed. Compared to the previous versions, the static stability and regularity of the trajectory during stair-climbing operation were improved. The proposed working principles were tested using multibody simulations in the MSC

Fig. 20. Representation of a possible prototype for the proposed wheelchair.

ADAMS environment. The simulation results show that the proposed device worked properly and some relevant numerical results were presented. The three motors of the actuation system worked in a cooperative way to perform the ascending and descending movements on the stairs. This solution allowed the downsizing of the motors and optimization of the overall performance. Finally, the effectiveness of the control logic implemented in the model was confirmed and a safe and regular climbing sequence was obtained through a combination of position and torque control.

The simulation results will be used to design a prototype for the wheelchair (see **Fig. 20**). It will be necessary to test and to demonstrate the effectiveness of the proposed device. Besides the mechanical architecture presented in this paper, a sensing and control system, similar to the one presented in [23], should be designed to enable the wheelchair to detect stairs and obstacles. An experimental activity will be conducted on the prototype to evaluate the relevant features of this architecture and to perform a quantitative comparison with other stair-climbing wheelchairs.

References:

[1] B. Sapey, J. Stewart, and G. Donaldson, "The social implications of increases in wheelchair use," Lancaster University, Lancaster, UK, 2004.

[2] N. Vignier, J. F. Ravaud, M. Winance, F. X. Lepoutre, and I. Ville, "Demographics of wheelchair users in France: results of national community-based handicaps-incapacites-dependance surveys," J. of rehabilitation medicine, Vol.40, No.3, 231-239, 2008.

[3] U.S Census Bureau, "Americans with Disabilities: 2010," 2012.

[4] L. Bruzzone and G. Quaglia, "Review article: locomotion systems for ground mobile robots in unstructured environments," Mechanical Sciences, Vol.3, pp. 49-62, 2012.

[5] T. He, M. Bando, M. Guarnieri, and S. Hirose, "The Development of an Autonomous Robot System for Patrolling in Multi-Floor Structured Environment," Int. J. of Automation Technology, Vol.6, No.1, pp. 13-21, 2012.

[6] J. Han, X. Li, and Q. Qin, "Design of Two-Wheeled Self-Balancing Robot Based on Sensor Fusion Algorithm," Int. J. of Automation Technology, Vol.8, No.2, pp. 216-221, 2014.

[7] S. Yu, T. Wang, Y. Wang, D. Zhi, C. Yao, X. Li, and Z. Wang, "A tip-over and slippage stability criterion for stair-climbing of a wheelchair robot with variable geometry single tracked mechanism," Proc. of Int. Conf. on Information and Automation (ICIA), pp. 88-93, 2012.

[8] R. T. Quigg, "Stair-climbing wheelchair," U.S. Patent No.6, 857, 490, Feb. 22, 2005.

[9] M. J. Lawn and T. Ishimatsu, "Modeling of a stair-climbing wheelchair mechanism with high single step capability," Neural Systems and Rehabilitation Engineering, Vol.11, No.3, pp. 323-332, 2003.

[10] R. Morales, V. Feliu, A. Gonzalez, and P. Pintado, "Coordinated motion of a new staircase climbing wheelchair with increased passenger comfort," Proc. of Int. Conf. on Robotics and Automation (ICRA), Orlando, Florida, USA, pp. 3995-4001, 2006.

[11] R. Morales, V. Feliu, and A. González, "Optimized obstacle avoidance trajectory generation for a reconfigurable staircase climbing wheelchair," Robotics and Autonomous Systems, Vol.58, No.1, pp. 97-114, 2010.

[12] J. Yuan and S. Hirose, "Zero Carrier: A Novel Eight Leg-Wheels Hybrid Stair Climbing," J. of Robotics and Mechatronics, Vol.17, No.1, 44-51, 2005.

[13] G. Quaglia, D. Maffiodo, W. Franco, S. Appendino, and R. Oderio, "The Epi. q-1 hybrid mobile robot," The Int. J. of Robotics Research, Vol.29, No.1, pp. 81-91, 2009.

[14] U. Saranli, M. Buehler, and D. E. Koditschek, "RHex: A Simple and Highly Mobile Hexapod Robot," The Int. J. of Robotics Research, Vol.20, No.7, pp. 616-631, 2001.

[15] G. Quaglia, W. Franco, and R. Oderio, "Wheelchair. q, a mechanical concept for a stair climbing wheelchair," Proc. of Int. Conf. on Robotics and Biomimetics (ROBIO), Guilin, China, pp. 800-805, 2009.

[16] G. Quaglia, W. Franco, and R. Oderio, "Wheelchair. q, a motorized wheelchair with stair climbing ability," Mechanism and Machine Theory, Vol.46, No.11, pp. 1601-1609, 2011.

[17] G. Quaglia, W. Franco, and M. Nisi, "Design of a Reconfiguration Mechanism for an electric Stair-climbing Wheelchair," Proc. of the Int. Mechanical Engineering Congress & Exposition (IMECE), Montreal, Quebec, Canada, 2014.

[18] G. Quaglia, W. Franco, and M. Nisi, "Evolution of Wheelchair. q, a Stair-climbing Wheelchair," Proc. of the 14th World Congress in Mechanism and Machine Science, Taipei, Taiwan, 2015.

[19] G. Quaglia, W. Franco, and M. Nisi, "Analysis of the Static Stability for an Electric Stair-Climbing Wheelchair," Proc. of the Int. Conf. on Robotics in Alpe-Adria-Danube Region (RAAD), Belgrade, Serbia, 2016.

[20] G. Quaglia, L. Bruzzone, R. Oderio, and R. Razzoli, "Epi.q Mobile robots family," Proc. of the ASME 2011 Int. Mechanical Engineering Congress & Exposition, Denver, Colorado, 11-17 November 2011.

[21] G. Quaglia, R. Oderio, L. Bruzzone, and R. Razzoli, "A modular approach for a family of ground mobile robots," Int. J. of Advanced Robotic Systems, Vol.10, 2013.

[22] G. Quaglia and M. Nisi, "Design and Optimization of a Self-Leveling Cam Mechanism for a Stair Climbing Wheelchair," unpublished.

[23] K. Kato, H. Seki, and M. Hikizu, "3-D Obstacle Detection Using Laser Range Finder with Polygonal Mirror for Powered Wheelchair," Int. J. of Automation Technology, Vol.9, No.4, pp. 373-380, 2015.

Name:
Giuseppe Quaglia

Affiliation:
Associate Professor, Politecnico di Torino

Address:
Corso Duca degli Abruzzi 24, 10129 Torino, Italy

Brief Biographical History:
1989 Received Master degree in Mechanical Engineering from Politecnico di Torino
1993 Received Ph.D. in Applied Mechanics, Mechanical System and Structures
1994- Researcher and then Professor, Politecnico di Torino

Main Works:
• G. Quaglia and M. Sorli, "Air Suspension Dimensionless Analysis and Design Procedure," Vehicle System Dynamics, Vol.35, No.6, pp. 443-475, 2001.
• G. Quaglia, D. Maffiodo, and F. Pescarmona, "A Novel Continuous Alternate Motion Mechanism With Two Input Wheels," J. of Mechanical Design, Vol.129 pp. 858-864, 2007.
• Robotics, mechatronics, systems dynamic, mechanisms, industrial automation and technologies for sustainable human development

Membership in Academic Societies:
• International Federation for the Promotion of Mechanism and Machine Science (IFToMM)
• The American Society of Mechanical Engineering (ASME)

Name:
Matteo Nisi

Affiliation:
Ph.D. Student, Politecnico di Torino

Address:
Corso Duca degli Abruzzi 24, 10129 Torino, Italy

Brief Biographical History:
2013 Received Master degree in Mechanical Engineering, Politecnico di Torino
2013- Ph.D. Student, Mechanical and Aerospace Engineering Department, Politecnico di Torino

Main Works:
• G. Quaglia, W. Franco, and M. Nisi, "Design of a Reconfiguration Mechanism for an electric Stair-climbing Wheelchair," Proc. of the Int. Mechanical Engineering Congress & Exposition (IMECE), Montreal, Quebec, Canada, 2014.
• G. Quaglia, W. Franco, and M. Nisi, "Evolution of Wheelchair. q, a Stair-climbing Wheelchair," Proc. of the 14th World Congress in Mechanism and Machine Science, Taipei, Taiwan, 2005.
• G. Quaglia and M. Nisi, "Design and construction of a new version of the Epi.q UGV for monitoring and surveillance tasks," Proc. of the Int. Mechanical Engineering Congress & Exposition (IMECE), Houston, Texas, 2015.

Name:
Walter Franco

Affiliation:
Assistant Professor, Politecnico di Torino

Address:
Corso Duca degli Abruzzi 24, 10129 Torino, Italy

Brief Biographical History:
1999 Received Ph.D. in Applied Mechanics, Politecnico di Torino
2001- Assistant Professor, Mechanical and Aerospace Engineering Department, Politecnico di Torino

Main Works:
• "Human powered press for producing straw bales for use in construction during post-emergency conditions," Biosystems Engineering, Vol.150, pp. 170-181, 2016.
• "Wheelchair.q, a mechanical concept for a stair climbing wheelchair," ROBIO 2009, Guilin, China, December 19-23, pp. 800-805, 2009.
• "Flexible Pneumatic Actuators: a comparison between the McKibben and the straight fibres muscle," J. of Robotics and Mechatronics, Vol.13, pp. 56-63, 2001.

Membership in Academic Societies:
• International Federation for the Promotion of Mechanism and Machine Science (IFToMM)

Name:
Luca Bruzzone

Affiliation:
Assistant Professor, DIME Department, University of Genoa

Address:
Via Opera Pia 15A, 16145 Genova (GE), Italy

Brief Biographical History:
1997 Received Master degree in Mechanical Engineering from the University of Genoa
1999 Assistant Professor, Mechanics of Machinery, the University of Genoa

Main Works:
• L. Bruzzone and G. Quaglia, "Review article: locomotion systems for ground mobile robots in unstructured environments," Mechanical Sciences, Vol.3, No.2, pp. 49-62, 2012.
• G. Quaglia, L. Bruzzone, G. Bozzini, R. Oderio, and R. P. Razzoli, "Epi.q-TG: mobile robot for surveillance," Industrial Robot: An Int. J., Vol.38, No.3, pp. 282-291, 2011.
• Mechanics and control of robots and automation devices

Membership in Academic Societies:
• International Federation for the Promotion of Mechanism and Machine Science (IFToMM) Italy