POLITECNICO DI TORINO
Repository ISTITUZIONALE

Optimization of Reflective FDMA-PON Architecture to Achieve 32 Gb/s Per Upstream Wavelength Over 31 dB ODN Loss

Original
Optimization of Reflective FDMA-PON Architecture to Achieve 32 Gb/s Per Upstream Wavelength Over 31 dB ODN Loss / Straullu, Stefano; Paolo, Savio; CHANG LEONG, JOANA CAROLINA; Ferrero, Valter; Nespola, Antonino; Gaudino, Roberto; Silivo, Abrate. - In: JOURNAL OF LIGHTWAVE TECHNOLOGY. - ISSN 0733-8724. - 33:(2015), pp. 474-480. [10.1109/JLT.2015.2389871]

Availability:
This version is available at: 11583/2605007 since:

Publisher:
IEEE - INST ELECTRICAL ELECTRONICS ENGINEERS INC

Published
DOI:10.1109/JLT.2015.2389871

Terms of use:

This article is made available under terms and conditions as specified in the corresponding bibliographic description in the repository

Publisher copyright
IEEE postprint/Author's Accepted Manuscript

©2015 IEEE. Personal use of this material is permitted. Permission from IEEE must be obtained for all other uses, in any current or future media, including reprinting/republishing this material for advertising or promotional purposes, creating new collecting works, for resale or lists, or reuse of any copyrighted component of this work in other works.

(Article begins on next page)

12 October 2024

Optimization of Reflective FDMA-PON Architecture to Achieve 32 Gbps per Upstream Wavelength over 31 dB ODN Loss

S. Straullu, P. Savio, J. Chang, V. Ferrero, A. Nespola, R. Gaudino and S. Abrate

***Abstract*—In the framework of the EU-funded research project "FABULOUS" we experimentally demonstrate an innovative FDMA-PON architecture whose upstream transmission is based on a reflective Mach-Zehnder modulator. By a careful optimization of electrical spectrum allocation, semiconductor optical amplifier biasing point and modulation index, we upgrade previous results over similar architectures, significantly increasing the achievable optical distribution network loss. We demonstrate an overall upstream capacity of 32 Gbps per wavelength over 37 km of installed fiber and 31 dB loss.**

***Index Terms*— Passive Optical Network, FDMA, Reflective Mach Zehnder modulator, Self-coherent detection.**

I. Introduction

The high per-user speed and the flexibility are the key features for the near future passive optical access networks (PON). Is ITU-T G.989 NG-PON2 [1], and in particular its TWDM-PON part, the ultimate answer to such demands? We believe that the relatively non-ambitious performances foreseen by such standard (such as the relatively low capacity per wavelength) and the lack, for the moment, of some required components for allowing massive deployment (such as very cheap tunable ONU lasers) still leave space for research groups to seek different technological solutions.

Anyway, a lesson learned from ITU-T G.989 is that most telecom operators require a backward compatibility with already existing PON structures, and thus future standards should be capable of working on pure splitter-based PON, and consequently must satisfy the very demanding ITU-T requirements in terms of Optical Distribution Network (ODN) loss without any optical amplification along the path. In fact, we believe that any research study in this area should have, as one of the figure of merit to be investigated, the possibility to reach very high ODN loss, such as the 31 dB or even more requested by the highest ITU-T PON classes [2]).

This work was supported by EU FP7 Project FABULOUS under contract n. 318704.

S. Straullu, P. Savio, A. Nespola, and S. Abrate are with Istituto Superiore Mario Boella, 10138 Torino, Italy (e-mail: straullu@ismb.it).

J. Chang, V. Ferrero and R. Gaudino are with Politecnico di Torino, Dipartimento di Elettronica e Telecomunicazioni, 10129 Torino, Italy (e-mail: gaudino@polito.it).

In order to propose new solutions for this scenario, the FABULOUS European Project [3] investigates on a PON approach based on Frequency Division Multiplexing/Multiple Access (FDM/FDMA), where each Optical Network Unit (ONU) is assigned a portion of the available electrical spectrum using electrical subcarrier modulation (in both directions). The project main innovation resides in the upstream (US) direction, in which a proper use of a Reflective Mach-Zehnder Modulator (R-MZM, described in details in [4]) allows:

- laser-less operation, thanks to a reflective approach that modulated and reflects back continuous-wave (CW) wavelengths generated at the central office (CO), thus solving the requirement of tunable laser at the ONU;
- advanced modulation format to perform an high spectral efficiency M-QAM modulation format over each electrical subcarrier, thus allowing a spectral efficiency higher than the traditional 1 bit/s/Hz (approx.) of the traditional OOK approach (we show electrical spectral efficiency about 3 bit/s/Hz);
- an advantageous polarization handling, as it will be further described later;
- possibility to integrate the ONU in a low-cost silicon-photonics platform (as investigated in the component part of the project [4], not reported here for space limitations).

The basic features of the FDMA-PON architecture proposed in our project were already studied in previous papers, such as in [5]-[7]. In particular, an important performance benchmark was already shown in [7], where an upstream capacity per wavelength of the order of 20 Gbps was demonstrated. This result was obtained by one of the project partners over a realistic test bed that introduced statistic ODN loss values taken from installed PON networks of a major European telecom operator, which have a mean value around 21 dB, as reported in [7].

In this paper we upgrade these results, obtaining an US capacity of up to 32 Gbps per optical carrier over more than 31 dB ODN loss and 37 km of installed fiber. Compared to the previous work [7], the most significant improvement is in terms of increased ODN loss, that is now compliant with ITU-T class N2, as defined in the XG-PON standard [2] (up to 40 km and 31 dB ODN loss). This upgrade was only made possible by optimizing several parameters, such as optimal

electrical spectrum allocation, modulation index and semiconductor optical amplifier (SOA) biasing point.

We believe that this new paper properly complements the previous work [7] since:

- in [7] a very practical and adaptive approach was applied, that allows to tailor the transmission parameter (such as the bit rate and the emitted power) to an actual ODN loss statistical distribution;
- in this paper, we followed an ITU-T oriented approach, that requires worst-case conditions in terms of ODN loss, requiring that all ONUs work at the maximum ODN loss value and at the same reference bit rate, which we set at 1 Gbps per user.

The paper is a broad extension of our preliminary work previously published in [10] and is organized as follows: in Sect. II we give a general overview of the FABULOUS architecture, in Sect. III we discuss the main system electrical parameters and their optimization; the experimental setup and measurement are described in Sect. IV, while some conclusions are drawn in Sect. V.

II. The FABULOUS Architecture

The FABULOUS architecture [5] foresees two hierarchical multiplexing level: wavelength division multiplexing (WDM), then FDM/FDMA (FDM for the downstream, FDMA for the upstream) at the electrical level, using electrical subcarrier modulation over each wavelength. The electrical FDMA approach provides several advantages compared to the more traditional TDMA-PON approach, and in particular:

- electronic simplification at the ONU side: while TDMA requires all ONU and OLT transceiver to work at the full bit rate per wavelength, FDMA allows the ONU to handle only its dedicated electrical spectrum slice, and then to run at the single-user baud rate, thus providing costs and power consumption savings particularly for aggregated bit rate above 10 Gbps;
- the proposed transmission approach has a good electrical spectral efficiency (thanks to the use of M-QAM), at least three times higher than what is given by OOK employed in ITU-T TDMA-PON, thus allowing a much greater bit rate per wavelength. As we will discuss in Sect. V, this feature also allows to envision a single wavelength per direction approach for medium term scenario, rather than moving to much more costly WDM solutions;
- intrinsic flexibility: FDMA networks can adapt the bit rate to the channel characteristics and to the user requirements, varying the spectrum portion or the modulation format that every sub-carrier employs. Such flexibility is a key enabling factor for future networks and its performances, and was studied in details in [7] and [8]. Anyway, for the reasons explained at the end of the Introduction section, in the present paper we do not further investigate on dynamic allocation, in order to focus only on maximum ODN loss and aggregated upstream capacity.

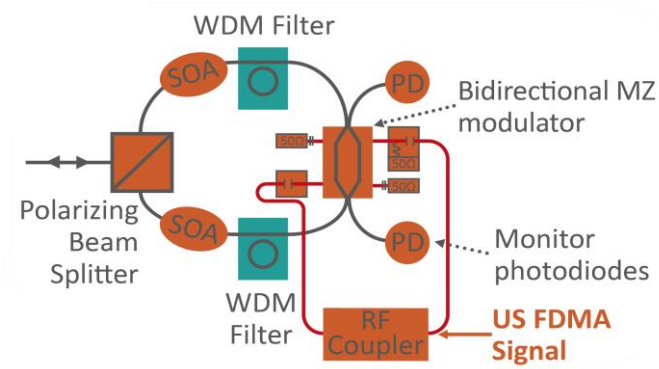

Fig. 1: The "FABULOUS" FDMA-PON ONU block-scheme for upstream reflective modulation in the version suitable for integration in a silicon-photonics platform [4].

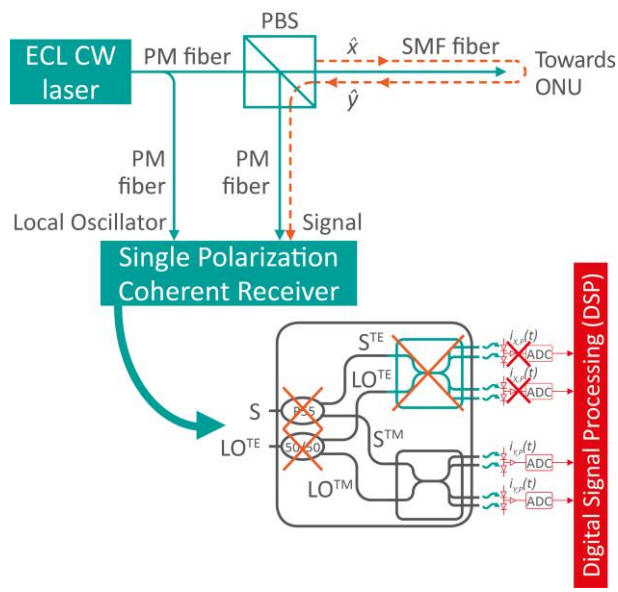

Fig. 2: The "FABULOUS" FDMA-PON OLT structure, performing single-polarization homodyne coherent detection. For simplicity, only the components for upstream detection and single wavelength use are represented. In the lower part of the figure, we show for comparison a classical dual polarization coherent receiver, crossing all the subcomponents that we can avoid thanks to single polarization detection.

The ONU schematic is depicted in Fig. 1 and is based on a R-MZM structure described in detail in [4] and [9]. In brief, this ONU structure allows:

- reflective modulation over a generic subcarrier modulation frequency (which must be inside the electrical passband of the MZM), applying the same passband signal (an RF 16-QAM in our case) on both arms of the R-MZM;
- optical amplification, using two SOAs on both arms of the loop;
- wavelength tunability, using two tunable filters on both arms of the loop to select the desired wavelength among the set of CW seed wavelengths generated at the OLT;
- when the two MZM branches are perfectly symmetrical

and the MZM electrodes work in travelling wave mode, the device turns out to be independent on the input polarization and implements a 90° polarization rotation in reflection, as described in details in [9], where it is also demonstrated that this polarization rotation is preserved along the whole US path, thus allowing a simplified single polarization homodyne coherent detection for the Optical Line Terminal (OLT) side at the Central Office (CO);

- the whole ONU in Fig. 1, apart from the input polarizing beam splitter, requires internally handling only one polarization, which can be made coincident with the TE-mode of the used waveguides. This is a key advantage for any photonic platform. In particular, inside the FABULOUS project, we are working on integrating it on a silicon photonics platform [4], with hybrid InP-over-silicon SOA (in order to derive the correct component specifications and to assess the global system performances, the experiments described in the following have anyway been realized with discrete components).

The OLT schematic is depicted in Fig. 2. It is based on a coherent optical receiver over the full electrical spectrum generated by all ONUs. In our specific setup, the OLT digital signal processor (DSP) coherently receives all M-QAM modulations over all the ONUs subcarrier frequencies, then receives them separately after a bank of DSP bandpass filters and M-QAM demodulators. Thanks to the aforementioned polarization features, all ONU signals are received on a polarization that is orthogonal to the transmitted CW seed so that a single polarization self-coherent receiver is sufficient, greatly simplifying the receiver structure and (just like for the ONU) allowing a much easier integration on a silicon photonic platform. Moreover, we can implement a self-coherent approach, so that there is no frequency offset to be recovered.

III. Main Electrical System Parameters Used in Our Experimental Demonstrator

As mentioned in the introduction, in this paper we target a fixed bit rate per upstream ONU transmission. In particular, we set a 1 Gbps (net) capacity per user and 32 ONUs per wavelength. Our "figure of merit" was the maximum achievable ODN loss (equal for all ONUs) that still gives an acceptable pre-FEC BER at the OLT receiver. To achieve this goal we optimize the following parameters:

- spectrally efficient modulation format for each electrical subcarrier. We selected 16-QAM with raised-cosine spectral shaping, since it turned out to be the best compromise among performances, complexity and bandwidth requirements. In particular, the resulting baud rate below 300 Mbaud allows the DSP at the ONU side, and particularly the required Digital-to-Analog (DAC) (for the US generation) and Analog-to-Digital (ADC) converters (for DS detection), to run at a speed of the order of 600 MSample/s, compatible with the today commercial Field Programmable Gate Array (FPGA) platforms and lower-cost CMOS DAC and ADC. We believe that this option for "sub-band" processing is fundamental to reduce complexity at the ONU side
- optimized band plan for the electrical subcarrier in terms of both frequency spacing and absolute positioning of the FDMA electrical comb;
- optimized modulation index over each R-MZM dual electrode;
- optimized SOA biasing point for each ODN loss.

In the following of this Section we give some further comments on each of these optimizations. For what concerns band plan optimization, we start by observing that the R-MZM must work in travelling wave mode, as described in [4] and [9], which in turns requires working approximately above 1 GHz (for lower frequency, the MZM electrodes appears as lumped electrical elements so that the travelling wave effect is lost). The available bandwidth thus ranges approximately from 1 GHz to the MZM intrinsic high frequency band, which is about 12 GHz in the discrete components used in our experiments. To efficiently use this approximately 11 GHz available bandwidth, we used an aggressive electrical spectral shaping technique (square root raised cosine filtering with roll-off 0.1 in the 16-QAM modulation) to significantly reduce the bandwidth per ONU and to pack as many ONUs as possible in the available electrical modulation frequency range. Targeting 1 Gbps net bit rate per user and 20% Forward Error Correction (FEC) overhead, every FDM electrical carrier using 16-QAM should carry 300 Mbaud, and thus an electrical spectrum slice equal to at least $B_{RF}=330\ MHz$, thus allowing 32 ONUs on each wavelength over the available 11 GHz R-MZM band. We will show in the next section that a spectral separation among subcarrier exactly equal to B_{RF} is sufficient to avoid system penalty.

Another very important system optimization we performed is related to second and third harmonic nonlinearity in the R-MZM, which are proportional to the electrical signal amplitude over the R-MZM electrodes. Defining the modulation index m_{index} as the ratio between the modulated electrical peak voltage (i.e. the amplitude of the RF M-QAM electrical signal) and the modulator V_π, we performed an extensive analysis to optimize it in terms of maximum reachable ODN loss. Under our target upstream transmission conditions, the modulation index must be in the range $0.15 \le m_{index} \le 0.25$. This optimal range finds a balance between two counteracting effects: for increasing modulation indexes, the useful modulated optical signal increases (which is advantageous at the OLT receiver), but also the second and third harmonic components grow, generating detrimental interference with other subcarrier. On the contrary, for low modulation indexes the nonlinearities are negligible but at the same time the useful signal is smaller.

On top of modulation indexes optimization, we also found a proper FDMA frequency allocation to further reduce the effects of nonlinearities, imposing that the second harmonic of each sub-carrier frequency falls exactly in between two adjacent other higher frequency sub-carriers. Since this idea gives a non-negligible performance advantage at basically no cost, we give some more insight about it. Let $f_i = f_0 + i\Delta_f$ be the *i-th* ONU sub-carrier central frequency ($i = [0: N_{ch} - 1]$),

$\Delta_f = B_{RF}$ the channel separation (corresponding to null spectral guard-bands among adjacent channels) and f_0 the frequency of the channel at lower frequency. To impose that the second harmonic of channel *i* falls exactly in the middle between channels *j* and *j+1* we have to set:

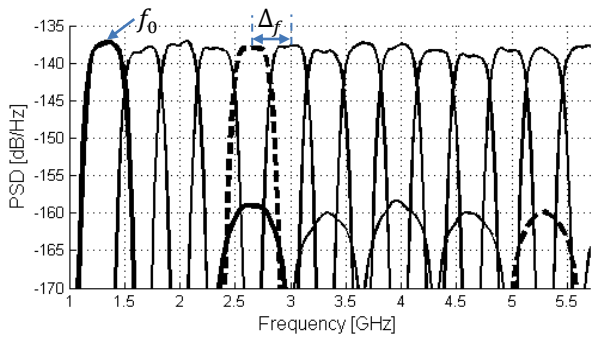

Fig. 3 Upstream worst frequency allocation example.

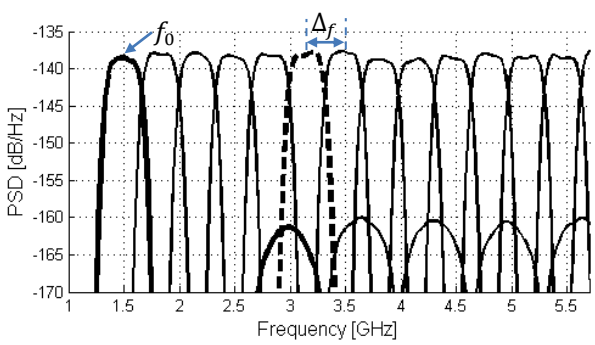

Fig. 4 Upstream best frequency allocation example.

$$2f_0 + 2i\Delta_f = f_0 + j\Delta_f + \Delta_f/2 \quad (1)$$

After few trivial mathematical steps, it is possible to determine the best value for f_0:

$$f_0 = (j - 2i)\Delta_f + \Delta_f/2 \quad (2)$$

Considering that from the previously mentioned R-MZM requirements f_0 should be above a given minimum frequency f_{min} of about 1 GHz, it turns out that the condition expressed in Eq. (2) can be satisfied imposing the lowest integer value $k = (j - 2i)$ for which $f_0 = k\Delta_f + \Delta_f/2 > f_{min}$. In the following, we will call this condition the "best frequency allocation", while for comparison we will indicate as "worst frequency allocation" the condition $f_0 = k\Delta_f$. In order to better highlight this concept, Fig. 3 and Fig. 4 respectively depict how the position of second harmonics changes according to the worst and best frequency allocations. In the worst case example, depicted in Fig. 3, the fifth channel (dashed curve) is affected by the second harmonic of the first channel). On the contrary, with the best case allocation shown in Fig. 4 , this penalty is mitigated, since the second harmonics of all sub-carrier fall in the middle of two adjacent channel, so that it is greatly filtered out at the receiver by the bandpass filter that has to select each subcarrier.

IV. Experimental Setup and Measurements

The experimental setup for the upstream path of the FABULOUS architecture is shown in Fig. 5 and it is based on a realistic PON ODN connected to two ONUs, as described in our previous work published in [10]. A CW optical seed (at 1550 nm, from +7 to +12 dBm launch in the ODN) generated at the OLT is sent to the ODN and reached the ONU, where it is SOA-amplified, modulated and reflected back. The ONU under test is composed by discrete components and it is slightly different than the one depicted in Fig. 1; indeed, as reported in Fig. 5, we placed a single bidirectional SOA element at the ONU input instead of one per each arm of the loop. An Arbitrary Waveform Generator (AWG) generates two independent 16-QAM signals which drive the two ONUs, organized according to Fig. 1. Each AWG output is split into two driving signals that, after crossing two identical electrical paths, are applied to the two R-MZM electrodes. A PBS separates the CW seed coming from the OLT into two orthogonal polarization components, that feed the two opposite R-MZM inputs, which are independently modulated by the co-propagating 16-QAM electrical signals. The modulated optical signals are recombined by the PBS and sent back to the OLT.

The ODN is composed by 37 km of real installed metropolitan buried SMF fibers (running in the city center of Turin, Italy), an optical attenuator to change the ODN loss, and a 1x4 optical splitter. The overall experimental demonstrator is composed by 1 OLT, 2 active ONUs plus a noise loading setup regulated in order to emulate the ASE noise that would be generated by other 30 additional ONUs. ASE noise and bandwidth allocation thus emulate the situation of 32 ONUs working over a single wavelength.

It is worth to remark that, with this experiment, we always tested the worst working condition for all the emulated ONUs, since we forced them experiencing the maximum possible transmission distance and ODN loss that still support 1 Gbps per user. This is, in terms of ODN, the same approach followed in all ITU-T standards [1],[2].

The US signal reaching the OLT is demodulated by means of a single polarization optical coherent receiver, where the transmitted CW signal is also used as local oscillator in a homodyne self-coherent setup. The single polarization operation is made possible by the ONU 90° polarization rotation, does not require any polarization control, and allows to halve the number of balanced detectors, ADC and DSP blocks.

The OLT two coherent receiver electrical outputs are sampled by a real-time oscilloscope (RTO) running at 12.5 GSample/s and off-line processed in Matlab© with a digital signal processing consisting of:

- a down-converting stage, reducing the DSP rate to 2 sample/sym (≈600 MSample/s);
- a feed-forward adaptive equalizer, with 31 complex taps updated by Constant Modulus Algorithm (CMA);
- a Carrier Phase Estimation (CPE) using a Viterbi-Viterbi algorithm.

First, we verified the theoretical evaluations and assumptions explained in previous section. In Fig. 6 , we show a single ONU transmitted signal spectrum located at 2 GHz,

and modulated with $m_{index}=0.2$ or 0.4. To obtain a sufficient optical resolution, we had to take this picture using a Brillouin Optical Spectrum Analyzer (BOSA) with a resolution of 0.08 pm. Fig. 6 shows that the third harmonic is negligible for $m_{index}=0.2$ and is barely visible for $m_{index}=0.4$ compared to the useful subcarrier, while the second harmonic is relevant in both cases.

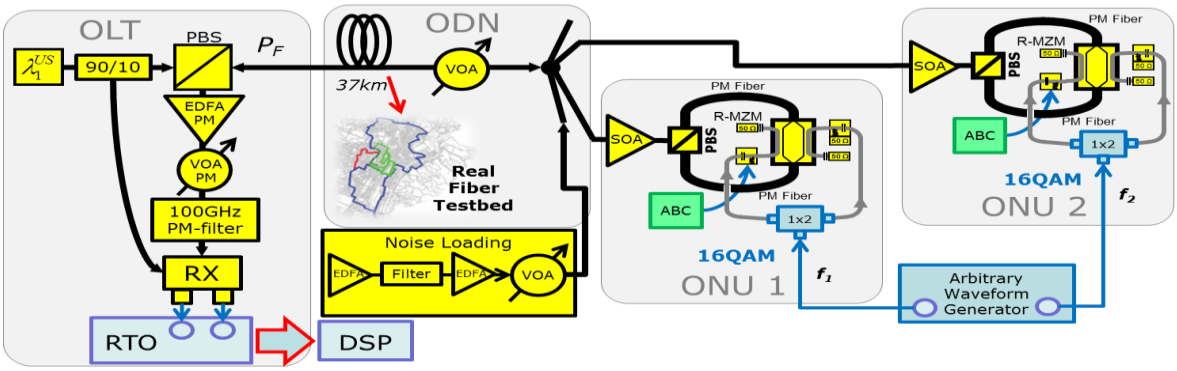

Fig. 5 Full experimental setup with installed fiber and two active ONUs. (PBS: Polarizing Beam Splitter, VOA: Variable Optical Amplifier, EDFA: Erbium Doped Fiber Amplifier, PM: Polarization Maintaining, RTO: Real Time Oscilloscope, DSP: Digital Signal Processing, SOA: Semiconductor Optical Amplifier, ABC: Automatic Bias Control, R-MZM: Reflective Mach Zehnder Modulator).

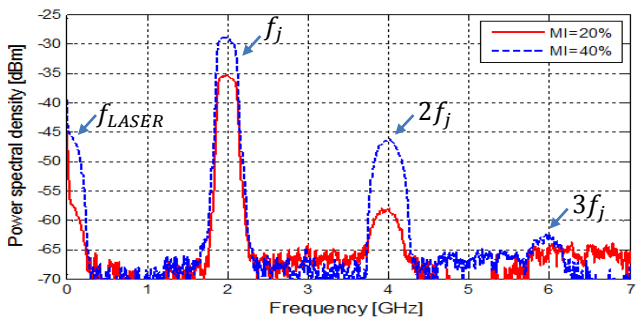

Fig. 6 16-QAM optical spectrum at the output of a single ONU, for subcarrier frequency equal to 2 GHz, m_{index} = 0.2 or 0.4. The frequency axis is set so that $f=0$ corresponds to the CW laser central frequency.

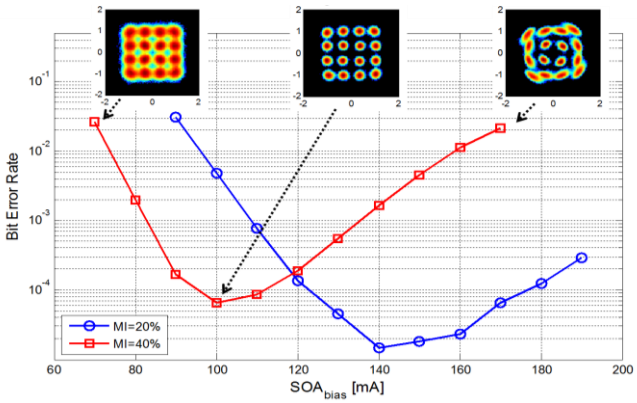

Fig. 7 Pre-FEC BER vs. SOA bias current, for a m_{index} of 0.2 and 0.4 and ODN loss of 25 dB.

One of the key optimization procedures we implemented was related to the SOA working conditions, as highlighted by Fig. 7 that shows the resulting BER vs. SOA bias current for two different modulation indexes and a fixed 25 dB ODN loss. From this figure, it is possible to notice how a wrong choice on the SOA bias current can cause a significant penalty on the system performances. In fact, if the bias current is too low, a low optical signal-to-noise ratio (OSNR) is obtained at the receiver; on the contrary, if the bias current is too high, the SOA works in its saturation region and the received signal results distorted. Therefore, for every working condition identified by the pair of parameters m_{index} and ODN loss, the optimum SOA bias current has been computed and collected, as shown in Fig. 8 . <u>This optimization was also useful in order to correctly evaluate the OSNR (over a bandwidth of 0.1 nm) at the output of the reflective ONU as a function of the ODN loss, obtaining the results summarized in Fig. 9.</u>

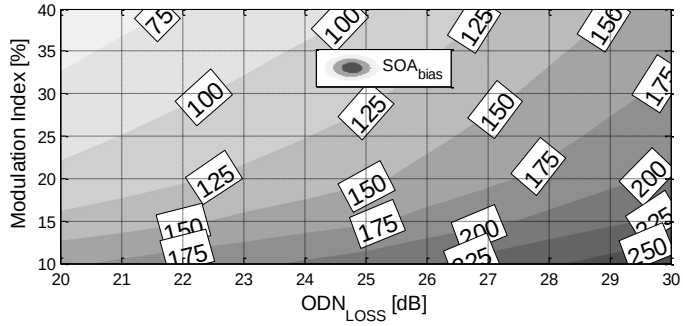

Fig. 8 Optimum SOA bias current for each working condition (m_{index} and ODN loss).

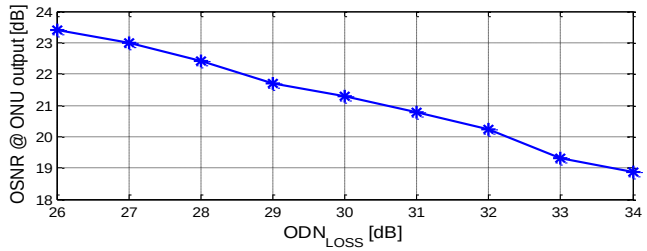

Fig. 9 OSNR vs ODN loss at the reflective ONU output

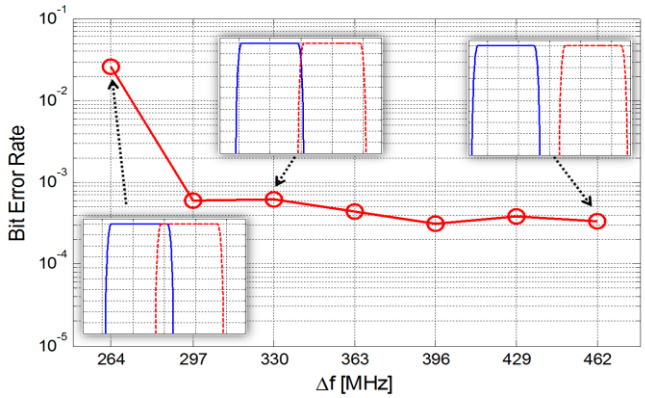

Fig. 10 Effect of frequency spacing among sub-carriers (experimental results). The insets shows for clarity the resulting spectrum (simulative results).

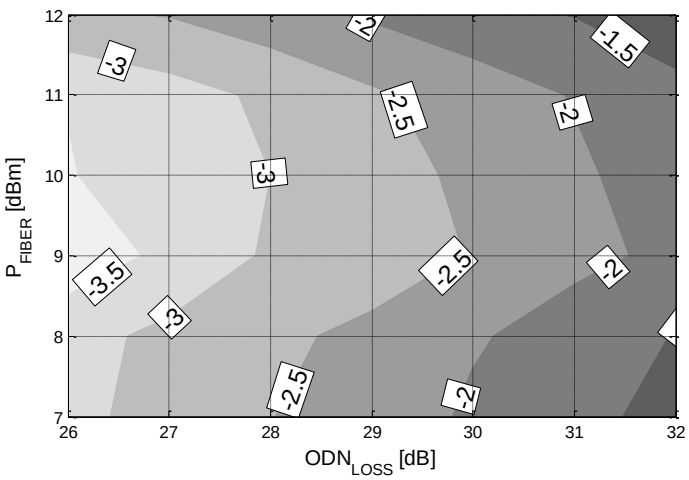

Fig. 11 BER vs ODN loss vs P_{FIBER}

Another type of optimization we performed was related to the minimum channel spacing. In Fig. 10 we show BER vs. electrical channel separation Δ_f with an ODN loss of 30 dB, 37 km of fiber and two channels: it is evident that, for $\Delta_f \geq 0.9 \cdot B_{RF}$, the effect of adjacent channels interference becomes negligible, confirming our choice of $\Delta_f = B_{RF}$, confirming that this is the choice that allows the highest spectral efficiency at the minimum BER penalty.

In order to compute the optimum launch optical power at the OLT output, we evaluated the performances of the system in terms of BER as a function of ODN loss, setting the launch power from +7 to +12 dBm. From the values summarized in Fig. 11, it results that the best performances are obtained with a launch power of +9 dBm; a further increase of the launch power does not correspond to an improvement of the system performance, due to the onset of nonlinear effects, likely dominated by the stimulated Brillouin scattering effect.

We thus set the launch power to +9 dBm and we measured the full system performances as a function of modulation index and ODN loss: Fig. 12 and Fig. 13 show contour plots of the pre-FEC BER for the worst and best frequency allocation respectively.

Every contour plot point has been obtained under SOA optimized condition using the parameters of Fig. 8 and channel spacing $\Delta_f = B_{RF}$. We also added the contour lines corresponding to the thresholds of two different FEC: a RS(1023,1007)+BCH(2047,1952) as defined in G.795.1–I.4, (FEC 1), and the FEC presented in [11] (FEC 2). The main characteristics of these FEC, whose correction ability for BER post-FEC is 10^{-15}, are resumed in Table 1.

TABLE I
MAIN CHARACTERISTICS OF THE CONSIDERED FEC

FEC	Code	BER PRE-FEC THRESHOLD	Overhead
FEC1	RS(1023,1007) + BCH(2047,1952)	$2.17 \cdot 10^{-3}$	6.69%
FEC2	RS(992,956) + LDPC(9216,7936)	$1.0 \cdot 10^{-2}$	20.5%

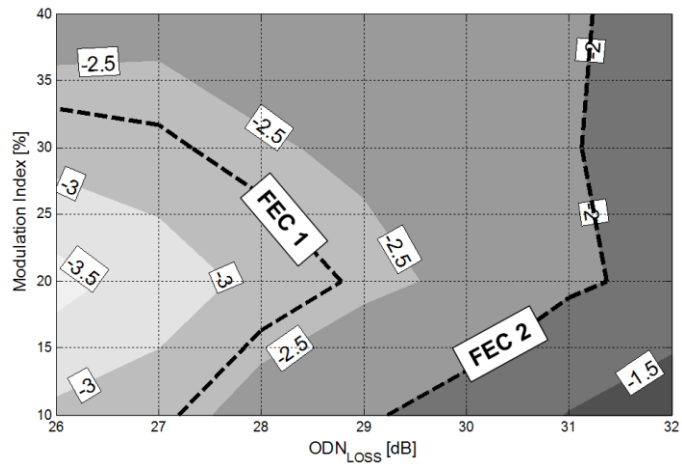

Fig. 12 BER vs ODN loss vs. m_{index} with worst frequency allocation.

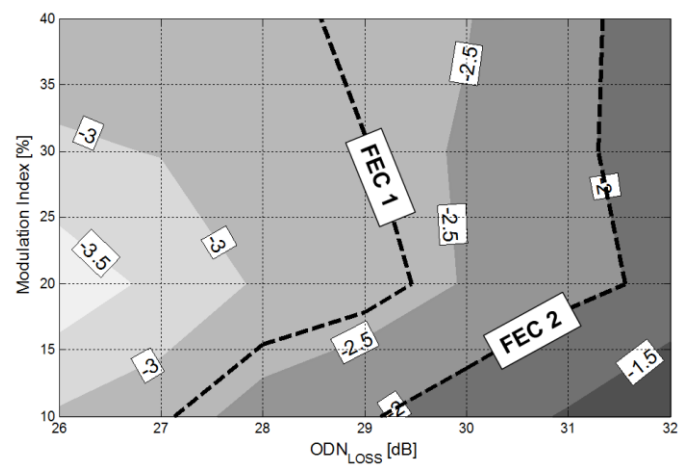

Fig. 13 BER vs ODN loss vs. m_{index} with best frequency allocation.

The results shown in Fig. 13 are the ultimate results of our project demonstrator: the best case of Fig. 13 shows the possibility of achieving more than 31 dB of ODN loss using FEC 2, or 29 dB using the more standard FEC 1.

We observe that our FDMA system works in continuous mode transmission also in the upstream so that advanced FEC (like FEC 2) are possible, while traditional TDMA-based ITU or IEEE PON standards work in burst mode, and consequently only simple and short FEC schemes can be used.

V. Conclusion

We have demonstrated, focusing on the upstream path only, the feasibility of a FDMA reflective PON with 32 ONUs per wavelength, a bit rate per user of 1 Gbps and a total capacity of 32 Gbps per wavelength with an ODN loss of over 31 dB. The FABULOUS system is fully compliant with the standardized ODN loss requirement while outperforming NG-PON2 (in which the so-called TWDM-PON implementation envisions 2.5 Gbps per wavelength upstream) with a more than tenfold increase in the upstream capacity. This is achieved without requiring tunable lasers at the ONU (but only tunable filters) and with an ONU DSP that runs only at the single channel baud rate (approx. 300 Mbaud in our demonstrator). This results allows to envision two possible scenarios:

- an aggressive long-term scenario using for instance 4 upstream wavelengths (just like it is today envisioned for the first releases of TWDM-PON) for a total capacity of 4x32 = 128 users, each running at 1 Gbps upstream (128 Gbps upstream aggregated capacity, to be compared to the 4x2.5 = 10 Gbps of a four wavelengths TWDM-PON);
- an alternative medium-term approach that avoids using WDM (thus significantly reducing complexity and cost) and uses a single upstream wavelength for all ONU's for an aggregated capacity of 32 Gbps, still greatly outperforming the 10 Gbps of TWDM-PON.

Acknowledgment

This work was realized in the framework of the FABULOUS European Project, contract n. 318704. The authors also thank Aragon Photonics for lending the BOSA instrument.

References

[1] ITU-T Recommendation G.989.1 (03/2013) "40-Gigabit-capable passive optical networks (NG-PON2)"

[2] ITU-T Recommendation G.987.2 (10/2010) "10-Gigabit-capable passive optical networks (XG-PON): Physical media dependent (PMD) layer specification"

[3] Project web site: www.fabulous-project.eu

[4] S. Menezo, B. Charbonnier, G.B. de Farias, D. Thomson, P. Grosse, A. Myko, J.M. Fedeli, B. Ben Bakir, G.T. Reed, A. Lebreton, "Reflective silicon Mach-Zehnder modulator with Faraday rotator mirror effect for self-coherent transmission", *Optical Fiber Communication Conference and Exposition (OFC/NFOEC)*, paper JTh2A.30, Anaheim, CA, 17-21 March 2013.

[5] S. Abrate et. al., "FDMA-PON architecture according to the FABULOUS European Project" *Proc. SPIE 8645, Broadband Access Communication Technologies VII*, San Francisco, California, USA January 4, 2013.

[6] B. Charbonnier, N. Brochier, P. Chanclou "(O)FDMA PON over a legacy 30dB ODN", *Optical Fiber Communication Conference and Exposition (OFC/NFOEC)*, paper OTuK1, Los Angeles (CA) USA, 6-10 March 2011.

[7] B. Charbonnier, S. Menezo, P. O'Brien, A. Lebreton, J. M. Fedeli, B. Ben Bakir, "Silicon photonics for next generation FDM/FDMA PON," *IEEE/OSA Journal of Optical Communications and Networking*, vol.4, no.9, pp.A29-A37, Sept. 2012

[8] D. Rongping, J. Le Masson, B. Charbonnier, A. Lebreton, "Dynamic resource allocation strategy for frequency-based passive optical networks," *2013 IEEE International Conference on Communications (ICC)*, pp.3879,3883, 9-13 June 2013

[9] B. Charbonnier, N. Brochier, P. Chanclou, "Reflective polarisation independent Mach-Zenhder modulator for FDMA/OFDMA PON," *Electronics Letters*, vol.46, no.25, pp.1682,1683, Dec. 2010

[10] S. Straullu et al., "Reflective FDMA-PON with 32 Gbps upstream capacity per wavelength and more than 32 dB ODN loss", ECOC 2014, Cannes, France, Th.2.6.3.

[11] N. Kamiya, S. Shioiri, "Concatenated QC-LDPC and SPC Codes for 100 Gps Ultra Long-Haul Optical Transmission Systems", OFC 2010, San Diego, OThL2.

Stefano Straullu graduated in Telecommunications Engineering in 2005 at Politecnico di Torino, Turin, Italy, with a thesis about the project, the realization and the testing of opto-electronic subsystems for packet-switched optical networks, realized in the PhotonLab of Istituto Superiore Mario Boella of Turin. In 2006, he joined the Integration Testing team of Motorola Electronics S.p.A. of Turin. Since May 2009, he has been a researcher at the Istituto Superiore Mario Boella, Turin, Italy. He has published more than 40 journal and conference papers. Since early 2012, he has been pursuing a Ph.D. in Electronics and Communications Engineering at Politecnico di Torino, Italy.

Paolo Savio received the M.S. degree in electrical engineering from the Politecnico di Torino, Torino, Italy, and the University of Illinois at Chicago (following the TOP-UIC exchange program) in 1999. In 2000 he joined Accent srl, Vimercate (Mi), Italy, working on integrated circuit design and verification. From 2004 to 2008 in Fondazione Torino Wireless, he was involved in technology transfer and acceleration activities for SMEs, following the development of innovative prototypes. He is currently with Istituto Superiore Mario Boella.

Joana Chang graduated in Telecommunications Engineering in 2008 at Universidad Católica Andrés Bello, in Caracas, Venezuela. From 2008 to 2011, she worked as a core network planning engineer for a Telecom operator in Venezuela. In 2012 received the M.S. degree in optical communications and photonic technologies from Politecnico di Torino, in Turin, Italy. Since October 2012 she joined Politecnico di Torino as a research assistant.

Valter Ferrero Valter Ferrero (M'97) received the Laurea degree (summa cum laude) in ingegneria elettronica from Politecnico di Torino, Torino, Italy, in 1994. In 1994, he collaborated with Politecnico di Torino, working on optical coherent systems. From 1995 to 1996, he was with GEC Marconi, Genova, Italy. In 1997, he was in charge of the optical laboratory, Department of Electrical Engineering, Politecnico di Torino, and was promoted to Assistant Professor in 2001. He is currently with the Optical Communication Group, Politecnico di Torino, supervising the PhotonLab optical laboratory conduction and directing several research projects related to optical communications. His current research interests include optical coherent communications free space optical communications, and Next Generation Passive Optical Networks.

Antonino Nespola received the M.S. and Ph.D. degrees in electrical engineering from the Politecnico of Torino, in 1995 and 2000, respectively. From 1997 to 1998, he was a Visiting Researcher in the Photonics Laboratory of the University of California Los Angeles. From 1999 to 2003 he was Member of Technical Staff and R&D Lab Director in Corning, Milan, where he conducted research in high-speed opto-electronics. In 2003, he joined Pirelli Labs, Milan, as senior researcher. He is currently Senior Researcher at ISMB. He has published over 40 journal and conference papers, and holds 3 U.S./European patents.

Roberto Gaudino is currently assistant Professor at Politecnico di Torino, Italy. His main research interest is in the long haul DWDM systems, fiber non-linearity, modelling of optical communication systems and on the experimental implementation of optical networks. Starting from his previous researches on fiber modelling, on new optical modulation formats, such as duo-binary, polarization or phase modulation, and on coherent optical detection, he is currently investigating on short-reach optical links using plastic optical fibers. He spent one year in 1997 at the Georgia Institute of Technology, Atlanta, as a visiting researcher. From 1998, he is with the team that coordinates the development of the commercial optical system simulation software OptSim (Artis Software Corp.,now acquired by RSoft Design). He has consulted for several companies and he is author or coauthor of more than 80 papers in the field of Optical Fiber Transmission and Optical Networks. He has been the coordinator of the EU FP6-IST STREP project "POF-ALL" and

"POF-PLUS" and currently is the scientific coordinator of the "FABULOUS" EU STREP.

Silvio Abrate graduated in telecommunications engineering in 1999 at Politecnico di Torino, with a thesis about the distribution of satellite television over an in-building fiber infrastructure. Since 2001 he was with the Optical Networks Division of Alcatel S.p.A., in Vimercate (MI). Since February 2003 he has been a Senior Researcher at Istituto Superiore Mario Boella, with the role of coordinator of the PHOtonic Technologies and Optical Networks Laboratory (PhotonLab) held by the institute in cooperation with Politecnico di Torino. Silvio Abrate is author or coauthor of over 80 journal and conference papers and two book chapters, and holds 4 U.S./European patents. He currently is project manager of the "FABULOUS" EU STREP.