POLITECNICO DI TORINO
Repository ISTITUZIONALE

Unbundling in Current Broadband and Next-Generation Ultra-Broadband Access Networks

Original
Unbundling in Current Broadband and
Next-Generation Ultra-Broadband Access Networks / Gaudino, Roberto; Romeo, Giuliano; Franco, Mazzenga; Luca, Valcarenghi; Francesco, Vatalaro. - In: FIBER AND INTEGRATED OPTICS. - ISSN 0146-8030. - STAMPA. - 33:3(2014), pp. 129-148. [10.1080/01468030.2014.892185]

Availability:
This version is available at: 11583/2555561 since:

Publisher:
Taylor & Francis Group, LLC

Published
DOI:10.1080/01468030.2014.892185

Terms of use:

This article is made available under terms and conditions as specified in the corresponding bibliographic description in the repository

Publisher copyright

(Article begins on next page)

12 October 2024

Unbundling in Current Broadband and Next-Generation Ultra-Broadband Access Networks

(Invited Paper)

Roberto Gaudino[1], Romeo Giuliano[2], Franco Mazzenga[2], Luca Valcarenghi[3], Francesco Vatalaro[2]

[1] Dipartimento di Elettronica e Telecomunicazioni (DET), Politecnico di Torino, Torino, Italy;

[2] Department of Enterprise Engineering, Università di Roma Tor Vergata, Rome, Italy;

[3] Scuola Superiore Sant'Anna, Pisa, Italy.

Abstract: This paper overviews the methods that are currently under investigation for implementing multi-operator open-access/shared-access techniques in next generation access (NGA) ultra-broadband architectures, starting from the traditional "unbundling-of-the-local-loop" (ULL) techniques implemented in legacy twisted-pair DSL access networks. A straightforward replication of these copper-based ULL techniques is usually not feasible on NGA networks, including FTTH point-to-multipoint PONs. To investigate this issue, the paper first gives a concise description of traditional copper-based ULL solutions, then focalizes on both NGA hybrid fiber–copper DSL FTTCab scenarios and on FTTH, by accounting for the mix of regulatory and technological reasons driving the NGA migration path, focusing mostly on the European situation.

Keywords: next-generation access (NGA), passive optical network (PON), network virtualization, unbundling of the local loop (ULL), virtual unbundling of the local access (VULA).

Acknowledgments: This work was supported by the Italian Ministry of Education, University and Research (MIUR) within the PRIN-2010 project ROAD-NGN "Optical Access Network with optical frequency/wavelength division multiple access for next generation networks".

1 Introduction

In several Countries broad-band (BB) access networks mostly provide access products based on all the different flavors of DSL (Digital Subscriber Line) to allow competition among different carriers on a point-to-point last-mile copper line. Today's most popular alternatives are Asymmetric DSL (ADSL) and ADSL2+, typically able to provide the client with data-rates up to a few ten Mbit/s in the downstream (DS) direction and some 100 kbit/s in the upstream (US) direction, respectively. To increase speed and Quality of Service (QoS), the next step generally is Very-high-bit-rate DSL2 (VDSL2), providing up to several ten Mbit/s (not less than 30 Mbit/s) in the DS direction but only when the user is located at a short distance from the serving Digital Subscriber Line Access Multiplexer (DSLAM). In order to further boost speed and QoS, the so-called "Vectoring" technique has been introduced that can improve VDSL2 implementations in certain architecture scenarios. Furthermore, standardization activities are presently going on inside the International Telecommunication Union (ITU) to introduce a new hybrid fiber–copper standard, the so-called G.fast [1], capable to provide aggregated US+DS data rates in the order of 1 Gbit/s in fiber-to-the distribution point (FTTDp) architectures. Figure 1 shows the migration path of DSL technologies, from ADSL to G.fast.

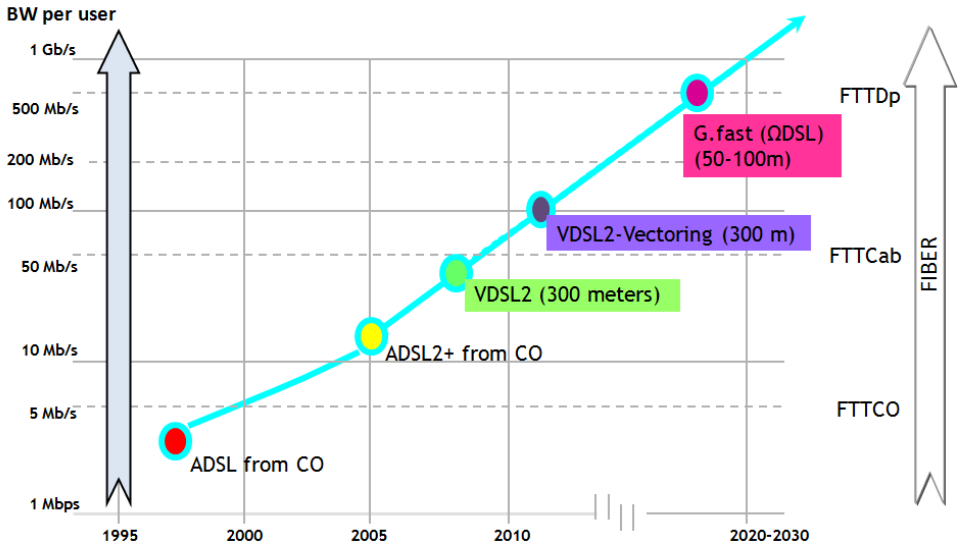

Figure 1: DSL technologies migration path (Courtesy: Alcatel Lucent).

The next step towards ultra-broadband (UBB) access, already implemented in some Countries, aims at providing a significant increase of the user data-rate, along with more stable performance and better QoS as requested by the forthcoming advanced video services (e.g., IP-TV on 4k video screens).

The present paper mostly concentrates on technological and regulatory issues, which are strictly related between them, in typical European Union scenarios. In Europe, the diffusion of high-speed Internet access is being strongly encouraged by the European Commission. In fact, in 2010, the Digital Agenda for Europe

(DAE) [2] set the objectives for UBB: by 2020 all European citizens should access the Internet at bit-rates greater than 30 Mbit/s, and not less than 50 percent of European households should be able to subscribe contracts at speeds over 100 Mbit/s.

The technology originally assumed as baseline for the latter target of DAE was considered to be Fiber-To-The-Home (FTTH). Anyway, this turned out to be one reasonable solution only in green-field deployments, where can be delivered at reasonable cost, but at least in Europe telecom operators have to mostly deal with brown-field deployments in built-up often dense urban areas. Therefore, in the last few years the mainstream strategy towards UBB developed by most European telecom operators involved a careful evolutionary migration path from the today ubiquitously deployed all-copper DSL access networks to all-optical access networks based on passive optical networks (PONs). The evolutionary strategy is implemented case-by-case using one of the possible intermediate hybrid fiber–copper solutions, including Fiber-to-the-Cabinet (FTTCab) and/or FTTDp. The hybrid solution reported in Figure 2 schematically shows the migration from FTTCab towards the full-optical future-proof FTTH PON architecture, possibly including FTTDp as an intermediate step. Overall, we will indicate all these architecture solutions (i.e., FTTCab, FTTDp, FTTH) as Next Generation Access (NGA) networks in the rest of this paper.

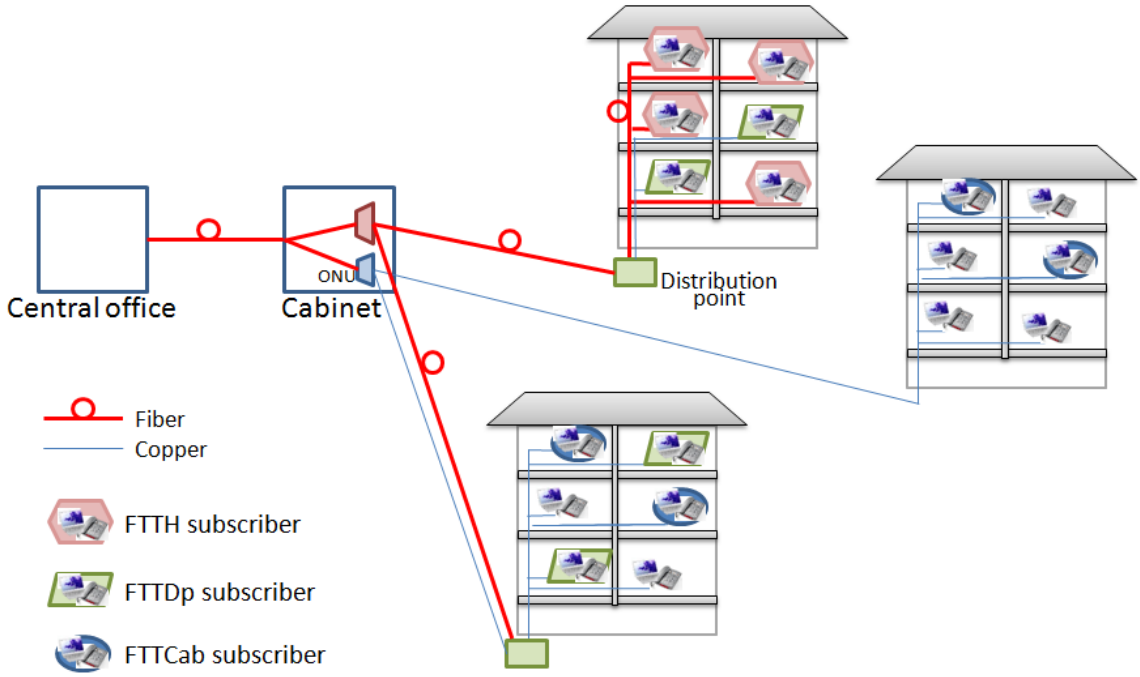

Figure 2: Fiber-copper hybrid access architectures (FTTCab, FTTDp), and FTTH.

On top of the complex economical and technological issues to actually implement this evolution towards UBB, one of the key technical problems that arose in line with the present European regulatory framework is how to ensure open-access, i.e. means to allow fair, shared and cost-effective multi-operator use of these new networks. In fact, National Regulation Authorities (NRAs) have rights to intervene with the aims of

enforcing fair and non-discriminatory access to incumbents' networks, of promoting competition in the market, and of guaranteeing respect of the final user rights, without hindering innovation and promoting investments in new infrastructures.

Generally, the abovementioned objectives were successfully balanced in the last ten years of BB development, thanks to the evolution of the copper-based DSL technologies and networks, well-suited to allow open access features through the "unbundling-of-the-local-loop" (ULL) techniques. A similar purpose unveils numerous complexities at technical level when attempting to transpose it to NGA network architectures, while it is also still very controversial between economists in terms of proactive effects towards UBB rate of penetration. As an example, having carried on a study on twenty OECD Countries between 2003 and 2008, Bouckaert and co-authors argued that: *i*) regulatory policies that promote the incumbent's ULL could adversely affect firms' incentives to invest in the development of the network, especially if they are limited to promoting intra-platform competition based on services; *ii*) the regulation based on ULL or on shared access designed to promote intra-platform competition does not have significant impact on BB penetration [3]. As a matter of fact, while they were the first Country to enforce unbundling regulations for the fair BB access through their 1997 "Telecommunications Act", the USA suppressed ULL regulation on copper networks in 2005. When in 2010 the Federal Communications Commission (FCC) launched the "Connecting America: National Broadband Plan", ULL was not imposed for UBB fiber-based solutions as a result of an intense public debate (e.g., see [4], [5], [6]).

The main goal of this paper is to examine under which circumstances ULL can be actually implemented in NGA networks. Although we mostly limit our attention to technical issues, the problem we consider necessarily involves joint examination of both technological feasibility and regulatory constraints.

To reach its aims, the paper is organized as follows. Section 2 presents the technologies that are currently used for ULL, in order to briefly explain the basic concepts, and to put them in the specific context of currently deployed copper-based DSL networks. Section 3 presents the existing European regulatory framework for DSL unbundling, providing a view on implementation of the EC recommendations among some main European Member States. Section 4 considers the specific case of Sub-Loop Unbundling (SLU) at the cabinet (and at the building), especially in case of VDSL2-Vectoring solutions. Section 5 presents unbundling issues in today's deployed UBB NGA networks that, depending on the different Countries situations, are either based on FTTH GPON/EPON (Gigabit-capable/Ethernet Passive Optical Network) or on FTTx hybrid solutions. Section 6 looks towards future scenarios, presenting the outcome of some research activities out of the ROAD-NGN project [7], which is focusing on unbundling issues for next-generation PONs, such as the TWDM-PON (Time Wavelength Division Multiplexing-PON), the CWDM-PON (Coarse

Wavelength Division Multiplexing-PON) and the OFDM-PON (Orthogonal Frequency Division Multiplexing-PON). Finally, conclusions are presented in Section 7.

2 Unbundling in today copper-based DSL networks

2.1 Unbundling Classification

As reported in [8] and in [9], in principle, ULL can be provided in three ways: direct access, bitstream access, and frequency access, as summarized in Figure 3. These methods can be grouped in physical unbundling, which includes both direct access and frequency access, and logical unbundling, also known as bitstream access. Such methodologies have been applied so far to DSL networks on traditional telephone copper twisted-pair lines. Therefore, the following description utilizes DSL terminology for describing ULL methodologies, but the same description in principle can be applied to NGA, as it will be done in the following Sections of this paper.

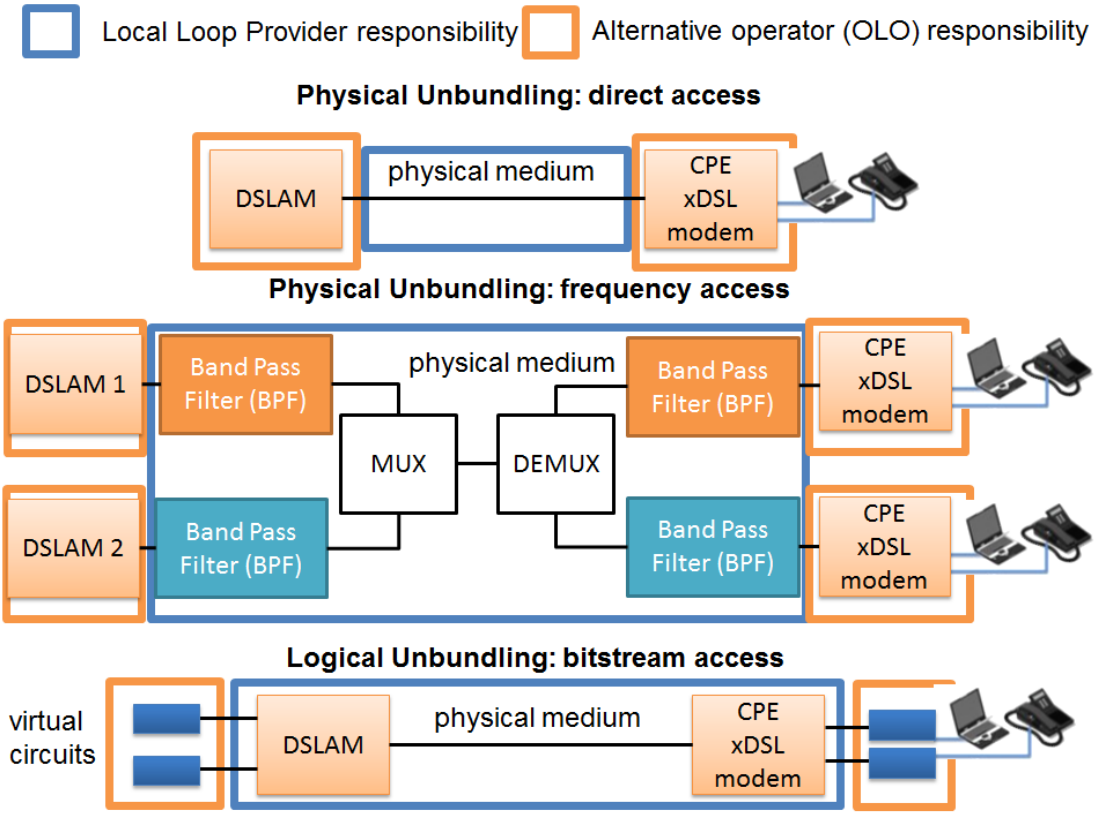

Figure 3: Unbundling techniques.

In general, when unbundling is performed, the main entities involved are the incumbent operator that provides the local loop (i.e., in general, the ex-monopolist who owns the access network) and the Other Licensed Operators (OLOs).

In direct access, the OLOs have direct access to the physical medium. The local loop provider, having built the physical communication infrastructure, is responsible for the communication lines. In the Central Office (CO), when ULL is required, the twisted pair is physically terminated in the OLO's rack, which also provides its client with the customer premises equipment (CPE) to allow communication with its own network.

In frequency access, portions of the spectrum are allocated to different operators. In this case the OLOs are divided according to some physical properties of the communication medium (e.g., different operating frequencies). The local loop provider, generally the incumbent operator, provides the devices to allow each operator to have independent communications on the same medium. Again, each OLO needs to provide the customer with the proper CPE. Currently, DSL unbundling is rarely provided through frequency access but frequency multiplex is, for example, utilized to separate different type of services, such as the Plain Old Telephone Service (POTS) and ADSL carried by one single twisted-pair.

In logical unbundling, the OLOs are given access to the local loop by creating a logical partition of available capacity at a higher protocol layer of the network, and not at the physical layer. Therefore, logical unbundling can be seen as a virtualization of the copper wire. Indeed, as defined in [10] "*[n]etwork virtualization is any form of partitioning or combining a set of network resources, and presenting (abstracting) it to users such that each user, through its set of the partitioned or combined resources has a unique, separate view of the network*". In this case, the local loop provider has the responsibility on the overall infrastructure, as depicted in Figure 3. Logical unbundling has been implemented in several different ways, as better explained in the following Sections, depending on the location of the OLO equipment, which can be either in the same CO of the incumbent operator or in a remote location inside one of the OLO's point-of-presence (PoP).

2.2 DSL Unbundling

The two commonly utilized solutions for providing DSL unbundling are direct access operating at the physical layer and logical unbundling, or "bitstream", which commonly operates at the data link layer.[1]

In direct access, the copper wire can be connected, by means of the Main Distribution Frame (MDF) located in the CO (see Figure 4), to the Line Termination/Digital Subscriber Line Access Multiplexer (LT/DSLAM) of the OLO, that is hosted in the incumbent's CO. The MDF is usually a large "manual" patch panel that allows arbitrary permutations between *N* input-output twisted pairs, where *N* can be as large as several tens of thousands in the biggest COs.

[1] Under certain conditions a third option, known as WLR (Wholesale Line Rental), allows the OLO requesting the incumbent operator to serve the customer on its behalf, so to avoid managing the copper pair, which is simply rented.

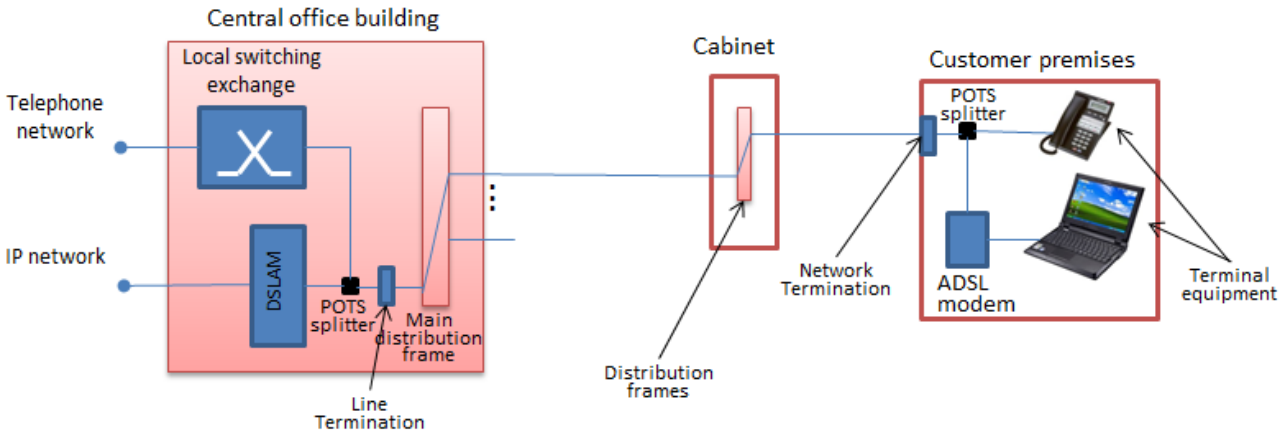

Figure 4: DSL network structure and components.

In the case of bitstream access, the incumbent shares the physical network capacity by wholesaling virtual connections between the OLO equipment and the end users.

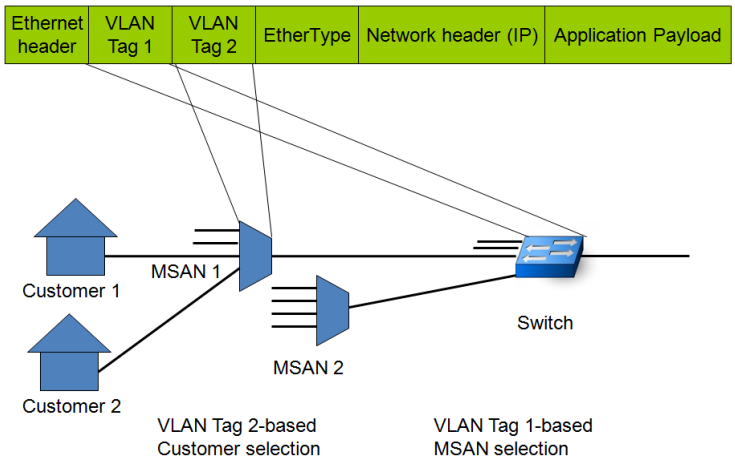

Figure 5: VLAN double TAG assignment.

Typically, as shown in Figure 5, the virtual connections correspond to Virtual LANs (VLANs) set up by means of the IEEE 802.1Q protocol [11], [12]. IEEE 802.1Q adds a TAG to the standard Ethernet packet to create virtual connections inside the same physical channel. For example, the inner VLAN tag (i.e., VLAN Tag-1) is utilized to select the Multi-Service Access Node (MSAN) (e.g., a DSLAM with Ethernet interfaces) among the ones connected to the same metro aggregation network while the outer VLAN tag (i.e., VLAN Tag-2) is utilized to select a customer among the ones connected to the same MSAN.

3 European regulatory framework for BB DSL and NGA networks

The development of NGA networks in Europe must conform to a set of general criteria established by the European Commission, which are based on a “package” of general rules on Telecommunications. It includes in particular the Framework Directive for electronic communications networks and services and the Access

Directive (Directive 2002/21/EC and Directive 2002/19/EC, respectively, both of 7 March 2002), as amended and supplemented in 2009 by the so-called "Better regulation" (Directive 2009/140/EC of 25 November 2009) [13].

In particular, by virtue of Art. 12 of the Access Directive, one National Regulatory Authority (NRA) may impose "obligations on operators to meet reasonable requests for access to, and use of, specific network elements and associated facilities" in order to avoid to "hinder the emergence of a sustainable competitive market at the retail level" requiring, among other things, the operator "to give third parties access to specified network elements and/or facilities, including (...) unbundled access to the local loop". With reference to, the development of NGA, in September 2010 the Commission also published a specific "NGA Recommendation" [14] – along with an explanatory enclosed document [15] – establishing guidelines for Member States applicable to both FTTH networks and FTTCab networks.

Among the relevant Community legislation, we must also mention the "Broadband guidelines" [16], which lay down the conditions for eligibility of State Aids for NGA networks, and the positions expressed by BEREC (Body of European Regulators for Electronic Communications that replaces the former European Regulated Group, ERG) both in terms of geographical markets [17] and on some implementation aspects of wholesale solutions and on unbundling in fiber optics networks [18].

In view of the persistent difficulties in the EU to effectively promote the development of new NGA networks based on private investments, in 2011 the Commission launched public consultations and preparatory studies for the adoption of legislative measures giving rise to additional guidelines addressed to Member States. These guidelines are contained in a very recent Recommendation (published in September 2013) [19]. The new Recommendation has the aim of encouraging investments in new networks, establishing that the wholesale ULL prices fixed for the old copper networks (i.e., DSL) should at least not decrease, while for the new optical networks (or hybrid networks) the cost-orientation obligation on tariffs can be removed. In order to lift some remedies, aiming to promote investments in the new (and therefore risky) optical access networks, the Commission envisions the so-called "Equivalence of Input" (EoI), a measure which ensures absence of discrimination between the OLOs and the retail division of the Incumbent operator.

While in existing copper networks the measure generally considered most effective is the ULL provided at the CO, this measure is no more mandated in the forthcoming NGA networks. In fact, ULL is regarded as a transitional remedy, to be overcome in favor of other more advanced forms of infrastructure competition, including those based on (measures not necessarily all applied jointly):

- Rental of cable ducts,

- Lease of dark fiber,
- SLU at a cabinet,
- Forms of co-investment between operators,
- Virtual Unbundling of the Local Access (VULA) at the CO.

The last remedy (i.e., VULA) is a possible solution originally introduced by OFCOM, the UK Regulator, able to virtualize a point-to-point line and then, allowing the OLOs to enter in providing services to their subscribers. To make VULA possible, the incumbent operator should ensure the following basic requirements:

1. Local access: interconnection should occur locally at the first feasible aggregation point;
2. Service agnostic access: like ULL, it should be a generic access product;
3. Un-contended access: no contention should be allowed on the line between the user premises and the CO where inter-connection takes place;
4. Control of access: OLOs should have maximum flexibility in their ability to offer differentiated products to clients and can potentially vary the QoS parameters;
5. Control of CPE: OLOs should be also free to choose among different CPE and be provided the flexibility needed to differentiate services delivery to their customers.

Market 4 and market 5 obligations	Dark fiber access	Cable duct access	Full copper ULL	SLU	Fiber ULL	End-to-end service	Vertical fiber access	Bitstream	VULA
Italy	Yes, primary and secondary	Yes, primary and secondary	Yes, with approved reduction costs at 8.68 €/mo. (from 9.28 €/mo.)	Yes, at 6.19€/mo. (required reduction between 5.75 €/mo. and 6.17 €/mo.)	Yes, with p2p FTTH. Cost-oriented prices	Yes, but future evaluation in case of WDM availability. Cost-oriented prices	Yes. Asymmetric obligations. Proposed cost-oriented prices only on TI	Yes, for copper and fiber. Cost-oriented prices for non-competitive areas (proposals for competitive areas with non-discrim. prices)	Yes. Cost-oriented prices for non-competitive areas (proposals for competitive areas with non-discrim. prices)
Germany	Only between ODF and cabinet (primary netw.) and only if duct access is not avail.	Only between ODF and cabinet (primary netw.)	Yes, at 10.19 €/mo. (recent increase)	Yes, at 6.79 €/mo.	Yes, with p2p FTTH. P2M with WDM not commercial-ly available. Not cost oriented.	No	No	Yes, for copper and fiber. Non-Cost-oriented.	No. Proposed by Bnetza, widespread bitstream at the regional node level and at the CAB level in the vectoring case for SLU elimination
Spain	Only if duct access is not available	Yes, primary and secondary	Yes, at 8.32 €/mo. (recent CMT increase proposal at 8.6 €/mo.)	Yes, but not practically offer is available	No	No	Yes, symmetrical obligations for all operators. Reasonable and non-discriminating prices	Yes, for copper and fiber and for speed up to 30Mbit/s. cost-oriented prices	No
France	Only between ODF and cabinet (primary netw.)	Yes, primary and secondary	Yes, at 8.9 €/mo. (recent increased in 2013)	Yes, at 8.9 €/mo.	No	No	Yes, symmetr. obligations for all operators. Reasonable and non-discrim. prices	No for fiber. Bitstream only for copper technology	No
UK	No	Yes, primary and se-condary	Yes, at ~8.11 €/mo.	Yes, at ~9.05 €/mo.	No	No	No	Yes, for copper and fiber. Cost-oriented prices for areas where: - BT is the only oper. - Up to 3 oper. and BT has the market share > 50%	Yes, not -cost oriented.

Table 1: Regulatory remedies (Market 4 and Market 5) in some main EU Member States, year 2013 (Source: our elaboration of data from Italian AGCOM, German BNetzA, Spanish CMT, French ARCEP, British Ofcom, respectively).

Conversely, in the current uncertain condition on the timing of availability of large-scale commercial WDM (Wavelength Division Multiplex) products, European regulation does not impose yet conditions for the use of wavelength unbundling.

From NRA recommendations, Table 1 reports a summary of the most relevant Regulation adopted in some main EU Member States (year 2013). It highlights how each Member State in EU not uniformly implements obligations for the so-called "Market 4" (wholesale access to physical infrastructures) and "Market 5" (wholesale broadband logical access – bitstream). Several observers consider the wide differences of national regulation for fiber as one of the obstacles to the diffusion of NGA in Europe.

4 Sub-loop unbundling limitations in FTTCab architectures

Different for ULL, which is applied at the CO, the incumbent can provide the OLO of SLU. It is a direct access to the copper line by the OLO at a stage closer to the final user (e.g., cabinet or distribution point). This method allows the OLO to improve the data rate and therefore, to provide additional services at a better quality.

One more technology, which lends itself to be implemented at the incumbent's cabinet, is the so-called "Vectoring" able to provide improved data rate and QoS by ideally eliminating the crosstalk disturbance that accompanies a signal having VDSL2 format [20], [21]. It turns out to be one useful technology in an evolutionary scenario such as the one shown in Figure 2. The standardized ITU-TG.993.5 VDSL2-Vectoring can provide data-rate performance significantly higher than those of ITU-T G.993.2 VDSL2 basic standard (even over 50 percent): at a distance of 400 m from the cabinet performance may typically increase from 60 to 100 Mbit/s in DS and from 25 to 55 Mbit/s in US. However, vectoring allows to effectively perform crosstalk suppression if lines belong to the same vectored group. In VDSL2-Vectoring, the so-called "alien-FEXT" (far-end crosstalk caused by un-vectored lines or lines related to other vectored groups within the same cable or binder) can result in marked performance degradation [22] [23]. Not only alien-FEXT is expected in multi-operator scenarios when the cable is accessed at different nodes, but also when two or more uncoordinated operators are present at, or near to, the same cabinet. Indeed, since the introduction of vectoring will follow a gradual process, in early deployment stages vectored and un-vectored lines, as well as multiple disjoint vectoring groups, may be simultaneously present in different implementation scenarios.

Unless the Regulator states clear and binding rules, when vectoring is adopted, the legacy SLU service may imply performance degradation in terms of transmission capacity of all vectored links. In fact, the benefits of vectored transmission are fully achieved only on condition that they operate in a controlled environment, so that crosstalk is ideally removed. On the contrary, experimental evidence showed that even a few VDSL2 lines not controlled within a twisted-pair cable, especially if they belong to the same binder, can lead to very strong signal quality degradation.

When VULA is adopted at the CO, the SLU obligation might be removed, not to hamper technological evolution through effective introduction of Vectoring, while still ensuring competition between operators similar to that carried on within legacy copper networks. However, this is still controversial and not all European Regulators agree on reasonable equivalence between ULL in legacy copper networks and VULA in new generation fiber/copper networks.

However, today's technology does not provide complete answers on how to achieve controlled conditions of operation in several possible coexistence scenarios. In particular, in the presence of multiple independent operators in the same cable area, if OLOs were allowed to access the incumbent's cabinet without coordination or restrictions, vectoring implementations (both for the incumbent and for the OLOs) would be discouraged, as a cost would be faced without getting the possible benefits in terms of increased bandwidth. This is a difficult trade-off between increased degree of infrastructure competition and volume of investment in the network aimed at achieving increased bit-rate and better QoS to the customer's advantage.

Some works in the literature argue that the actual impact of alien-FEXT on vectored lines is limited when un-vectored lines and disjoint vectored groups are managed by means of interference mitigation techniques [24], [25]. In particular, Dynamic Spectrum Management (DSM) [26] represents one of the most powerful solutions to allow vectored lines deployed alongside un-vectored lines to achieve good performance, while retaining most of the benefits of vectoring [25], [27].

Another proposed approach is the so-called System Level Vectoring (SLV). This technical solution envisages the application of one single vectoring algorithm across different line cards, thus increasing the vector group size in respect to the Node Level Vectoring (NLV), i.e. the vectoring of all lines within the same line card. Moreover, this concept has been further extended to include lines terminating on different DSLAMs, performing the so-called cross-DSLAM vectoring, when two operators compete on the same cable area. However, manufacturers highlight some criticalities of the SLV solution, mainly related to its implementation in a multi-operator scenario.

First of all, SLV has not been standardized yet. Only proprietary solutions are available today, that are technology-dependent and not mutually interoperable. Moreover, neither products on the market nor the vision of commercialization have been provided by vendors. Secondly, there are still limitations on the number of operators that can access the cabinet.

Furthermore, limits are imposed to the maximum distance between operators equipment. This can lead to the realization of a unique cabinet environment (in the same cabinet or in a new shared cabinet ad-hoc realized close to the existing one) for the coexistence of different equipment. To complicate matters, it is not infrequent that in heavily built-up metropolitan scenarios operators may find insufficient room to locate their cabinets close to each other.

One more practical issue is related to the increase in energy consumption, which can complicate the management of the distributed power supply, making necessary the presence of a power supply at the

cabinet(s). Finally, cooperation among operators is needed for maintenance and fault management activities.

When one single operator, e.g. the incumbent operator, controls all lines (centralized control), vectoring brings about all expected benefits. However, this way of proceeding, in practice, may face feasibility problems at least in some operating scenarios. Moreover, centralized control is not always simple to execute.

Under imperfect control, in spite of vectoring, performance returns to be unpredictable (e.g., it may vary randomly between 100 Mbit/s and 60 Mbit/s in DS direction) and this makes it difficult offering customers specific levels of guaranteed QoS. This defect, namely the random variability in time of performance, for certain UBB services may well be much more damaging and hence disincentive for customers than a reduced, but stable, data-rate. Think about the services of remotization of resources (e.g., PC desktop) in Cloud Computing services that require high-speed connection but also small and virtually constant delay. One second example is the loss of synchronism that may be caused by a sudden degradation of the transmission speed on one real-time high-definition video signal (caused by the activation of one or more un-controlled lines) which represent one of the main service offerings potentially deployable through VDSL2-Vectoring lines.[2]

Therefore, the possibility that two (or more) operators independently use VDSL2-Vectoring on the same cable should be excluded at present state-of-the-art, and this limitation should, in general, apply both if they share the same cabinet, or they use lines in different sections of the cable (e.g., the first one accesses the cabinet and the second one accesses the building).

In conclusion, if SLU is conserved, a complex regulation should be introduced that permits a limited number of operators (e.g., two) to offer VDSL2-Vectoring, while only one of them (e.g., the incumbent) should be in charge of managing the control unit of different DSLAMs located in neighboring cabinets. All the other operators should use VULA or bitstream service.

5 Unbundling technologies for UBB NGA networks: state of the art

This Section highlights how the unbundling methodologies can be applied to current UBB NGA architectures. Such architectures are mainly based on hybrid fiber-copper (e.g., FTTCab) and FTTH where the optical fiber reaches directly the end customer.

[2] "In legacy VDSL2 systems, new joining lines cause unpredictable performance reduction in other lines due to FEXT, and even loss of synchronization. Vectored systems no longer exhibit this instability." [15]. The advantage of vectoring can be lost in scenarios where un-controlled crosstalk may arise: although deep experimental evidence seems still to be lacking, it could even happen that in imperfect vectoring scenarios synchronization defects on digital video signals be perceived more annoying than those from an ordinary VDSL2 DSLAM.

5.1 Hybrid UBB NGA: Fiber to the Cabinet and VDSL

In hybrid fiber-copper networks the best applicable solutions appear to be VULA (Figure 6) at the cabinet and logical unbundling (i.e., bitstream, in Figure 7) in several nodes because of flexibility and reduced Capital Expenditure (CAPEX) as no redundant infrastructure must be deployed, as well as reduced Operative Expenditure (OPEX), as only one operator centralizes maintenance and network upgrades.

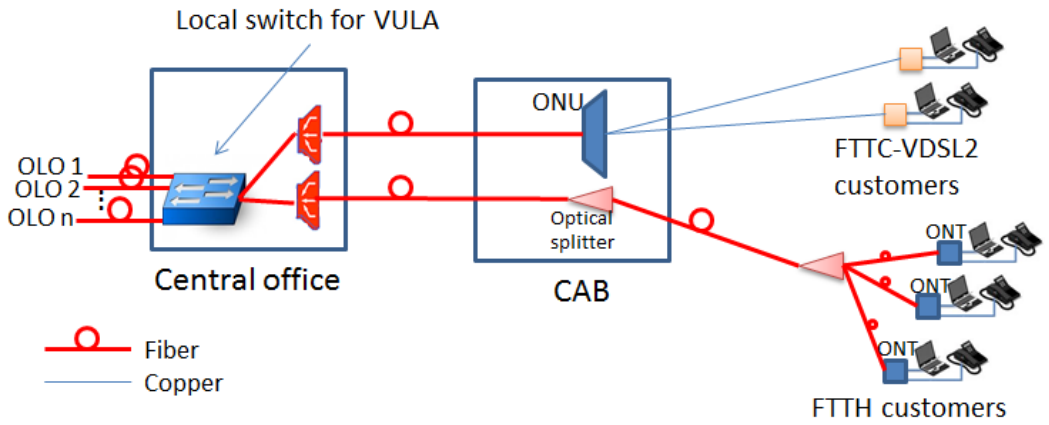

Figure 6: Virtual Unbundling Line Access (VULA) architecture [28].

For example, in Italy Telecom Italia is developing the VULA for both FTTCab and FTTH architectures [28]. In VULA, as shown in Figure 6, the OLO is delivered the traffic through VLAN at the incumbent operator CO. In Europe, VULA has been already included in regulatory practice in Austria and in the UK.

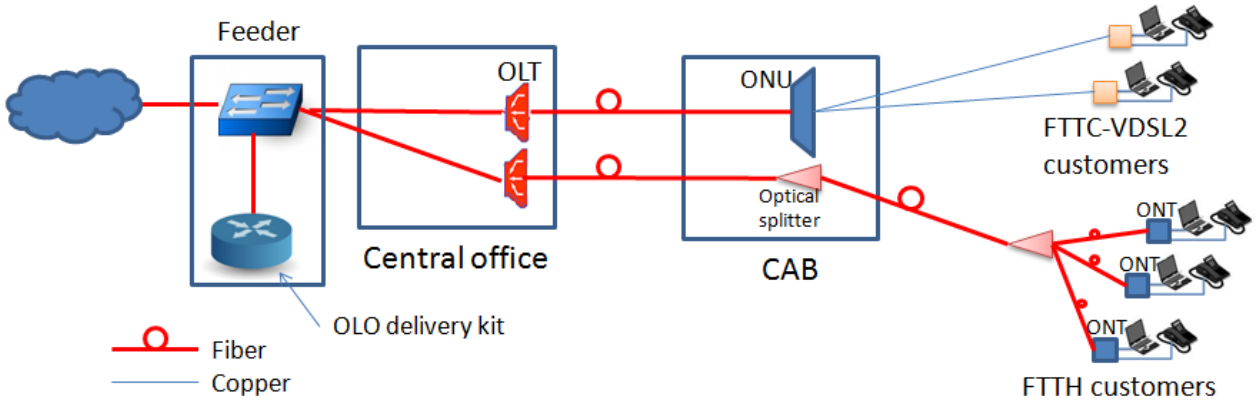

Figure 7: Bitstream NGA architecture [28].

The difference between VULA and bitstream (see Figure 6 and Figure 7) is mostly in the fact that in case of bitstream the incumbent operator manages at the lower protocol layers (e.g., Data Link layer) not only the "last mile" but also the backhauling up to different point of the national network. Thus, in bitstream the OLO can have access to a few national PoP that can be arbitrarily distant from the end user. On the contrary, in VULA the incumbent operator manages only the "last mile", while the OLO has to put its

hardware directly into the CO serving the client. The trade off for the OLO is in terms of less infrastructure cost and limited ability to personalize services for the customer (case of bitstream access at several nodes), or higher infrastructure cost and better flexibility in the access services (case of VULA at the CO).

5.2 Fiber-to-the-Home: P2P and TDM-PON solutions

FTTH is today implemented either with dedicated point-to-point (P2P) fiber connections from the CO to the user or with Time Division Multiplexing-PON (TDM-PON) architectures. In optical P2P, at least in principle, ULL can be implemented just like in today's DSL networks through direct access, by physically moving the fibers in the CO towards the selected OLO equipment. However, implementation experience showed that fiber movement can be critical and ULL in P2P FTTH can only be adopted in small-sized COs, having a few thousand access lines (typically no more than 3.000 lines). In those Countries where an existing well-developed and capillary distributed copper network should migrate towards the new optical access infrastructure, especially in large Cities where COs typically serve 10.000 lines, or more, P2P FTTH is not generally considered a viable solution, and TDM-PON solutions are preferred.

In TDM-PON, depicted in Figure 8, the situation is completely different, even in principle. The most used solution is again to provide unbundling by means of either bitstream or VULA, while direct access can be implemented through the duplication of all the network elements -- i.e., Optical Line Termination (OLT), Optical Distribution Network (ODN), Remote Node (RN) and Optical Network Unit (ONU) -- by different operators[3]. Thus, the incumbent and the OLOs utilize different networks between the OLT and the end-users. The advantage of this solution is the total network independence that, however, implies a duplication of costs. For example, in Switzerland some local power companies and Swisscom, the incumbent operator, made some limited investments in the FTTH architecture. In this scenario four fibers are deployed leaving one fiber to Swisscom, one to the power company and the remaining two for future possible future competition [29]. However, today FTTCab is the preferred solution in Switzerland too.

[3] Theoretically, if the ONUs are standards and owned by the end-user, ONU duplication is not necessary. Nevertheless, operators provide their users of a customized ONU in order to offer a greater set of services.

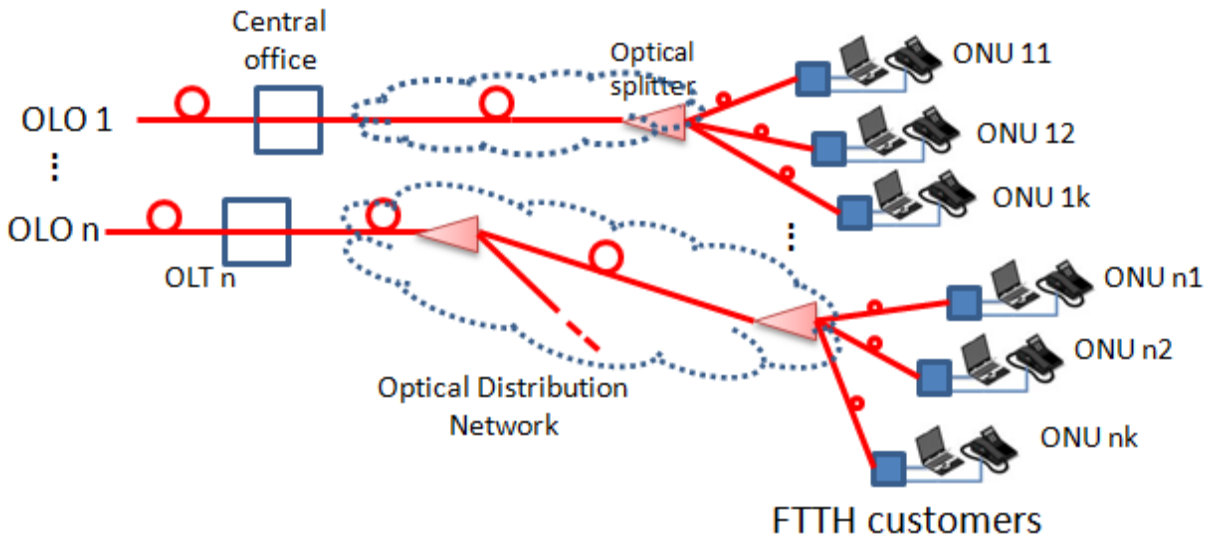

Figure 8: TDM-PON direct access.

A solution based on frequency access cannot be applied by connecting different operators' OLTs to the same ODN. Indeed, because OLTs and ONUs by different operators utilize the same frequency they would interfere. However in PONs in which the wavelength dimension is also exploited, frequency access becomes feasible.

6 Research towards Physical Unbundling in Next-Generation PON

In PON architectures, logical unbundling (such as bitstream or VULA) is the only solution that is today implemented since current PON protocols (i.e., GPON, XGPON, EPON) requires centralized control to implement TDMA (Time Division Multiple Access) and physical level unbundling at the CO is considered unfeasible. Anyway, the situation may change in the near future, since the new degree of freedom given by WDM or FDM (Frequency Division Multiplexing) may become available. In particular, this Section presents the outcome of research activities from the ROAD-NGN project, which is focused on physical unbundling issue for next-generation PON, such as WDM-PON, CWDM-PON, TWDM-PON and OFDM-PON.

6.1 WDM-based unbundling in PON

Next-generation PON (NG-PON) networks will start taking advantage of WDM. In pure WDM-PON architecture, one dedicated wavelength (per direction) is allocated for each user, thus implementing a wavelength-based P2P connection over the PON tree topology. Pure WDM-PON is usually proposed to obtain a great boost in overall PON capacity, since it would give dedicated Gigabit/s connections per user, but it may also become a way to perform unbundling, replicating on a wavelength level what it is done in today DSL network at the twisted-pair level. Figure 9 shows two possible implementation based on:

- "traditional" splitter-based PON with wavelength tunable ONU at the user side (Figure 9, top). Here

all wavelengths reach each ONU. Thus, each Operator can be assigned a (fixed or tunable) subset of wavelengths and, thanks to ONU tunability, each user can potentially connect to any Operator. Security aspects should be implemented with this configuration.

- Arrayed-waveguide grating (AWG)-based PON with wavelength tunable OLT at the CO (Figure 9, bottom): here, the wavelength reaching each ONU is fixed and determined by the AWG characteristics. Each Operator should thus be equipped with a set of tunable OLT, in order to be able to reach any user.

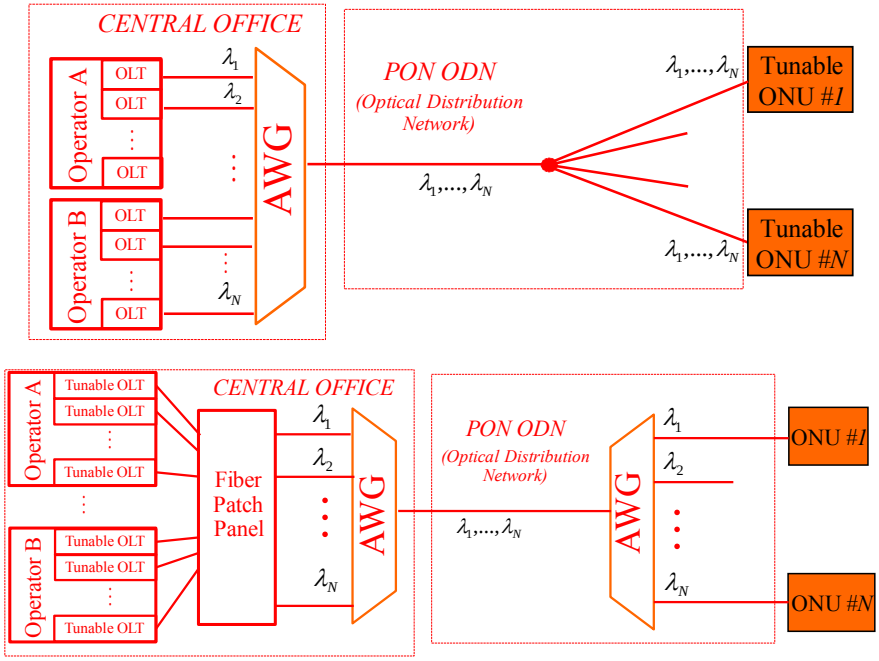

Figure 9: WDM-based unbundling in splitter- (top) and in AWG-based PON (bottom).

Pure WDM-PON has been largely studied and demonstrated at laboratory level in the last decade, but for the moment it is usually perceived as too expensive, since it involves tunable laser and tunable transmitter with Dense WDM-like quality and, consequently, a cost that seems not yet compatible with PON consumer market. A possible solution, if the number of required wavelength is not too high, is to utilize CWDM, a technique standardized in ITU-T G.694.2 (12/2003) which introduced a coarse wavelength grid based on a 20 nm spacing, initially targeting ultra high speed Local Area Network or metro network, but that could also extended to PON.

In order to find a proper balance between increased capacity and cost, ITU-T recently released the G.989.1 TWDM-PON standard, where it is envisioned to use four wavelengths per direction, still maintaining TDMA over each wavelength. In this architecture, each ONU will be equipped with tunable transmitters and receivers, to be able to work on any of the four wavelength. Even though ITU-T main goal with G.989.1 TWDM-PON is a four-fold increase in capacity compared to G.987 XG-PON, it also would allow wavelength-

based unbundling up to four operator, each using a dedicated wavelength that simultaneously reaches its own group of ONUs, still shared in TDMA as in "traditional" PON standards. Optoelectronic components required for implementing TWDM-PON are not yet completely commercially available in access networks today, but we are close to a commercial deployment, thanks to the ITU-T standardization. ONUs subscribing to a specific operator will tune their transceivers to the operator wavelength.

6.2 (O)-FDM-based unbundling in PON

An even more "granular" form of unbundling on PON is currently investigated in the Italian "ROAD-NGN" research project [7], where frequency division multiple access (FDMA) is applied on top of any wavelength used in the PON network. In particular, focusing on one given wavelength, ROAD-NGN proposes to share it among many ONUs simultaneously, assigning a dedicated portion of the electrical spectrum to each ONU by using FDM subcarrier. Similarly to what we wrote in the previous Section 6.1, FDMA (or event OFDMA, Orthogonal Frequency Division Access) is usually proposed in PON to increase overall capacity, since it opens the possibility to use advanced and spectrally efficient M-QAM modulation on each subcarrier, but it can also be envisioned to perform physical layer unbundling. In fact, OFDMA combines OFDM transmission with multiple access by assigning different OFDM subcarriers to different users and different Operators. Each subset of subcarriers is formed as one virtual link. Optical OFDM/OFDMA thus enables flexible, sub-wavelength provisioning of bandwidth in contrast to previously described WDM-based solutions, even though its actual practical application as a form of direct access unbundling solution is still completely to be studied also in ROAD-NGN. In particular, while for WDM-PON it is clear how to physically distribute the wavelengths to different operators in the CO, as shown in Figure 9 thanks to the capability of fiber optic components, the (O)-FDM approach would require to carry electrical high frequency signals between the racks of the different Operators, and concentrate them on the optoelectronic devices that would implement the actual optical modulation.

7 Discussion and conclusion

This paper presented an overview of solutions for providing unbundling in current and future BB NGA networks. As compared to the solutions currently utilized in the DSL access NGA presents specific challenges. In particular, as of today, the most feasible solution for providing unbundling in hybrid fiber-copper and fully optical UBB NGA networks appears the one based on logical unbundling (e.g., provided at the Data Link layer through VLANs) because of its low CAPEX and OPEX and its technical flexibility. However other types of solutions can become feasible when the optical access network exploit multiple wavelengths (i.e., WDM PON) or subcarriers (i.e., OFDM PON).

We conclude by remembering that unbundling strategies are only partially related to the technological considerations presented in this paper, since regulatory decisions are even more relevant. In fact, ULL

strategies greatly differ from Country to Country, and as a consequence the competition scenarios and the speed of penetration of UBB. As we discussed, differently from USA where the FCC decided to go back to "free market" condition by removing any ULL regulations on copper network, the regulatory approach in Europe followed a different path, and is still "work in progress". Each Member State implemented obligations for direct access and bitstream (not uniformly among States) provided by EC through the Access Directive and other general rules on Telecommunications.

Therefore, apart from some serious technical challenges that we underlined in the paper, it seems reasonable that in the future, if unbundling will be re-examined for NGA, and in particular for the fiber access, the intrinsic virtue of flexibility it brings about should be better traded on the basis of mutual agreements among large market actors taking into account necessary benefits for the entire ecosystem (small OLOs and the final-user), so overcoming the old approach based on compulsory, and potentially distorting, regulatory bonds only valid for one single operator.

References

[1] M. Timmers, M. Guenach, C. Nuzman, J. Maes, "G.fast: Evolving the Copper Access Network", IEEE Communications Magazine, Aug. 2013, p.74-79.

[2] European Commission, A Digital Agenda for Europe, COM(2010)245, available at: http://ec.europa.eu/europe2020/pdf/digital-agenda-communication-en.pdf

[3] J. Bouckaert, T. van Dijk, F. Verboven, "Access regulation, competition and broadband penetration: an empirical study", Telecommunications Policy (2010) vol.34, p.661-671.

[4] Declaration before the Federal Communications Commission of Robert W. Crandall, Everett M. Ehrlich, Jeffrey A. Eisenach regarding the Berkman Center study (NBP public notice 13), November 16, 2009.

[5] The Berkman Center for Internet and Society at Harvard University, "Next Generation Connectivity: A review of broadband Internet transitions and policy from around the world", February 2010, Final Report.

[6] Supplemental declaration before the Federal Communications Commission of Robert W. Crandall, Everett M. Ehrlich, Jeffrey A. Eisenach, and Allan T. Ingraham regarding the Berkman Center study (NBP public notice 13), May 10, 2010.

[7] G. Cincotti, P. Boffi, G. Maier, E. Ciaramella, L. Valcarenghi, R. Gaudino, F, Matera, A. Mecozzi, M. Santagiustina, F. Vatalaro, "The Italian research project ROAD-NGN 'Optical frequency/wavelength division multiple access techniques for next generation networks'", 15° Convegno Nazionale sulle Tecniche Fotoniche nelle Telecomunicazioni (FOTONICA), Milano, Italy 2013. See also ROAD-NGN web site http://www.roadngn.uniroma3.it/)

[8] P. Odling, B. Mayr, S. Palm, "The technical impact of the unbundling process and regulatory action," IEEE Comm. Magazine 38(5), 74–80 (2000).

[9] S. Bregni, R. Melen, “Local loop unbundling in the Italian network,” IEEE Comm. Magazine 40(10), 86–93 (2002). IEEE Std 802.1Q, 2003 Edition (2003).

[10] A.Wang, M. Iyer, R. Dutta, G. Rouskas, I. Baldine, “Network Virtualization: Technologies, Perspectives, and Frontiers,” IEEE/OSA JLT 31(4), 523–537 (2013).

[11] Juniper Networks, “VLAN design for IPTV/Multiplay Networks”, white paper, http://www.juniper.net/kr/kr/local/pdf/whitepapers/2000186-en.pdf

[12] F. Matera, A. Valenti, S. Pompei, “Unbundling and quality of service control in Ethernet Passive Optical Networks based on Virtual Private LAN Service technique,” in ConTEL 2009, pp. 283–284 (2009).

[13] “Directive 2009/140/CE of the European Parliament and the Council of the European Union of 25.11.2009”, GUCE of 18.12.2009.

[14] “Commission Recommendation of 20.09.2010 on regulated access to Next Generation Access Networks (NGA)”, Brussels, 20/09/2010, C(2010) 6223 – SEC(2010) 1037.

[15] “Accompanying document to the Commission recommendation on regulated access to Next Generation Access Networks (NGA)”, Commission of the European Communities — Commission staff working document, Brussels, 20/09/2010, SEC(2010) 1037 final, {C(2010) 6223}.

[16] “Communication from the Commission — Community Guidelines for the application of State aid rules in relation to rapid deployment of broadband networks”, GUCE C 235, 30.9.2009, p.7.

[17] ERG, “Common Position on Geographic Aspects of Market Analysis (definition and remedies)”, October 2008.

[18] ERG/BEREC, “Next Generation Access – Implementation Issues and Wholesale Products”, BEREC Report BoR (10) 08, March 2010.

[19] “Commission Recommendation of 11.9.2013 on consistent non-discrimination obligations and costing methodologies to promote competition and enhance the broadband investment environment”, Brussels, 11/09/2013, C(2013) 5761.

[20] G. Ginis, J. M. Cioffi, “Vectored Transmission for Digital Subscriber Line Systems”, IEEE Jour. on Sel. Areas in Comm., Vol. 20, No. 5, June 2002, pp. 1085-1104.

[21] R. Zidane, S. Huberman, C. Leung, L. N. Tho, “Vectored DSL: Benefits and Challenges for Service Providers”, IEEE Communications Magazine, Feb. 2013.

[22] M. Guenach, J. Meas, M. Timmers, O. Lamparter, J.C. Bischoff, M. Peeters. “Vectoring in DSL systems: Practices and Challenges”, IEEE Global Telecommunications Conference (GLOBECOM 2011), 2011, pp. 1-6.

[23] S. Vanhastel, P. Spruyt, “VDSL2 Vectoring in a Multi-operator Environment Separating Fact from Fiction”. Alcatel-Lucent TechZine, March 2012. Available at: http://www2.alcatellucent.com/blogs/techzine/2012/vdsl2-vectoring-in-a-multi-operatorenvironment-separating-fact-from-fiction/

[24] M. Mohseni, G. Ginis, J. Cioffi, “Dynamic Spectrum Management for Mixtures of Vectored and Non-vectored DSL Systems”, IEEE Conf. on Information Sciences and Systems, Princeton, NJ, March 2010.

[25] K. Kerpez, J. Cioffi, S. Galli, G. Ginis, M. Goldburg, M. Mohseni, A. Chowdhery. “Compatibility of Vectored and Non-Vectored VDSL2”. IEEE Conference on Information Sciences and Systems (CISS), Princeton, NJ, 03/2012.

[26] K. Song, S. Chung, G. Ginis, J. Cioffi, “Dynamic spectrum management for next-generation DSL systems”. IEEE Communicat. Mag., vol. 40, No. 10, Oct. 2002, pp. 101-109.

[27] A. Colmegna, S. Galli, M. Goldburg, “Methods for Supporting Vectoring when Multiple Service Providers Share the Cabinet Area”. FASTWEB/ASSIA Vectoring White Paper, April 2012.

[28] National Wholesale Telecom Italia service. See https://www.wholesale.telecomitalia.com/it/catalogo/-/catalogo_aggregator/article/1027774

[29] B. Schollkopf, R. Felder, “The Swiss way of FTTH”, ECOC 2011 Sept. 18-22, 2011, Geneva, Switzerland.

[30] V. Oksman, H. Schenk, A. Clausen, J. M. Cioffi, M. Mohseni, G. Ginis, P. E. Eriksson. “The ITU-T's new G. vector standard proliferates 100 Mb/s DSL”, *IEEE Communications Magazine,* vol. 48, 2010, p. 140-148.