POLITECNICO DI TORINO
Repository ISTITUZIONALE

A cloud-based Cyber-Physical System for environmental monitoring

Original
A cloud-based Cyber-Physical System for environmental monitoring / Sanislav, T.; Mois, G.; Folea, S.; Miclea, L.; Gambardella, Giulio; Prinetto, Paolo Ernesto. - STAMPA. - (2014), pp. 6-9. (Intervento presentato al convegno 3rd Mediterranean Conference on Embedded Computing (MECO) tenutosi a Budva, ME nel 15-19 June 2014) [10.1109/MECO.2014.6862654].

Availability:
This version is available at: 11583/2572337 since:

Publisher:
IEEE

Published
DOI:10.1109/MECO.2014.6862654

Terms of use:

This article is made available under terms and conditions as specified in the corresponding bibliographic description in the repository

Publisher copyright

(Article begins on next page)

12 October 2024

A Cloud-based Cyber-Physical System for Environmental Monitoring

Teodora Sanislav, George Mois, Silviu Folea, Liviu Miclea
Faculty of Automation and Computer Science,
Technical University of Cluj-Napoca, Cluj-Napoca, Romania
Email: {Teodora.Sanislav, George.Mois, Silviu.Folea, Liviu.Miclea}@aut.utcluj.ro

Giulio Gambardella, Paolo Prinetto
Dipartimento di Automatica e Informatica,
Politecnico di Torino, Turin, Italy
Email: {giulio.gambardella, paolo.prinetto}@polito.it

Abstract—**Cyber-Physical Systems (CPSs) represent a new generation of digital systems, where cyber entities and physical devices cooperate towards a set of common goals. The research presented in this paper aims to contribute to the development of CPSs by proposing an open architecture applicable in environmental monitoring, consisting of three layers. The paper provides a detailed description of each one of the CPS's main components. The bottom layer, composed of wireless sensor nodes, allows the acquisition of data and their transfer to the upper layers. The top and middle layers, composed of a measurements database, a knowledge base, a multi-agent society and web services, assure the proper operation of the CPS based on decision rules and complex data analyses. The proposed architecture provides a high degree of flexibility and scalability.**

Keywords-Cyber-Physical System, Environmental Monitoring, Wireless sensor network, Wireless sensor node, Agents.

I. INTRODUCTION

The recent advancement in information technology and the continuously increasing complexity of digital systems has led to the need for a new generation of intelligent solutions – Cyber-Physical Systems [1]. They integrate computing, communication and storage capabilities with monitoring and control of the entities in the physical world, actions that have to be performed dependably, safely, securely, efficiently and in real-time. CPSs consist of interconnected objects, embedded with sensors, collecting information from the physical world, and actuators, acting upon the environment, and integrated under an intelligent decision system, representing the cyber world [2].

In this context, the present paper proposes a CPS architecture for the real-time monitoring of environmental status, based on the Wireless Sensors Network (WSN) technology for data acquisition and on the cloud computing technology for storing, managing and analysing the data in a large context. Cyber-physical systems exploit the physical information collected by WSNs to bridge real and cyber spaces [2]. A WSN is composed of multiple low-power small embedded devices, called nodes, deployed in a physical environmental and having communication, sensing and data storage, and processing capabilities [3]. Depending on the application, the nodes, consisting of a sensor unit, a processor and storage unit, a transceiver and a power supply, have resource constraints regarding energy usage, communication range, processing power, and storage capabilities [4]. Due to the recent progress of the technology in micro-electromechanical systems, integrated circuits and radio frequency, WSNs are used in a wide range of applications, with emphasis on environmental monitoring [5]. The proposed CPS architecture gathers temperature and humidity information from portable low cost nodes. Thanks to the development of new generations of sensors, other physical units, such as different gas concentrations in the air, can be measured [6]. Data sensed by the sensor are sent using the User Datagram Protocol (UDP) to a measurements database, where they are collected. An intelligent cloud-based decision system transforms these sensing data into knowledge, reported to the end-users under various modalities.

The rest of the paper is structured as follows. Section II presents the CPS overall architecture, highlighting the system layers. Section III details the hardware architecture of the wireless sensing devices, while Section IV details the intelligent decision system. The final section gives the conclusion and directions for future work.

II. CPS ARCHITECTURE

The proposed CPS architecture follows the new paradigm, which adopts an information-centric view instead of a device-centric one. The information-centric perspective is essential in applications where the extraction of knowledge from the gathered information is used to drive decision-making and/or control [7]. This leads to an architecture on three layers: (I) the bottom layer, the physical one, (II) the middle layer, consisting of data and knowledge, and (III) the top layer, represented by services. The last two layers form an intelligent decision system.

This work proposes a bottom layer consisting of several sensor nodes distributed over a wide area and communicating through UDP messages, described in Section III. The middle layer contains the information acquired by the bottom layer, stored in a measurements database, the knowledge base used to provide decision and negotiation rules and a multi-agent system. This latter component has an important role in the overall CPS proper operation, consisting in monitoring, decision making and in the achievement of various data analyses performed by the top layer services. Multi-agent systems represent a viable solution for carrying out these

actions due to their distinctive features, being software programs with embedded knowledge and with specific behaviours, capable to execute tasks needed to achieve specified goals [8]. The top layer includes services for monitoring and for the analysis of acquired data. These are based on a cloud architecture, the most appropriate method to ensure high availability and scalability at low costs from a CPS client perspective. They provide a default output format, the information regarding the monitoring activity performed by CPS nodes and, upon request, different analyses based on the recordings.

By combining agents capable of operating in dynamically changing environments with cloud computing, a highly flexible and scalable system, which can automatically adjust its physical and software resources based on user needs, optimizing the costs without affecting the performances, can be obtained. The proposed CPS architecture is presented in Figure 1.

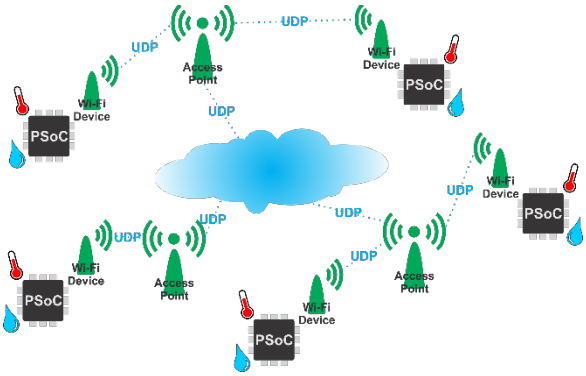

Figure 1. Cyber-physical system architecture

III. Wireless Sensor Node

The sensor nodes in environmental monitoring applications have to satisfy requirements in terms of cost, reliability, maintenance-free operation times and size [9]. Hence, a battery-powered embedded system, with the core represented by a programmable system on chip microcontroller, a PSoC 3 produced by Cypress Semiconductor, was developed for implementing the bottom layer of the proposed CPS architecture (Fig. 2) [10].

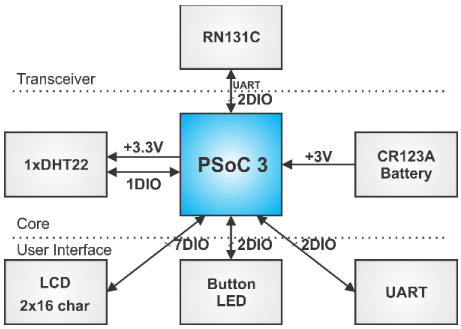

Figure 2. Wireless sensor node block diagram

By integrating discrete analog and programmable logic along with memory and a microcontroller, these devices are becoming increasingly attractive for the design of embedded systems. The use of such a device provides the system with enhanced flexibility and reduces the part count on the printed circuit board because they include a wide range of components into the chip. This has a direct impact on the node production costs and power consumption. The sensing component of the node consists in a DHT22 digital temperature and humidity sensor. Due to the flexibility provided by the core microcontroller, a wide range of analog and digital sensors can be attached to the device [11]. Communication is performed by an RN-131C Wireless LAN Module from Roving Networks [12]. Although this is a standalone, embedded wireless 802.11 b/g networking module, it is used only for sending serial data through UDP to a previously set IP address. This action is initiated by the core microcontroller sending commands over the serial interface to the WLAN module. The most important advantage offered by the use of the Wi-Fi technology consists in the possibility of connecting the device to the existent infrastructure, but this comes at a price. As compared to ZigBee, ISA 100 or other wireless communication technologies, the lifetime of the battery is limited by the increased power consumption in the case of Wi-Fi. Another advantage is represented by the high transfer rates, reaching up to 1-4Mbps even when encryption is involved (WEP, WPA or WPA2). UDP was chosen because it offers several advantages over more secure mechanisms for data transmission (e.g. TCP), such as simplicity, increased transmission speeds, low latency, reduced package size, and connectionless communication. The sensing nodes in monitoring applications benefit from these features, achieving lower costs and lower energy consumption levels. The messages sent to the upper layers of the CPS consist in different fixed-size opcodes (operation codes), which are numerical codes describing node settings and measurement values [13]. These are pairs of numbers associated to a certain function, where the first number represents the function code and the second represents its value. The transmitted message components, represented as hexadecimal values, are presented in Table I.

TABLE I. Message Components

Function	Description	Example
00 00 00 50	device ID (last 8 values of physical address)	00 00 00 50 66 34 58 9D
00 00 00 0D	command count	00 00 00 0D 00 00 00 02 2 opcodes sent
00 00 00 01	sleep time	00 00 00 01 00 00 00 01 sleep time of 1 minute
00 00 04 84	value measured by digital probe 0	00 00 04 84 00 EE 00 F4 T=25.5°C, RH=24.4%

The central processing unit of the PSoC used, a CY8C3246PVI-147 chip, is an 8-bit single cycle pipelined 8051 processor, running at 24MHz. The chip also includes an EEPROM, where the parameters needed for the correct operation of the node are stored. This information is saved in the non-volatile memory because it is used when the system is switched on, for configuring the components. The operation state flow diagram of the device, showing the main performed actions, is presented in Figure 3.

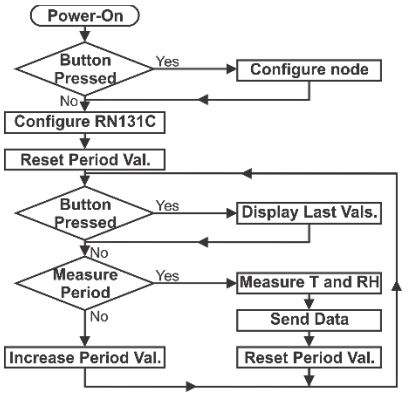

Figure 3. Node operation flow diagram

The device interface includes two buttons, used for the reset operation and for activating the display and showing the last recorded values, respectively. By powering-on or resetting the node while the button is pressed, an application which allows the configuration over the RS-232 interface is launched. It provides a menu for entering and displaying the entire set of parameters for the correct operation of the node: the period between measurements, connectivity information (channel, SSIDs, passwords), the information related to the data server (port, IP, gateway, subnet mask) and the node IP. After this, the device configures the attached RN131C module using the information in the non-volatile memory. When configured and reset, it automatically connects to one available wireless network and acts as a pipe, sending the data received over UART to the server. Most of the time it is put in sleep mode by the PSoC, and is woken up through the reset signal at the time it has to send a message. These last operations take place inside a loop without a stop condition. Here, the device periodically measures the temperature and humidity and sends the data over Wi-Fi to the specified server. During all this time, the LCD is inactive and it will display the last recorded values only when the button is pressed.

Being a duty cycled system, the operating period of the node depends on the transmission rate and on the ratio between wakeup and sleep times, which can take values between 1:30 and 1:600. A number of one to 10 samples an hour can be sent by the device, leading to a period of one to three years of operation using a single CR123A 3 V battery. The design of the wireless sensing node and the use of alternating wakeup and sleep periods leads to a power consumption between one and two hundred microwatts. During running time, lasting for a few seconds, the consumed current lies between 4 mA and 8 mA, depending on the completed tasks: boot, read data from the attached sensor, send data or display values. The maximum current is consumed by the Wi-Fi module, when it associates to the AP and transmits data, with a value of 150 mA during a period between 5 ms and 10 ms. While in sleep mode, the active components of the node, the PSoC microcontroller, the Wi-Fi module and the DC/DC source, consume around 20 μA. There is a separate source powering the attached sensors, which can be turned off. For further reducing the power profile of the sensor node, an unidirectional communication scheme was implemented, the device only sending short messages between previously set time intervals. The design of the node is portable on a wide range of PSoC chips and is scalable depending on application requirements, a wide range of devices with the same footprint being available.

IV. Intelligent Decision System

Environmental monitoring is based on data acquired by sensor nodes and on sets of rules for making decisions in the presence of issues, including dependability and security ones. This section of the paper presents the proposed information-centric architecture of the CPS.

A. CPS Middle Layer

The middle layer of the CPS meets the functions:

- Stores the data acquired by the CPS bottom layer;
- Provides decisions for the CPS monitoring tasks, ensuring system dependability and security;
- Performs complex analysis required by a third party (end-users).

In order to achieve these functions, the following components are proposed: a database containing the measurements provided by the wireless sensor nodes, stored on a database management server; a knowledge base (ontology) used to provide decisions and negotiation rules to model the CPS behaviour in terms of cyber, physical and human aspects; a multi-agent society with cooperation and negotiation capabilities supporting autonomous, reactive and targeted problem solving to monitor the CPS and to provide analysis results to the end-users.

The multi-agent approach allows the development of software entities capable of acting with a certain degree of autonomy in order to complete tasks. Agents include features suitable for implementing the CPS middle layer functions. In the multi-agent approach there is no global control system: data is decentralized and each agent has incomplete sets of information to solve specific tasks. The CPS multi-agent society is composed of:

- Collector Agents (CAs) – store the sensing data into the measurements database based on opcode interpretation;
- Negotiation Agent (NeA) – decides (negotiates) in case of possible conflicts that may appear between similar pieces of information sent by the WSIG Agent;
- Processing Data Agent (PDA) – processes and validates the data received from the physical nodes;
- Diagnostic Agent (DA) – tests and diagnoses the system based on the ontology;
- Ontology Manager Agent (OMA) – distributes copies of the ontology to requesting agents (PDA and DA) and informs committing agents of changes in ontology.

The multi-agent society can be deployed on the JADE platform, due to its facilities regarding communication, mobility, security, use of ontologies, and web services [14].

B. *CPS Top Layer*

The top layer of the CPS meets the functions:

- Provides environmental monitoring and data analyses web services to the end-users (Software as a Service – SaaS);
- Provides dedicated client applications to access the web services (WSs).

The environmental monitoring and data analyses web services use the Simple Object Access Protocol (SOAP) and Web Service Definition Language (WSDL) to access the measurement data. The most straightforward solution for the web services methods requests is a web portal, which links the measurement data to client applications. Client applications with monitoring and management features, dedicated to different categories of end-users, have to be developed for efficient and customized data exchange and also for testing the web services. Different categories of end-users involve the definition of diverse levels of access. Depending on the data access method used, access restrictions have to be put in place, together with solutions for data protection: a password management system and/or a challenge-response encrypted mechanism for the web portal and WS-Security (on SOAP) for web services.

Using the JADE add-on, the Web Service Integration Gateway (WSIG) and its specific elements, the WSIG Agent and WSIG Servlet, the CPS multi-agent society interacts with web services invoked by end-users through the client applications [15]. An overview of the CPS top and middle layers is presented in Figure 4.

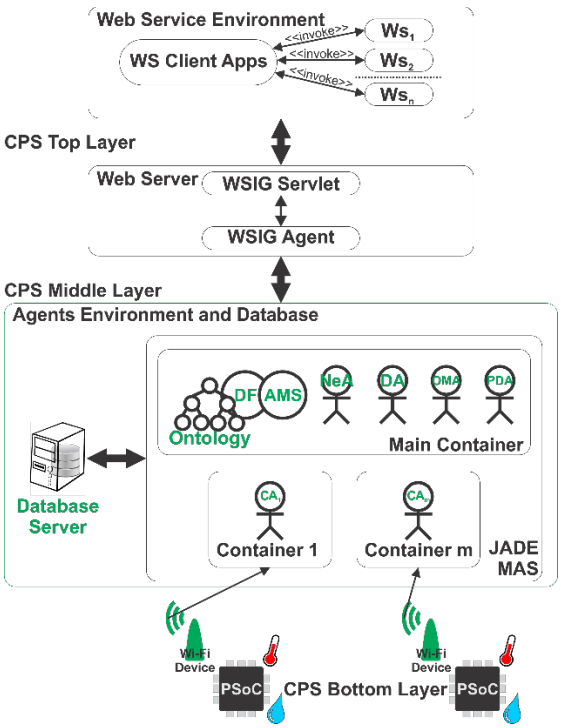

Figure 4. Cyber-physical system architecture

V. Conclusion and Future Work

The paper discusses the architecture of a CPS that monitors the real-time environmental status, based on the WSN, multi-agent and cloud computing technologies. The proposed architecture follows the CPSs paradigm and uses an information-centric perspective, providing several advantages: the possibility of using the existent Wi-Fi communication infrastructure, proper operation in dynamically changing environments and a high degree of flexibility and scalability.

The bottom layer has been implemented and tested, while the upper layers development represents the next step in achieving the complete CPS solution. Also, the integration of other types of sensors within the physical nodes and the completion of the multi-agent society with specific agents to ensure the CPS control represent objectives for future work.

References

[1] T. Sanislav and L. Miclea, "Cyber-Physical Systems - Concept, Challenges and Research Areas," *Journal of Control Engineering and Applied Informatics*, vol. 14, no. 2, pp. 28–33, 2012.

[2] F.-J. Wua, Y.-F. Kaob, and Y.-C. Tseng, "From Wireless Sensor Networks towards Cyber Physical Systems," *Pervasive and Mobile Computing*, vol. 7, no. 4, pp. 397–413, 2011.

[3] D. Larios, J. Barbancho, G. Rodriguez, J. Sevillano, F. Molina, and C. Leon, "Energy efficient wireless sensor network communications based on computational intelligent data fusion for environmental monitoring," *Communications, IET*, vol. 6, no. 14, pp. 2189–2197, September 2012.

[4] M. Hulea, G. Mois, S. Folea, L. Miclea, and V. Biscu, "Wi-sensors: A low power Wi-Fi solution for temperature and humidity measurement," in *Industrial Electronics Society, IECON 2013 - 39th Annual Conference of the IEEE*, Nov 2013, pp. 4011–4015.

[5] H.-C. Lin, Y.-C. Kan, and Y.-M. Hong, "The comprehensive gateway model for diverse environmental monitoring upon wireless sensor network," *Sensors Journal, IEEE*, vol. 11, no. 5, pp. 1293–1303, 2011.

[6] M. Gard, "A status report on environmental monitoring," in *Instrumentation and Measurement Technology Conference, 2001. IMTC 2001. Proceedings of the 18th IEEE*, vol. 3, 2001, pp. 1838–1841.

[7] G. Denker, N. Dutt, S. Mehrotra, M.-O. Stehr, C. Talcott, and N. Venkatasubramanian, "Resilient dependable cyber-physical systems: a middleware perspective," *Journal of Internet Services and Applications*, vol. 1, no. 1, 2010.

[8] D. Talia, "Cloud Computing and Software Agents: Towards Cloud Intelligent Services," in *WOA, volume 741 of CEUR Workshop Proceedings*, 2011, pp. 2–6.

[9] M. Lazarescu, "Design of a WSN platform for long-term environmental monitoring for IoT applications," *Emerging and Selected Topics in Circuits and Systems, IEEE Journal on*, vol. 3, no. 1, pp. 45–54, 2013.

[10] Cypress Semiconductor, "Programmable System-on-Chip," http://www.cypress.com/psoc/.

[11] Aosong Electronics Co. Ltd, *Digital-output relative humidity & temperature sensor/module DHT22 (DHT22 also named as AM2302)*, Aosong Electronics Co.,Ltd.

[12] Roving Networks, *RN-131G & RN-131C 802.11 b/g Wireless LAN Module*, Roving Networks, 2012, www.rovingnetworks.com.

[13] S. Folea and M. Ghercioiu, *Radio Frequency Identification Fundamentals and Applications Design Methods and Solutions*. InTech, 2010, ch. Tag4M, a Wi-Fi RFID Active Tag Optimized for Sensor Measurements, DOI: 10.5772/7984.

[14] F. Bellifemine, G. Caire, and et al., *Software Agent-Based Application, Platforms and Development Kits*. Birkhuser Basel, 2005, ch. The JADE Platform and Experiences with Mobile MAS Applications, pp. 1–21.

[15] JADE Board, *JADE Web Services Integration Gateway (WSIG) Guide*, March 2013.