POLITECNICO DI TORINO
Repository ISTITUZIONALE

Efficient Frequency Doubling at 399nm

Original
Efficient Frequency Doubling at 399nm / Pizzocaro, Marco; Davide, Calonico; Pablo Cancio, Pastor; Jacopo, Catani; Costanzo, Giovanni Antonio; Filippo, Levi; Luca, Lorini. - In: APPLIED OPTICS. - ISSN 1559-128X. - STAMPA. - 53:16(2014), pp. 3388-3392. [10.1364/AO.53.003388]

Availability:
This version is available at: 11583/2527286 since: 2016-01-26T11:15:13Z

Publisher:
OSA - Optical Society of America

Published
DOI:10.1364/AO.53.003388

Terms of use:

This article is made available under terms and conditions as specified in the corresponding bibliographic description in the repository

Publisher copyright
Optica Publishing Group (formely OSA) postprint/Author's Accepted Manuscript

"© 2014 Optica Publishing Group. One print or electronic copy may be made for personal use only. Systematic reproduction and distribution, duplication of any material in this paper for a fee or for commercial purposes, or modifications of the content of this paper are prohibited."

(Article begins on next page)

12 October 2024

Efficient Frequency Doubling at 399 nm

Marco Pizzocaro,[1,2,*] Davide Calonico,[2] Pablo Cancio Pastor,[3,4]
Jacopo Catani,[3,4] Giovanni A. Costanzo,[1] Filippo Levi,[2] and Luca Lorini[2]

[1] *Politecnico di Torino, Dipartimento di Elettronica e Telecomunicazioni, C.so duca degli Abruzzi 24, 10125 Torino, Italy*
[2] *Istituto Nazionale di Ricerca Metrologica (INRIM), Str. delle Cacce 91, 10135 Torino, Italy*
[3] *Istituto Nazionale di Ottica (INO-CNR), Via Nello Carrara, 1, 50019 Sesto Fiorentino, Italy*
[4] *European Laboratory for Non-Linear Spectroscopy (LENS), Via Nello Carrara, 1, 50019 Sesto Fiorentino, Italy*

(Dated: January 22, 2014)

We describe a high-power and narrow-linewidth laser source at 399 nm useful for cooling and trapping of ytterbium atoms. A continuous-wave titanium-sapphire laser at 798 nm is frequency doubled using a lithium triborate crystal in an enhancement cavity. Up to 1.0 W of light at 399 nm has been obtained from 1.3 W of infrared light, with an efficiency of 80 %.

Ytterbium holds interest for several atomic physics experiments because it is easy to cool and trap and has seven stable isotopes. Such experiments include optical frequency standards [1], non-conservation measurement [2], Bose-Einstein condensation [3], degenerate Fermi gases [4], bosonic-fermionic systems [5], and quantum information [6]. Ytterbium atoms can be cooled at millikelvin temperature using a magneto-optical trap (MOT) on the strong blue transition $^1\mathrm{S}_0-^1\mathrm{P}_1$ at 399 nm. Microkelvin temperatures can be achieved with a MOT on the narrower intercombination transition $^1\mathrm{S}_0-^3\mathrm{P}_1$ at 556 nm. In practical cases the 556 nm MOT needs needs a loading stage that uses 399 nm radiation. For fast loading time the 556 nm MOT is loaded starting from the 399 nm MOT. For maximum atomic density the 556 nm MOT can be directly loaded exploiting a Zeeman slower based on the 399 nm transition. The blue $^1\mathrm{S}_0-^1\mathrm{P}_1$ transition has a saturation intensity of 60 mW/cm^2. The laser radiation power limit the full exploitation of the cooling process until all beams reach the saturation. So, a reliable and powerful laser source at 399 nm is important for efficient trapping and cooling of ytterbium.

In this paper we present a high-power and narrow-linewidth laser source at 399 nm used for a ytterbium optical frequency standard experiment developed at Istituto Nazionale di Ricerca Metrologica (INRIM). Even if indium gallium nitride (InGaN) diode lasers can emit at 399 nm [7] their availability at this wavelength is limited because manufacturers concentrates on the close 405 nm wavelength of Blu-ray Discs. As well, their power is typically less than 50 mW. The best choice to get a power boosted coherent source at such wavelength is the second harmonic generation (SHG) in a nonlinear crystal. Some SHG sources are commercially available, but with limited power. The SHG at 399 nm of a 798 nm titanium-sapphire (Ti:sapphire) laser in a lithium triborate (LBO) crystal achieves high power, stability and tunability [8–12]. Another popular choice for the SHG of blue light is periodically-poled potassium titanyl phosphate (PPKTP) that can achieve high conversion efficiency [13]. Even if PPKTP is better suited for a low-power blue source, since it is more efficient, the wavelength 399 nm is at the edge of its transparency range (350 nm to 4400 nm) and photo-refractive effects at 399 nm make it unsuitable for SHG at high power. LBO is transparent from 160 nm to 2600 nm and initial studies performed at the Istituto Nazionale di Ottica (INO-CNR) and European Laboratory for Non-Linear Spectroscopy (LENS) showed that it is free of thermal effects from absorption at 399 nm. We show that 1.0 W of blue light at 399 nm can be generated from 1.3 W of infrared light using a LBO crystal in an enhancement cavity.

I. SECOND HARMONIC GENERATION WITH ENHANCEMENT CAVITY

LBO crystals allow only birrefringent phase-matching for SHG because they are not ferroelectric. Both crystal temperature and orientation tuning can be performed for phase matching. Angle-tuned phase-matching is preferrable in practice because of the high temperature values required for temperature tuning at these wavelengths. We perform type I critical phase-matching taking into account the walk-off angle ρ between the fundamental and duplicated waves.

The second harmonic power is $P_3 = E_{\mathrm{nl}} P_1^2$, where P_1 is the pump power on the crystal at the fundamental wavelength. The non-linear coefficient E_{nl} can be calculated for Gaussian beams by the Boyd and Kleinman formula [14] that in the International System (SI) units is [15]

$$E_{\mathrm{nl}} = \frac{16\pi^2 d_{\mathrm{eff}}^2 l}{\epsilon_0 c \lambda_1^3 n_3 n_1} \mathrm{e}^{-\alpha' l} h_{\mathrm{m}}(B, \xi), \tag{1}$$

where d_{eff} is the effective non-linear coefficient of the crystal for SHG, l is the length of the crystal, n_1 and n_3 are the index of refraction for the fundamental and duplicated frequencies respectively, and α' accounts for absorption of the fundamental (α_1) and of the second

* Author to whom correspondence should be addressed. Electronic mail: m.pizzocaro@inrim.it

TABLE I. Properties of LBO crystal for SHG from 798 nm to 399 nm.

Parameter		
Nonlinear coefficient	d_{eff}	0.75×10^{-12} m/V
Cutting angles	θ	90°
	ϕ	31.8°
Walk-off angle	ρ	0.0162 rad
Ord. index of refr. at 798 nm	$n_{\mathrm{o}}(\omega_1)$	1.611
Extr. index of refr. at 399 nm	$n_{\mathrm{e}}(\omega_3)$	1.611

harmonic (α_3) $\alpha' = \alpha_1 + \alpha_3/2$. The function $h_{\mathrm{m}}(B, \xi)$ (Boyd-Kleinman factor) accounts for the walk-off angle ρ ($B = \rho\sqrt{\pi l/2\lambda_1}$) and the focusing of the Gaussian beam $\xi = 2l/z_{\mathrm{R}}$, where $z_{\mathrm{R}} = \pi w_0^2/\lambda_1$ is the Rayleigh range of the Gaussian mode of the fundamental wavelength λ_1 and w_0 is its beam waist radius. Depending on B, h_{m} has a maximum for ξ between 1.39 and 2.64. Table I summarizes some properties of LBO for the SHG at 399 nm [16]. We estimated $\alpha_3 \approx 3.1 \times 10^{-1}\,\mathrm{m}^{-1}$ (from the coefficient between 351 nm to 364 nm) and $\alpha_1 \approx 3.5 \times 10^{-2}\,\mathrm{m}^{-1}$ (from the coefficient at 1064 nm). Calculations lead to $B = 3.53$ and the Boyd-Kleinman factor of Eq. (1) has a maximum of $h_{\mathrm{m}} = 0.2$ for $\xi = 1.5$ [14]. For a crystal length $l = 15$ mm this corresponds to an optimal waist radius $w_0 = \sqrt{z_{\mathrm{R}}\lambda_1/\pi} = 35$ µm. Then Eq. (1) predicts a non-linear coefficient $E_{\mathrm{nl}} = 7.5 \times 10^{-5}\,\mathrm{W}^{-1}$.

The power circulating in the enhancing cavity at the fundamental wavelength P_{c} depends on the power injected in the cavity P_{in} as [17]

$$P_{\mathrm{c}} = \frac{P_{\mathrm{in}} T_1}{\left[1 - \sqrt{(1-T_1)(1-l_{\mathrm{cav}})(1-E_{\mathrm{nl}}P_{\mathrm{c}})}\right]^2}, \qquad (2)$$

where T_1 is the transmission of the input coupler of the cavity and l_{cav} is the linear loss in the cavity. The SHG power is then $P_{\mathrm{out}} = E_{\mathrm{nl}} P_{\mathrm{c}}^2$. From Eq. (2) the circulating power P_{c} is maximized choosing an input coupler with transmission

$$T_1 = \frac{l_{\mathrm{cav}}}{2} + \sqrt{\frac{l_{\mathrm{cav}}^2}{4} + E_{\mathrm{nl}} P_{\mathrm{in}}}. \qquad (3)$$

We initially estimated $l_{\mathrm{cav}} \approx 4 \times 10^{-3}$ from the specifications of crystal and mirrors coatings. Assuming $P_{\mathrm{in}} = 1.2$ W we choose the input coupler with a transmission $T_1 = 1.2$ %.

II. EXPERIMENTAL SETUP

The 798 nm source is a Ti:sapphire laser pumped by a 8 W solid state pump laser at 532 nm. It can be tuned from 700 nm to 970 nm and it has an output power of 1.3 W at 798 nm with a linewidth < 20 kHz.

Our LBO crystal is $l = 15$ mm long, has a section of 3 mm × 3 mm and it is made by Raicol. It is cut for normal incidence at the phase-matching angle (cutting angles $\theta = 90°$ and $\phi = 31.8°$) and has anti-reflection coating on the faces for both wavelengths, $R(798\,\mathrm{nm}) < 0.1$ % and $R(399\,\mathrm{nm}) < 0.3$ %.

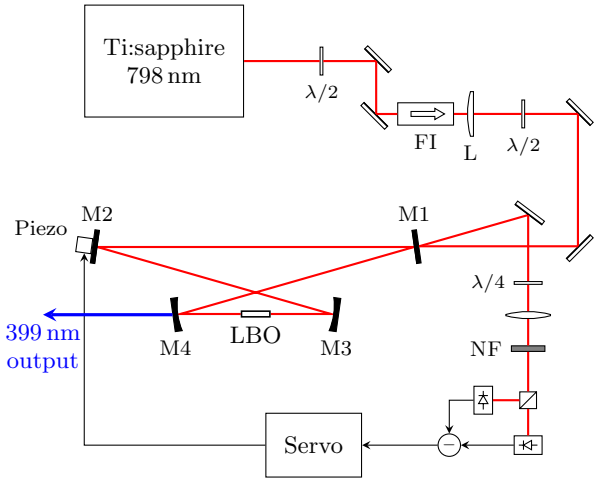

FIG. 1. Block scheme of the SHG setup. FI: Faraday Isolator. L: mode matching lens. M1–M4: cavity mirrors. NF: neutral density filter.

To increase the output power at 399 nm the crystal is placed in a bow-tie enhancement cavity, resonant at 798 nm. The optical setup is sketched in Fig. 1. The LBO crystal is held by a copper mounting on a rotational stage. The crystal works at room temperature and its temperature is not actively stabilized. The two mirrors close to the crystal (M3 and M4 in the figure) are concave with a radius of curvature $r = 100$ mm (see details in Fig. 2). The input coupler M1 and mirror M2 are flat. The total length of the cavity is 715 mm, the free spectral range is 420 MHz, and the distance between the curved mirrors is 114 mm. The angle of incidence of the beam on the mirrors (folding angle) is $\alpha = 8°$. It is as small as possible to limit the astigmatism caused by the tilted curved mirrors. This geometry leads to a beam waist inside the crystal of 35 µm as calculated by $ABCD$ matrix formalism [18] that is the optimal value for the Boyd-Kleinman factor.

The secondary waist between M1 and M2 is slightly elliptical, the waist radius in the horizontal and vertical direction are calculated to be $w_{2x} = 261$ µm and $w_{2y} = 295$ µm. The light from the Ti:sapphire laser is coupled to this waist using a single mode-matching lens (focal length $f = 400$ mm). A Faraday isolator prevents reflections on the laser. The input polarization is vertical. The resulting output at 399 nm is horizontally polarized.

The nominal reflectivity of the input coupler M1 is $R_1 = 98.8$ % and the nominal transmission is $T_1 = 1.2$ %. Mirrors M2 and M3 are high-reflection coated at 798 nm (R_2 and $R_3 > 99.9$ %). The output coupler M4 is coated for high-reflection at 798 nm and anti-reflection at 399 nm ($R_4(399\,\mathrm{nm}) = 0.95$).

For maximum stability and simplicity in the alignment

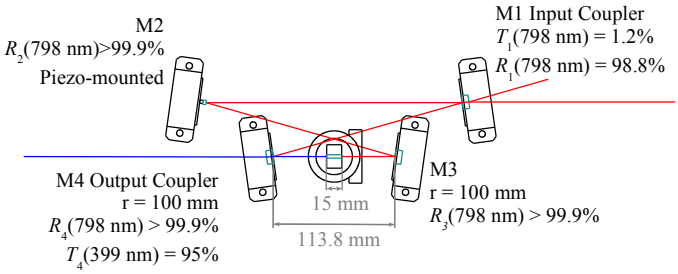

FIG. 2. Draw of the cavity for the SHG of 399 nm with the LBO crystal.

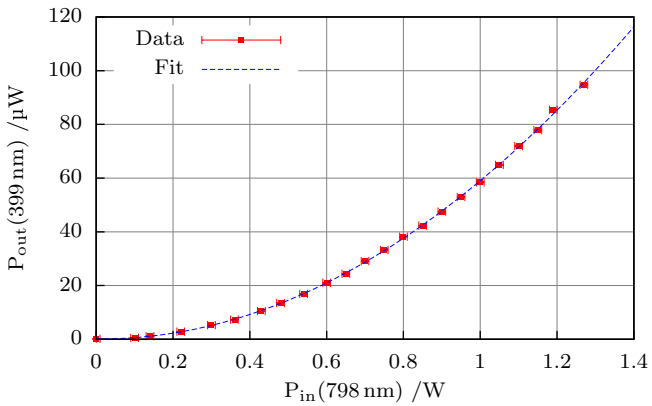

FIG. 3. SHG power from the LBO crystal used in single pass, at the output of the crystal.

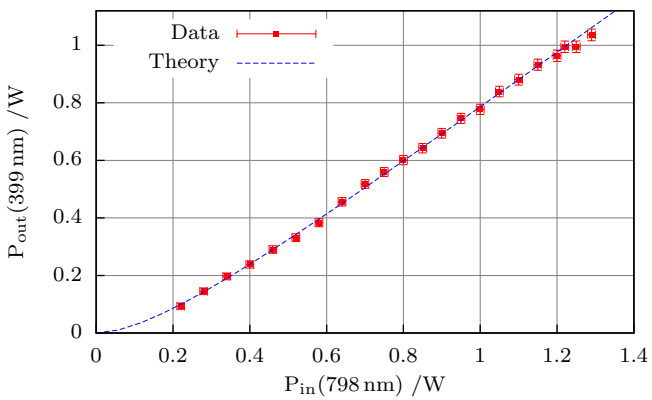

FIG. 4. SHG power out of the cavity as a function of input power. Last two data points are obtained increasing the power of the Ti:sapphire pump above the normal value of 8.0 W. The line is theoretically calculated for $E_{\rm nl} = 6.0 \times 10^{-5}\,{\rm W}^{-1}$, $T_1 = 1.32 \times 10^{-2}$ and $l_{\rm cav} = 9.7 \times 10^{-4}$.

we mounted the mirrors on top-actuated mounts placed on a monolithic block of aluminum. The blue light assists chemical reactions in dust particles that may damage the crystal surfaces. Moreover LBO crystals are reported to be degraded by humidity [11]. Studies of the cavity performances done at INO-CNR and LENS has shown the importance of air-tight environment in order to achieve long life operation. A similar setup at INO-CNR and LENS has the entire cavity under vacuum, and it has been operated for more than two years without degradation (pump input power 1 W, output power 0.6 W). At INRIM the cavity is closed in an air-tight aluminum box to prevent contamination of the optics by dust, but it is not under vacuum for simplicity. Silica-gel is put in the box to reduce humidity even if we did not observed degradation from the 50 % relative humidity in the lab. We have observed no degradation of the SHG for the last 6 months of operations under these conditions.

The flat mirror M2 is mounted on a small piezoelectric actuator (3 mm × 3 mm) to lock the cavity on the Ti:sapphire laser with the Hänsch-Couillaud technique [19]. The piezo spans about 6 free spectral ranges of the cavity (∼ 2.5 GHz of the fundamental). In the Hänsch-Couillaud technique the LBO crystal is the polarizing element inside the cavity. The half-waveplate in front of the cavity is rotated to give a small angle to the polarization of the incident radiation with respect to axis of the crystal. The reflection from the input coupler is attenuated by a beam-sampler and a neutral density filter and the Hänsch-Couillaud signal is obtained by a polarization analyzer (quarter-waveplate and polarizing cube). A servo keeps the cavity on resonance with the laser frequency with a bandwidth of 10 kHz. We observed that a reliable lock requires good optical isolation of the pump (> 30 dB), wheter the pump is a Ti:sapphire or an amplified diode laser.

III. RESULTS

We measured all the relevant properties for the conversion in the cavity. The single-pass conversion was measured replacing the input coupler M1 with an anti-reflection coated window. From a quadratic fit of the output power at 399 nm we obtained a nonlinear conversion efficiency $E_{\rm nl} = 6.0(1) \times 10^{-5}\,{\rm W}^{-1}$ for the power just outside the crystal surface (see Fig. 3). This value is 80 % of the theoretical value. The linear losses in the cavity were directly measured from the finesse after replacing the input coupler M1 with a high-reflection coated mirror. The finesse resulted $\mathcal{F} = 6500(100)$ and the linear losses $l_{\rm cav} = 9.7(1) \times 10^{-4}$. The transmission of the input coupler M1 is $T_1 = 1.32(2)$ %.

Figure 4 shows experimental data for the SHG power at 399 nm as a function of the input power. The blue output was measured after two lenses and a window considering a total propagation transmission of 94 %. A narrowband blue filter (transmission at 399 nm 42 % and at 798 nm $< 1 \times 10^{-5}$) was used to stop the leaking infrared light. Without filter the power of the leaking infrared light is about 3 % of the measure of the output power (after 3 optical elements coated for the blue). The output is $P_{\rm out} = 0.99(2)$ W with an input power

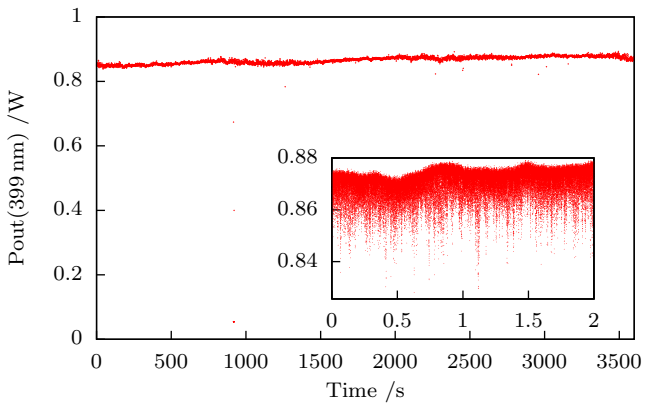

FIG. 5. Power output of the SHG as a function of time. Inset shows a detail at short time-scales.

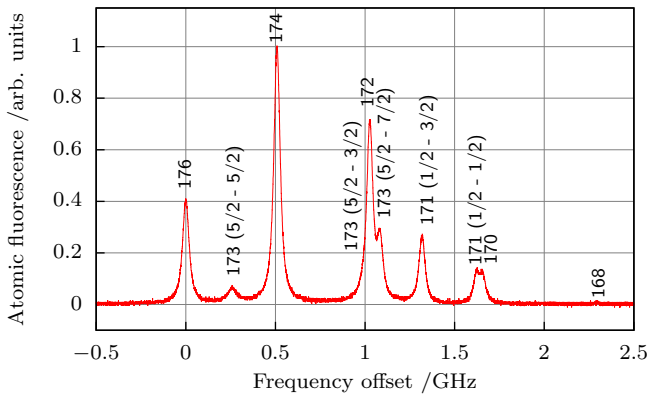

FIG. 6. Spectrum of ytterbium transition in a single sweep of the Ti:sapphire frequency. Isotope mass numbers (hyperfine transitions for odd isotopes) label each resonance.

$P_{\rm in} = 1.21(1)$ W. Increasing the power of the Ti:sapphire pump from 8.0 W to 8.5 W allowed for an input power of $P_{\rm in} = 1.29(1)$ W and an output of $P_{\rm out} = 1.04(2)$ W. The maximum observed efficiency is $\epsilon = P_{\rm out}/P_{\rm in} = 81(2)\,\%$ for $P_{\rm in} = 1.22$ W.

The same figure shows also the theoretical prediction from the measured values of the nonlinear conversion efficiency, cavity linear losses, and input coupler transmission. A numerical, self-consistent algorithm has been used to compute the power circulating in the cavity as in Eq. (2) and then the output power. From the measured values of $E_{\rm nl}$ and $l_{\rm cav}$ the optimal input coupler transmission is $T_{\rm opt} = 0.93\,\%$, as calculated from Eq. (3). The same theory predicts that replacing our input coupler with one with optimal transmission should result in a relative increase of the output power for $P_{\rm in} = 1.2$ W below 3 %.

The walk-off angle ρ and the bow-tie cavity make the blue beam astigmatic and elliptical. The 399 nm beam is reshaped by two cylindrical lenses and then it is collimated by a single spherical lens.After frequency-shifting using acousto-optic modulators we coupled the blue light in two polarization-maintaining fibers with 3.5 µm core. We achieved a coupling efficiency up to 72 % using two lenses for mode-matching.

Figure 5 shows the output power of the SHG on the long term (1 hour) and on the short term (2 s). On the short term the amplitude noise is due to the residual frequency noise of the Hänsch-Couillaud locking. When the cavity is properly locked the relative amplitude noise (root mean square) is below 1 % measured with a 25 kHz bandwidth (Fig. 5). On the long term the laser power shows good stability, with relative fluctuations of $\sim 4\,\%$ in few hours.

To cope for the long term frequency drift the laser is locked to the ytterbium $^1\mathrm{S}_0 - ^1\mathrm{P}_1$ transition by transverse spectroscopy on a thermal ytterbium beam. The spectroscopy of atomic transition is shown in Fig. 6, as the Ti:sapphire laser is scanned for 1.5 GHz. All stable isotopes of ytterbium are observed when the blue is tuned around a frequency of 751.524 THz. We have tuned the blue frequency in a 280 GHz range (from 751.36 THz to 751.64 THz) without realignment of the optics and with a relative decrease in power of 10 % for the higher frequencies. The source at 399 nm is now used for a MOT, for a slower beam, and for a resonant probe beam in the INRIM optical frequency standard experiment [20].

IV. CONCLUSIONS

We have presented a reliable, powerful, single-frequency laser source at 399 nm based on the SHG in a LBO crystal using an enhancement cavity. A second harmonic power of 1.0 W outside the cavity was achieved from 1.22 W of infrared light. In atomic physics experiments with ytterbium atoms, the 399 nm source is a key component for the cooling and trapping on the strong $^1\mathrm{S}_0 - ^1\mathrm{P}_1$ transition. This 399 nm source is well suited for this role being high-power and inheriting the narrow linewidth and tunability of the Ti:sapphire pump. LBO proved to be reliable at 399 nm even for high power. The setup described here has been used without degradation of the crystal for 6 months at INRIM while a similar setup with the crystal under vacuum and an output of 0.6 W has been used for two years at INO-CNR and LENS.

V. ACKNOWLEDGMENT

The authors would like to acknowledge L. Fallani for careful reading, E. K. Bertacco for help with electronics and, A. Barbone, M. Bertinetti, and V. Fornero for technical help. The authors acknowledge for funding the European Metrology Research Programme (EMRP) Project SIB55-ITOC, the European Reserch Council (ERC) Advanced Grant DISQUA, the European Union 126 FP7 Integrated Project SIQS and the European Union FP7 integrated infrastructure initiative Laserlab Europe. The

EMRP is jointly funded by the EMRP participating countries within EURAMET and the European Union.

[1] N. Hinkley, J. A. Sherman, N. B. Phillips, M. Schioppo, N. D. Lemke, K. Beloy, M. Pizzocaro, C. W. Oates, and A. D. Ludlow, Science **341**, 1215 (2013).
[2] D. DeMille, Phys. Rev. Lett. **74**, 4165 (1995).
[3] Y. Takasu, K. Maki, K. Komori, T. Takano, K. Honda, M. Kumakura, T. Yabuzaki, and Y. Takahashi, Phys. Rev. Lett. **91**, 040404 (2003).
[4] T. Fukuhara, Y. Takasu, M. Kumakura, and Y. Takahashi, Phys. Rev. Lett. **98**, 030401 (2007).
[5] K. Honda, Y. Takasu, T. Kuwamoto, M. Kumakura, Y. Takahashi, and T. Yabuzaki, Phys. Rev. A **66**, 021401 (2002).
[6] D. Hayes, P. S. Julienne, and I. H. Deutsch, Phys. Rev. Lett. **98**, 070501 (2007).
[7] C. Y. Park and T. H. Yoon, Phys. Rev. A **68**, 055401 (2003).
[8] C. Adams and A. Ferguson, Optics Communications **90**, 89 (1992).
[9] H. Kumagai, Y. Asakawa, T. Iwane, K. Midorikawa, and M. Obara, Appl. Opt. **42**, 1036 (2003).
[10] M. Scheid, F. Markert, J. Walz, J. Wang, M. Kirchner, and T. W. Hänsch, Opt. Lett. **32**, 955 (2007).
[11] Y.-H. Cha, K.-H. Ko, G. Lim, J.-M. Han, H.-M. Park, T.-S. Kim, and D.-Y. Jeong, Appl. Opt. **49**, 1666 (2010).
[12] G. Ferrari, J. Catani, L. Fallani, G. Giusfredi, G. Schettino, F. Schäfer, and P. Cancio Pastor, Opt. Lett. **35**, 3105 (2010).
[13] R. L. Targat, J.-J. Zondy, and P. Lemonde, Optics Communications **247**, 471 (2005).
[14] G. D. Boyd and D. A. Kleinman, J. Appl. Phys. **39**, 3597 (1968).
[15] W. P. Risk, T. R. Gosnell, and A. V. Nurmikko, *Compact Blue-Green Lasers* (Cambridge University Press, New York, 2003).
[16] A. V. Smith, "SNLO nonlinear optics code," (2009), http://www.as-photonics.com/SNLO.
[17] E. S. Polzik and H. J. Kimble, Opt. Lett. **16**, 1400 (1991).
[18] T. Freegarde and C. Zimmermann, Opt. Commun. **199**, 435 (2001).
[19] T. Hänsch and B. Couillaud, Opt. Commun. **35**, 441 (1980).
[20] M. Pizzocaro, F. Bregolin, D. Calonico, G. A. Costanzo, F. Levi, and L. Lorini, in *2013 Joint UFFC, EFTF and PFM Symposium* (2013) pp. 379–382.